LANCE R. LEFLEUR
DIRECTOR

ROBERT J. BENTLEY
GOVERNOR

Alabama Department of Environmental Management
adem.alabama.gov

1400 Coliseum Blvd. 36110-2400 ■ Post Office Box 301463
Montgomery, Alabama 36130-1463
(334) 271-7700 ■ FAX (334) 271-7950

OCT 2 1 2013

CERTIFIED MAIL 91 7108 2133 3935 0334 1927
RETURN RECEIPT REQUESTED

Sherrod B. Clarke, Jr.
Vice President & General Manager
Vulcan Construction Materials, LP
1200 Urban Center Drive
Birmingham, AL 35242

RE: Draft Permit
Gurley Quarry
NPDES Permit No. AL0075507
Madison County (089)

Dear Mr. Clarke:

Transmitted herein is a draft of the above referenced permit. Please review the enclosed draft permit carefully. Please submit any comments on the draft permit to the Department within 30 days from the date of receipt of this letter.

Since the Department has made a tentative decision to reissue the above referenced permit, ADEM Admin. Code r. 335-6-6-.21 requires a public notice of the draft permit in a local newspaper followed by a period of at least 30 days for public comment before the permit can be reissued.

The United States Environmental Protection Agency will also receive the draft permit for review during the 30-day public comment period.

Any mining, processing, construction, land disturbance, or other regulated activity proposed to be authorized by this draft permit is prohibited prior to the effective date of the formal permit. Any mining or processing activity within the drainage basin associated with each permitted outfall which is conducted prior to Departmental receipt of certification from a professional engineer licensed to practice in the State of Alabama, that the Pollution Abatement/Prevention Plan was implemented according to the design plan, or notification from the Alabama Surface Mining Commission that the sediment control structures have been certified, is prohibited.

Birmingham Branch
110 Vulcan Road
Birmingham, AL 35209-4702
(205) 942-6168
(205) 941-1603 (FAX)

Decatur Branch
2715 Sandlin Road, S. W.
Decatur, AL 35603-1333
(256) 353-1713
(256) 340-9359 (FAX)

Mobile Branch
2204 Perimeter Road
Mobile, AL 36615-1131
(251) 450-3400
(251) 479-2593 (FAX)

Mobile-Coastal
4171 Commanders Drive
Mobile, AL 36615-1421
(251) 432-6533
(251) 432-6598 (FAX)

The Alabama Department of Environmental Management encourages you to voluntarily consider pollution prevention practices and alternatives at your facility. Pollution Prevention may assist you in complying with effluent limitations, and possibly reduce or eliminate monitoring requirements.

Should you have any questions concerning this matter, please contact Whitney Bell by phone at (334) 271-7795 or by email at wnbell@adem.state.al.us.

Sincerely,

Catherine McNeill

Catherine McNeill, Chief
Mining and Natural Resource Section
Stormwater Management Branch
Water Division

CAM/wnb File: DPER/20157

Enclosure

cc: Whitney Bell, ADEM
Environmental Protection Agency Region IV
Alabama Department of Conservation and Natural Resources
U.S. Fish and Wildlife Service
Alabama Historical Commission
Advisory Council on Historic Preservation

Alabama Department of Environmental Management

NATIONAL POLLUTANT DISCHARGE ELIMINATION SYSTEM INDIVIDUAL PERMIT

PERMITTEE:	Vulcan Construction Materials, LP 1200 Urban Center Drive Birmingham, AL 35242
FACILITY LOCATION:	Gurley Quarry 5937 Highway 72 East Gurley, AL 35748 Madison County T4S, R2E, S2, 3, 10, & 11
PERMIT NUMBER:	AL0075507
DSN & RECEIVING STREAM:	001-1 Unnamed Tributary to Sand Branch 002-1 Hurricane Creek 003-1 Hurricane Creek 004-1 Unnamed Tributary to Hurricane Creek 005-1 Unnamed Tributary to Hurricane Creek 006-1 Unnamed Tributary to Hurricane Creek

In accordance with and subject to the provisions of the Federal Water Pollution Control Act, as amended, 33 U.S.C. §§1251-1378 (the "FWPCA"), the Alabama Water Pollution Control Act, as amended, ***Code of Alabama 1975****, §§ 22-22-1 to 22-22-14 (the "AWPCA"), the Alabama Environmental Management Act, as amended,* ***Code of Alabama 1975****, §§22-22A-1 to 22-22A-16, and rules and regulations adopted thereunder, and subject further to the terms and conditions set forth in this permit, the Permittee is hereby authorized to discharge into the above-named receiving waters.*

ISSUANCE DATE:

EFFECTIVE DATE:

EXPIRATION DATE:

**** DRAFT ****

Alabama Department of Environmental Management

MINING AND NATURAL RESOURCE SECTION
NATIONAL POLLUTANT DISCHARGE ELIMINATION SYSTEM (NPDES) PERMIT

TABLE OF CONTENTS

PART I DISCHARGE LIMITATIONS, CONDITIONS, AND REQUIREMENTS

A. DISCHARGE LIMITATIONS AND MONITORING REQUIREMENTS 4
1. Outfalls 001-1 and 003-1 through 006-1 4
2. Outfall 002-1 4

B. REQUIREMENTS TO ACTIVATE A PROPOSED MINING OUTFALL 5

C. DISCHARGE MONITORING AND RECORD KEEPING REQUIREMENTS 5
1. Sampling Schedule and Frequency 5
2. Measurement Frequency 5
3. Monitoring Schedule 6
4. Sampling Location 6
5. Representative Sampling 7
6. Test Procedures 7
7. Recording of Results 7
8. Routine Inspection by Permittee 8
9. Records Retention and Production 8
10. Monitoring Equipment and Instrumentation 9

D. DISCHARGE REPORTING REQUIREMENTS 9
1. Requirements for Reporting of Monitoring 9
2. Requirements for Outfall Certification Summary Submittal 10
3. Noncompliance Notification 11
4. Reduction, Suspension, or Termination of Monitoring and/or Reporting 12

E. OTHER REPORTING AND NOTIFICATION REQUIREMENTS 13
1. Anticipated Noncompliance 13
2. Termination of Discharge 13
3. Updating Information 13
4. Duty to Provide Information 13

F. SCHEDULE OF COMPLIANCE 14

PART II OTHER REQUIREMENTS, RESPONSIBILITIES, AND DUTIES

A. OPERATIONAL AND MANAGEMENT REQUIREMENTS 15
1. Facilities Operation and Management 15
2. Pollution Abatement and/or Prevention Plan 15
3. Best Management Practices (BMPs) 15
4. Biocide Additives 16
5. Facility Identification 17
6. Removed Substances 17
7. Loss or Failure of Treatment Facilities 17
8. Duty to Mitigate 17

B. BYPASS AND UPSET 17
1. Bypass 17
2. Upset 18

C. PERMIT CONDITIONS AND RESTRICTIONS 19
1. Prohibition against Discharge from Facilities Not Certified 19

2. Permit Modification, Suspension, Termination, and Revocation 20
3. Automatic Expiration of Permits for New or Increased Discharges 20
4. Transfer of Permit 21
5. Groundwater 21
6. Property and Other Rights 21

D. RESPONSIBILITIES 21
1. Duty to Comply 21
2. Change in Discharge 22
3. Compliance with Toxic or Other Pollutant Effluent Standard or Prohibition 22
4. Compliance with Water Quality Standards and Other Provisions 23
5. Compliance with Statutes and Rules 23
6. Right of Entry and Inspection 23
7. Duty to Reapply or Notify of Intent to Cease Discharge 24

PART III ADDITIONAL REQUIREMENTS, CONDITIONS, AND LIMITATIONS

A. CIVIL AND CRIMINAL LIABILITY 25
1. Tampering 25
2. False Statements 25
3. Permit Enforcement 25
4. Relief From Liability 25

B. OIL AND HAZARDOUS SUBSTANCE LIABILITY 25

C. AVAILABILITY OF REPORTS 25

D. DEFINITIONS 25

E. SEVERABILITY 30

F. PROHIBITIONS AND ACTIVIES NOT AUTHORIZED 30

G. DISCHARGES TO IMPAIRED WATERS 30

PART I DISCHARGE LIMITATIONS, CONDITIONS, AND REQUIREMENTS

A. DISCHARGE LIMITATIONS AND MONITORING REQUIREMENTS

1. Outfalls 001-1 and 003-1 through 006-1

During the period beginning on the effective date of this Permit and lasting through the expiration date of this Permit, the Permittee is authorized to discharge from Outfalls 001-1 and 003-1 through 006-1 which are identified on Page 1 of this Permit and described more fully in the Permittee's application, if the outfalls have been constructed and certified. Such discharges shall be limited and monitored by the Permittee as specified below:

Parameter	Discharge Limitations			Monitoring Requirements	
	Daily Minimum	Monthly Average	Daily Maximum	Sample Type	Measurement Frequency[1]
pH 00400	6.0 s.u.	-------	9.0 s.u.	Grab	2/Month
Solids, Total Suspended 00530	-------	25.0 mg/L	45.0 mg/L	Grab	2/Month
Flow, In Conduit or Thru Treatment Plant[2] 50050	-------	Report MGD	Report MGD	Instantaneous	2/Month

2. Outfall 002-1

During the period beginning on the effective date of this Permit and lasting through the expiration date of this Permit, the Permittee is authorized to discharge from Outfall 002-1 which is identified on Page 1 of this Permit and described more fully in the Permittee's application, if the outfall has been constructed and certified. Such discharges shall be limited and monitored by the Permittee as specified below:

Parameter	Discharge Limitations			Monitoring Requirements	
	Daily Minimum	Monthly Average	Daily Maximum	Sample Type	Measurement Frequency[1]
pH 00400	6.0 s.u.	-------	8.5 s.u.	Grab	2/Month
Solids, Total Suspended 00530	-------	25.0 mg/L	45.0 mg/L	Grab	2/Month
Flow, In Conduit or Thru Treatment Plant[2] 50050	-------	Report MGD	Report MGD	Instantaneous	2/Month

[1] See Part I.C.2. for further measurement frequency requirements.
[2] Flow must be determined at the time of sample collection by direct measurement, calculation, or other method acceptable to the Department.

B. REQUIREMENTS TO ACTIVATE A PROPOSED MINING OUTFALL

1. Discharge from any point source identified on Page 1 of this Permit which is a proposed outfall is not authorized by this Permit until the outfall has been constructed and certification received by the Department from a professional engineer, registered in the State of Alabama, certifying that such facility has been constructed according to good engineering practices and in accordance with the Pollution Abatement and/or Prevention (PAP) Plan.

2. Certification required by Part I.B.1. shall be submitted on a completed ADEM Form 432. The certification shall include the latitude and longitude of the constructed and certified outfall.

3. Discharge monitoring and Discharge Monitoring Report (DMR) reporting requirements described in Part I.C. of this Permit do not apply to point sources that have not been constructed and certified.

4. Upon submittal of the certification required by Part I.B.1. to the Department, all monitoring and DMR submittal requirements shall apply to the constructed and certified outfall.

C. DISCHARGE MONITORING AND RECORD KEEPING REQUIREMENTS

1. Sampling Schedule and Frequency

a. The Permittee shall collect at least one grab sample of the discharge to surface waters from each constructed and certified point source identified on Page 1 of this Permit and described more fully in the Permittee's application twice per month at a rate of at least every other week if a discharge occurs at any time during the two week period, but need not collect more than two samples per calendar month. Each sample collected shall be analyzed for each parameter specified in Part I.A. of this Permit.

b. If the final effluent is pumped in order to discharge (e.g. from incised ponds, old highwall cuts, old pit areas or depressions, etc.), the Permittee shall collect at least one grab sample of the discharge from each point source identified on Page 1 of this Permit and described more fully in the Permittee's application each quarterly (three month) monitoring period if a discharge occurs at any time during the quarterly monitoring period which results from direct pumped drainage. Each sample collected shall be analyzed for each parameter specified in Part I.A. of this Permit.

c. The Permittee may increase the frequency of sampling listed in Parts I.C.1.a and I.C.1.b; however, all sampling results must be reported to the Department and included in any calculated results submitted to the Department in accordance with this Permit.

2. Measurement Frequency

Measurement frequency requirements found in Part I.A. shall mean:

a. A measurement frequency of one day per week shall mean sample collection on any day of discharge which occurs every calendar week.

b. A measurement frequency of two days per month shall mean sample collection on any day of discharge which occurs every other week, but need not exceed two sample days per month.

c. A measurement frequency of one day per month shall mean sample collection on any day of discharge which occurs during each calendar month.

d. A measurement frequency of one day per quarter shall mean sample collection on any day of discharge which occurs during each calendar quarter.

e. A measurement frequency of one day per six months shall mean sample collection on any day of discharge which occurs during the period of January through June and during the period of July through December.

f. A measurement frequency of one day per year shall mean sample collection on any day of discharge which occurs during each calendar year.

3. Monitoring Schedule

The Permittee shall conduct the monitoring required by Part I.A. in accordance with the following schedule:

a. MONITORING REQUIRED MORE FREQUENTLY THAN MONTHLY AND MONTHLY shall be conducted during the first full month following the effective date of coverage under this Permit and every month thereafter. More frequently than monthly and monthly monitoring may be done anytime during the month, unless restricted elsewhere in this Permit, but the results should be reported on the last Discharge Monitoring Report (DMR) due for the quarter (i.e., with the March, June, September, and December DMRs).

b. QUARTERLY MONITORING shall be conducted at least once during each calendar quarter. Calendar quarters are the periods of January through March, April through June, July through September, and October through December. The Permittee shall conduct the quarterly monitoring during the first complete calendar quarter following the effective date of this Permit and is then required to monitor once during each quarter thereafter. Quarterly monitoring may be done anytime during the quarter, unless restricted elsewhere in this Permit, but the results should be reported on the last DMR due for the quarter (i.e., with the March, June, September, and December DMRs).

c. SEMIANNUAL MONITORING shall be conducted at least once during the period of January through June and at least once during the period of July through December. The Permittee shall conduct the semiannual monitoring during the first complete semiannual calendar period following the effective date of this Permit and is then required to monitor once during each semiannual period thereafter. Semiannual monitoring may be done anytime during the semiannual period, unless restricted elsewhere in this Permit, but it should be reported on the last DMR due for the month of the semiannual period (i.e., with the June and December DMRs).

d. ANNUAL MONITORING shall be conducted at least once during the period of January through December. The Permittee shall conduct the annual monitoring during the first complete calendar annual period following the effective date of this Permit and is then required to monitor once during each annual period thereafter. Annual monitoring may be done anytime during the year, unless restricted elsewhere in this Permit, but it should be reported on the December DMR.

4. Sampling Location

Unless restricted elsewhere in this Permit, samples collected to comply with the monitoring requirements specified in Part I.A. shall be collected at the nearest accessible location just prior to discharge and after final treatment, or at an alternate location approved in writing by the Department.

5. Representative Sampling

Sample collection and measurement actions taken as required herein shall be representative of the volume and nature of the monitored discharge and shall be in accordance with the provisions of this Permit.

6. Test Procedures

For the purpose of reporting and compliance, Permittees shall use one of the following procedures:

a. For parameters with an EPA established Minimum Level (ML), report the measured value if the analytical result is at or above the ML and report "0" for values below the ML. Test procedures for the analysis of pollutants shall conform to 40 CFR Part 136, guidelines published pursuant to Section 304(h) of the FWPCA, 33 U.S.C. Section 1314(h), and ADEM Standard Operating Procedures. If more than one method for analysis of a substance is approved for use, a method having a minimum level lower than the permit limit shall be used. If the minimum level of all methods is higher than the permit limit, the method having the lowest minimum level shall be used and a report of less than the minimum level shall be reported as zero and will constitute compliance, however should EPA approve a method with a lower minimum level during the term of this Permit the Permittee shall use the newly approved method.

b. For pollutant parameters without an established ML, an interim ML may be utilized. The interim ML shall be calculated as 3.18 times the Method Detection Level (MDL) calculated pursuant to 40 CFR Part 136, Appendix B.

   Permittees may develop an effluent matrix-specific ML, where an effluent matrix prevents attainment of the established ML. However, a matrix specific ML shall be based upon proper laboratory method and technique. Matrix-specific MLs must be approved by the Department, and may be developed by the Permittee during permit issuance, reissuance, modification, or during compliance schedule.

   In either case the measured value should be reported if the analytical result is at or above the ML and "0" reported for values below the ML.

c. For parameters without an EPA established ML, interim ML, or matrix-specific ML, a report of less than the detection limit shall constitute compliance if the detection limit of all analytical methods is higher than the permit limit using the most sensitive EPA approved method. For the purpose of calculating a monthly average, "0" shall be used for values reported less than the detection limit.

   The Minimum Level utilized for procedures identified in Parts I.C.6.a. and b. shall be reported on the Permittee's DMR. When an EPA approved test procedure for analysis of a pollutant does not exist, the Director shall approve the procedure to be used.

7. Recording of Results

For each measurement or sample taken pursuant to the requirements of this Permit, the Permittee shall record the following information:

a. The facility name and location, point source number, date, time, and exact place of sampling or measurements;

b. The name(s) of person(s) who obtained the samples or measurements;

c. The dates and times the analyses were performed;

d. The name(s) of the person(s) who performed the analyses;

e. The analytical techniques or methods used including source of method and method number; and

f. The results of all required analyses.

8. Routine Inspection by Permittee

a. The Permittee shall inspect all point sources identified on Page 1 of this Permit and described more fully in the Permittee's application and all treatment or control facilities or systems used by the Permittee to achieve compliance with the terms and conditions of this Permit at least as often as the applicable sampling frequency specified in Part I.C.1 of this Permit.

b. If required by the Director, the Permittee shall maintain a written log for each point source identified on Page 1 of this Permit and described more fully in the Permittee's application in which the Permittee shall record the following information:

(1) The date and time the point source and any associated treatment or control facilities or systems were inspected by the Permittee;

(2) Whether there was a discharge from the point source at the time of inspection by the Permittee;

(3) Whether a sample of the discharge from the point source was collected at the time of inspection by the Permittee;

(4) Whether all associated treatment or control facilities or systems appeared to be in good working order and operating as efficiently as possible, and if not, a description of the problems or deficiencies; and

(5) The name and signature of the person performing the inspection of the point source and associated treatment or control facilities or systems.

9. Records Retention and Production

a. The Permittee shall retain records of all monitoring information, including all calibration and maintenance records and all original strip chart recordings for continuous monitoring instrumentation, copies of all reports required by this Permit, and records of all data used to complete the above reports or the application for this Permit, for a period of at least three (3) years from the date of the sample collection, measurement, report, or application. This period may be extended by request of the Director at any time. If litigation or other enforcement action, under the AWPCA, AEMA, and/or the FWPCA, is ongoing which involves any of the above records, the records shall be kept until the litigation is resolved. Upon the written request of the Director, the Permittee shall provide the Director with a copy of any record required to be retained by this paragraph. Copies of these records should not be submitted unless requested.

b. All records required to be kept for a period of three (3) years shall be kept at the permitted facility or an alternate location approved by the Department in writing and shall be available for inspection.

10. Monitoring Equipment and Instrumentation

All equipment and instrumentation used to determine compliance with the requirements of this Permit shall be installed, maintained, and calibrated in accordance with the manufacturer's instructions or, in the absence of manufacturer's instructions, in accordance with accepted practices. The Permittee shall develop and maintain quality assurance procedures to ensure proper operation and maintenance of all equipment and instrumentation. The quality assurance procedures shall include the proper use, maintenance, and installation, when appropriate, of monitoring equipment at the plant site.

D. DISCHARGE REPORTING REQUIREMENTS

1. Requirements for Reporting of Monitoring

a. The Department is utilizing a web-based electronic environmental (E2) reporting system for submittal of DMRs. The E2 DMR system allows ADEM to electronically validate, acknowledge receipt, and upload data to the state's central wastewater database. This improves the accuracy of reported compliance data and reduces costs to both the regulated community and ADEM. If the Permittee is not already participating in the E2 DMR system, **the Permittee must apply for participation in the E2 DMR system within 180 days of the effective date of this permit unless valid justification as to why they cannot participate is submitted in writing. After 180 days, hard copy DMRs may be used only with written approval from the Department.** To participate in the E2 DMR system, the Permittee Participation Package may be downloaded online at https://e2.adem.alabama.gov/npdes. If the electronic environmental (E2) reporting system is down (i.e. electronic submittal of DMR data is unable to be completed due to technical problems originating with the Department's system; this could include entry/submittal issues with an entire set of DMRs or individual parameters), permittees are not relieved of their obligation to submit DMR data to the Department by the required submittal date. However, if the E2 system is down on the 28th day of the month or is down for an extended period of time as determined by the Department when a DMR is required to be submitted, the facility may submit the data in an alternate manner and format acceptable to the Department. Preapproved alternate acceptable methods include faxing, e-mailing, mailing, or hand-delivery of data such that they are received by the required reporting date. Within five calendar days of the E2 system resuming operation, the Permittee shall enter the data into the E2 reporting system unless an alternate timeframe is approved by the Department. An attachment should be included with the E2 DMR submittal verifying the original submittal date (date of the fax, copy of dated e-mail, or hand-delivery stamped date). If a permitttee is allowed to submit via the US Postal Service, the DMR must be legible and bear an original signature. Photo and electronic copies of the signature are not acceptable and shall not satisfy the reporting requirements of this Permit. If the Permittee, using approved analytical methods as specified in Part I.C.6. monitors any discharge from a point source identified on Page 1 of this Permit and describe more fully in the Permittee's application more frequently than required by this Permit; the results of such monitoring shall be included in the calculation and reporting of values on the DMR Form, and the increased frequency shall be indicated on the DMR Form. In the event no discharge from a point source identified on Page 1 of this Permit and described more fully in the Permittee's application occurs during a monitoring period, the Permittee shall report "No Discharge" for such period on the appropriate DMR Form.

b. The Permittee shall report "No Discharge During Quarterly Monitoring Period" on the appropriate DMR Form for each point source receiving pumped discharges pursuant to Part I.C.1.b. provided that no discharge has occurred at <u>any</u> time during the entire quarterly (three month) monitoring period.

c. Each DMR Form submitted by the Permittee to the Department in accordance with Part I.D.1.a. must be legible and bear an original signature or electronic signature. Photo and electronic copies of the signature are not acceptable and shall not satisfy the reporting requirements of this Permit.

d. All reports and forms required to be submitted by this Permit, the AWPCA, and the Department's rules and regulations, shall be signed by a "responsible official" of the Permittee as defined in ADEM Admin. Code r. 335-6-6-.09 or a "duly authorized representative" of such official as defined in ADEM Admin. Code r. 335-6-6-.09 and shall bear the following certification:

> "I certify under penalty of law that this document and all attachments were prepared under my direction or supervision in accordance with a system designed to assure that qualified personnel properly gather and evaluate the information submitted. Based on my inquiry of the person or persons who manage the system, or those persons directly responsible for gathering the information, the information submitted is, to the best of my knowledge and belief, true, accurate, and complete. I am aware that there are significant penalties for submitting false information, including the possibility of fine and imprisonment for knowing violations."

e. All DMRs, reports, and forms required to be submitted by this Permit, the AWPCA and the Department's rules and regulations, shall be addressed to:

> Alabama Department of Environmental Management
> Water Division, Mining and Natural Resource Section
> Post Office Box 301463
> Montgomery, Alabama 36130-1463

Certified and Registered Mail shall be addressed to:

> Alabama Department of Environmental Management
> Water Division, Mining and Natural Resource Section
> 1400 Coliseum Boulevard
> Montgomery, Alabama 36110-2059

f. Unless authorized in writing by the Department, approved reporting forms required by this Permit or the Department are not to be altered, and if copied or reproduced, must be consistent in format and identical in content to the ADEM approved form. Unauthorized alteration, falsification, or use of incorrectly reproduced forms constitutes noncompliance with the requirements of this Permit and may significantly delay processing of any request, result in denial of the request, result in permit termination, revocation, suspension, modification, or denial of a permit renewal application, or result in other enforcement action.

g. If this Permit is a reissuance, then the Permittee shall continue to submit DMRs in accordance with the requirements of their previous permit until such time as DMRs are due as discussed in Part I.D.1.a.

2. Requirements for Outfall Certification Summary Submittal

The Permittee shall submit a summary of outfalls identified on Page 1 of this Permit so that it is received by the Director with the required DMRs no later than the 28th day of the month following the quarterly reporting period (i.e., on the 28th day of January, April, July, and October of each year). This Outfall Certification Summary shall indicate whether each outfall identified on Page 1

of this Permit has been certified and, if so, it shall include the date for each certification as well as the latitude and longitude of the certified outfall. If any outfall identified on Page 1 of this Permit has been released from monitoring requirements as provided in Part I.D.4. of this Permit, then the summary of outfalls shall include the date of the monitoring requirements release. The Outfall Certification Summary shall be submitted in a format approved or provided by the Department. This submittal is only required when DMR submittal is required by Part I.B.4.

3. Noncompliance Notification

a. The Permittee must notify the Department if, for any reason, the Permittee's discharge:

(1) Potentially threatens human health or welfare;

(2) Potentially threatens fish or aquatic life;

(3) Causes an in-stream water quality criterion to be exceeded;

(4) Does not comply with an applicable toxic pollutant effluent standard or prohibition established under Section 307(a) of the FWPCA, 33 U.S.C. §1317(a);

(5) Contains a quantity of a hazardous substance which has been determined may be harmful to the public health or welfare under Section 311(b)(4) of the FWPCA, 33 U.S.C. §1321(b)(4); or

(6) Exceeds any discharge limitation for an effluent parameter as a result of an unanticipated bypass or upset.

The Permittee shall orally or electronically report any of the above occurrences, describing the circumstances and potential effects of such discharge to the Director within 24-hours after the Permittee becomes aware of the occurrence of such discharge. In addition to the oral or electronic report, the Permittee shall submit to the Director a written report as provided in Part I.D.3.c., no later than five (5) days after becoming aware of the occurrence of such discharge.

b. If for any reason, the Permittee's discharge does not comply with any limitation of this Permit, the Permittee shall submit a written report to the Director as provided in Part I.D.3.c. This report must be submitted with the next Discharge Monitoring Report required to be submitted by Part I.D.1. of this Permit after becoming aware of the occurrence of such noncompliance.

c. Form 401 or 421 must be submitted to the Director in accordance with Parts I.D.3.a. and b. The completed form must document the following information:

(1) A description of the discharge and cause of noncompliance;

(2) The period of noncompliance, including exact dates, times, and duration of the noncompliance. If not corrected by the due date of the written report, then the Permittee is to state the anticipated timeframe that is expected to transpire before the noncompliance is resolved; and

(3) A description of the steps taken and/or being taken to reduce or eliminate the noncomplying discharge and to prevent its recurrence.

4. Reduction, Suspension, or Termination of Monitoring and/or Reporting

a. The Director may, with respect to any point source identified on Page 1 of this Permit and described more fully in the Permittee's application, authorize the Permittee to reduce, suspend, or terminate the monitoring and/or reporting required by this Permit upon the submission of a written request for such reduction, suspension, or termination by the Permittee provided:

(1) All mining, processing, or disturbance in the drainage basin(s) associated with the discharge has ceased and site access is adequately restricted or controlled to preclude unpermitted and unauthorized mining, processing, transportation, or associated operations/activity;

(2) Permanent, perennial vegetation has been re-established on all areas mined or disturbed for at least one year since mining has ceased in the drainage basin(s) associated with the surface discharge, or all areas have been permanently graded such that all drainage is directed back into the mined pit to preclude all surface discharges;

(3) Unless waived in writing by the Department, the Permittee has been granted, in writing, a 100% Bond Release, if applicable, by the Alabama Department of Industrial Relations and, if applicable, by the Surface Mining Commission for all areas mined or disturbed in the drainage basin(s) associated with the discharge;

(4) Unless waived in writing by the Department, the Permittee has submitted inspection reports prepared and certified by a Professional Engineer (PE) registered in the State of Alabama or a qualified professional under the PE's direction which certify that the facility has been fully reclaimed or that water quality remediation has been achieved. The first inspection must be conducted approximately one year prior to and the second inspection must be conducted within thirty days of the Permittee's request for termination of monitoring and reporting requirements;

(5) All surface effects of the mining activity such as fuel or chemical tanks, preparation plants or equipment, old tools or equipment, junk or debris, etc., must be removed and disposed of according to applicable state and federal regulations;

(6) The Permittee's request for termination of monitoring and reporting requirements contained in this Permit has been supported by monitoring data covering a period of at least six consecutive months or such longer period as is necessary to assure that the data reflect discharges occurring during varying seasonal climatological conditions;

(7) The Permittee has stated in its request that the samples collected and reported in the monitoring data submitted in support of the Permittee's request for monitoring termination or suspension are representative of the discharge and were collected in accordance with all Permit terms and conditions respecting sampling times (e.g., rainfall events) and methods and were analyzed in accordance with all Permit terms and conditions respecting analytical methods and procedures;

(8) The Permittee has certified that during the entire period covered by the monitoring data submitted, no chemical treatment of the discharge was provided;

(9) The Permittee's request has included the certification required by Part I.D.1.d. of this Permit; and

(10) The Permittee has certified to the Director in writing as part of the request, its compliance with (1) through (9) above.

b. It remains the responsibility of the Permittee to comply with the monitoring and reporting requirements of this Permit until written authorization to reduce, suspend, or terminate such monitoring and/or reporting is received by the Permittee from the Director.

E. OTHER REPORTING AND NOTIFICATION REQUIREMENTS

1. Anticipated Noncompliance

The Permittee shall give the Director written advance notice of any planned changes or other circumstances regarding a facility which may result in noncompliance with permit requirements.

2. Termination of Discharge

The Permittee shall notify the Director, in writing, when all discharges from any point source(s) identified on Page 1 of this Permit and described more fully in the Permittee's application have permanently ceased.

3. Updating Information

a. The Permittee shall inform the Director of any change in the Permittee's mailing address or telephone number or in the Permittee's designation of a facility contact or officer(s) having the authority and responsibility to prevent and abate violations of the AWPCA, the AEMA, the Department's rules and regulations, and the terms and conditions of this Permit, in writing, no later than ten (10) days after such change. Upon request of the Director, the Permittee shall furnish the Director with an update of any information provided in the permit application.

b. If the Permittee becomes aware that it failed to submit any relevant facts in a permit application, or submitted incorrect information in a permit application or in any report to the Director, it shall promptly submit such facts or information with a written explanation for the mistake and/or omission.

4. Duty to Provide Information

a. The Permittee shall furnish to the Director, within a reasonable time, any information which the Director may request to determine whether cause exists for modifying, suspending, terminating, or revoking and reissuing this Permit, in whole or in part, or to determine compliance with this Permit. The Permittee shall also furnish to the Director upon request, copies of records required to be maintained by this Permit.

b. The Permittee shall furnish to the Director upon request, within a reasonable time, available information (name, phone number, address, and site location) which identifies offsite sources of material or natural resources (mineral, ore, or other material such as iron, coal, coke, dirt, chert, shale, clay, sand, gravel, bauxite, rock, stone, etc.) used in its operation or stored at the facility.

F. SCHEDULE OF COMPLIANCE

The Permittee shall achieve compliance with the discharge limitations specified in Part I.A. of this Permit in accordance with the following schedule:

Compliance must be achieved by the effective date of this Permit.

PART II OTHER REQUIREMENTS, RESPONSIBILITIES, AND DUTIES

A. OPERATIONAL AND MANAGEMENT REQUIREMENTS

1. Facilities Operation and Management

The Permittee shall at all times operate and maintain all facilities and systems of treatment and control (and related appurtenances) which are installed or used by the Permittee to achieve compliance with the conditions of this Permit. Proper operation and maintenance includes effective performance, adequate funding, adequate operator staffing and training, and adequate laboratory and process controls, including appropriate quality assurance procedures. This provision requires the operation of backup or auxiliary facilities only when necessary to achieve compliance with the conditions of this Permit.

2. Pollution Abatement and/or Prevention Plan

The Pollution Abatement and/or Prevention (PAP) Plan shall be prepared and certified by a registered Professional Engineer (PE), licensed to practice in the State of Alabama, and shall include at a minimum, the information indicated in ADEM Admin. Code r. 335-6-9-.03 and ADEM Admin. Code ch. 335-6-9 Appendices A and B. The PAP Plan shall become a part of this Permit and all requirements of the PAP Plan shall become requirements of this Permit pursuant to ADEM Admin. Code r. 335-6-9-.05(2).

3. Best Management Practices (BMPs)

a. Unless otherwise authorized in writing by the Director, the Permittee shall provide a means of subsurface withdrawal for any discharge from each point source identified on Page 1 of this Permit and described more fully in the Permittee's application. Notwithstanding the above provision, a means of subsurface withdrawal need not be provided for any discharge caused by a 24-hour precipitation event greater than a 10-year, 24-hour precipitation event.

b. Dilution water shall not be added to achieve compliance with discharge limitations except when the Director has granted prior written authorization for dilution to meet water quality requirements.

c. The Permittee shall minimize the contact of water with overburden, including but not limited to stabilizing disturbed areas through grading, diverting runoff, achieving quick growing stands of temporary vegetation, sealing acid-forming and toxic-forming materials, and maximizing placement of waste materials in back-fill areas.

d. The Permittee shall prepare, submit to the Department for approval, and implement a Best Management Practices (BMPs) Plan for containment of any or all process liquids or solids, in a manner such that these materials do not present a potential for discharge, if so required by the Director. When submitted and approved, the BMP Plan shall become a part of this Permit and all requirements of the BMP Plan shall become requirements of this Permit.

e. Spill Prevention, Control, and Management

The Permittee shall prepare, implement, and maintain a Spill Prevention, Control and Countermeasures (SPCC) Plan acceptable to the Department that is prepared and certified by a Professional Engineer (PE), registered in the State of Alabama, for all onsite petroleum product or other pollutant storage tanks or containers as required by applicable state (ADEM Admin. Code r. 335-6-6-.12(r)) and federal (40 C.F.R. §§112.1-.7)

regulations. The Permittee shall implement appropriate structural and/or non-structural spill prevention, control, and/or management sufficient to prevent any spills of pollutants from entering a ground or surface water of the State or a publicly or privately owned treatment works. Careful consideration should be applied for tanks or containers located near treatment ponds, water bodies, or high traffic areas. In most situations this would require construction of a containment system if the cumulative storage capacity of petroleum products or other pollutants at the facility is greater than 1320 gallons. Any containment system used to implement this requirement shall be constructed of materials compatible with the substance(s) contained and shall prevent the contamination of groundwater. Such containment systems shall be capable of retaining a volume equal to 110 percent of the capacity of the largest tank for which containment is provided. The applicant shall maintain onsite or have readily available flotation booms to contain, and sufficient material to absorb, fuel and chemical spills and leaks. Soil contaminated by chemical spills, oil spills, etc., must be immediately cleaned up or be removed and disposed of in an approved manner.

f. All surface drainage and storm water runoff which originate within or enters the Permittee's premises and which contains any pollutants or other wastes shall be discharged, if at all, from a point source identified on Page 1 of this Permit and described more fully in the Permittee's application.

g. The Permittee shall take all reasonable precautions to prevent any surface drainage or storm water runoff which originates outside the Permittee's premises and which contains any pollutants or other wastes from entering the Permittee's premises. At no time shall the Permittee discharge any such surface drainage or storm water runoff which enters the Permittee's premises if, either alone or in combination with the Permittee's effluent, the discharge would exceed any applicable discharge limitation specified in Part I.A. of this Permit.

4. Biocide Additives

a. The Permittee shall notify the Director in writing not later than sixty (60) days prior to instituting the use of any biocide corrosion inhibitor or chemical additive in any cooling or boiler system(s) regulated by this Permit. Notification is not required for additives that should not reasonably be expected to cause the cooling water or boiler water to exhibit toxicity as determined by analysis of manufacturer's data or testing by the Permittee. Such notification shall include:

(a) Name and general composition of biocide or chemical;

(b) 96-hour median tolerance limit data for organisms representative of the biota of the water(s) which the discharge(s) enter(s);

(c) Quantities to be used;

(d) Frequencies of use;

(e) Proposed discharge concentrations; and

(f) EPA registration number, if applicable.

b. The use of any biocide or chemical additive containing tributyl tin, tributyl tin oxide, zinc, chromium, or related compounds in any cooling or boiler system(s) regulated by the Permit is prohibited except as exempted below. The use of a biocide or additive containing zinc, chromium or related compounds may be used in special circumstances if (1) the permit contains limits for these substances, or (2) the applicant demonstrates

during the application process that the use of zinc, chromium or related compounds as a biocide or additive will not pose a reasonable potential to violate the applicable State water quality standards for these substances. The use of any additive, not identified in this Permit or in the application for this Permit or not exempted from notification under this Permit is prohibited, prior to a determination by the Department that permit modification to control discharge of the additive is not required or prior to issuance of a permit modification controlling discharge of the additive.

5. Facility Identification

The Permittee shall clearly display prior to commencement of any regulated activity and until permit coverage is properly terminated, the name of the Permittee, entire NPDES permit number, facility or site name, and other descriptive information deemed appropriate by the Permittee at an easily accessible location(s) to adequately identify the site, unless approved otherwise in writing by the Department. The Permittee shall repair or replace the sign(s) as necessary upon becoming aware that the identification is missing or is unreadable due to age, vandalism, theft, weather, or other reason.

6. Removed Substances

Solids, sludges, filter backwash, or any other pollutants or other wastes removed in the course of treatment or control of wastewaters shall be disposed of in a manner that complies with all applicable Department rules and regulations.

7. Loss or Failure of Treatment Facilities

Upon the loss or failure of any treatment facility, including but not limited to the loss or failure of the primary source of power of the treatment facility, the Permittee shall, where necessary to maintain compliance with the discharge limitations specified in Part I.A. of this Permit or any other terms or conditions of this Permit, cease, reduce, or otherwise control production and/or discharges until treatment is restored.

8. Duty to Mitigate

The Permittee shall promptly take all reasonable steps to minimize or prevent any violation of this Permit or to mitigate and minimize any adverse impact to waters resulting from noncompliance with any discharge limitation specified in Part I.A. of this Permit, including such accelerated or additional monitoring of the discharge and/or the receiving waterbody as is necessary to determine the nature and impact of the noncomplying discharge.

B. BYPASS AND UPSET

1. Bypass

a. Any bypass is prohibited except as provided in Parts II.B.1.b. and c.

b. A bypass is not prohibited if:

(1) It does not cause any applicable discharge limitation specified in Part I.A. of this Permit to be exceeded;

(2) The discharge resulting from such bypass enters the same receiving water as the discharge from the permitted outfall;

(3) It is necessary for essential maintenance of a treatment or control facility or system to assure efficient operation of such facility or system; and

(4) The Permittee monitors the discharge resulting from such bypass at a frequency, at least daily, sufficient to prove compliance with the discharge limitations specified in Part I.A. of this Permit.

c. A bypass is not prohibited and need not meet the discharge limitations specified in Part I.A. of this Permit if:

(1) It is unavoidable to prevent loss of life, personal injury, or severe property damage;

(2) There are no feasible alternatives to the bypass, such as the use of auxiliary treatment facilities, retention of untreated wastes, or maintenance during normal periods of equipment downtime. This condition is not satisfied if the Permittee could have installed adequate backup equipment to prevent a bypass which occurred during normal periods of equipment downtime or preventive maintenance; and

(3) The Permittee submits a written request for authorization to bypass to the Director at least ten (10) days, if possible, prior to the anticipated bypass or within 24 hours of an unanticipated bypass, the Permittee is granted such authorization, and Permittee complies with any conditions imposed by the Director to minimize any adverse impact to waters resulting from the bypass.

d. The Permittee has the burden of establishing that each of the conditions of Parts II.B.1.b. or c. have been met to qualify for an exception to the general prohibition against bypassing contained in Part II.B.1.a. and an exemption, where applicable, from the discharge limitations specified in Part I.A. of this Permit.

2. Upset

a. Except as provided in Parts II.B.2.b. and c., a discharge which results from an upset need not meet the applicable discharge limitations specified in Part I.A. of this Permit if:

(1) No later than 24-hours after becoming aware of the occurrence of the upset, the Permittee orally reports the occurrence and circumstances of the upset to the Director; and

(2) No later than five (5) days after becoming aware of the occurrence of the upset, the Permittee furnishes the Director with evidence, including properly signed, contemporaneous operating logs, design drawings, construction certification, maintenance records, weir flow measurements, dated photographs, rain gauge measurements, or other relevant evidence, demonstrating that:

(i) An upset occurred;

(ii) The Permittee can identify the specific cause(s) of the upset;

(iii) The Permittee's treatment facility was being properly operated at the time of the upset; and

(iv) The Permittee promptly took all reasonable steps to minimize any adverse impact to waters resulting from the upset.

b. Notwithstanding the provisions of Part II.B.2.a., a discharge which is an overflow from a treatment facility or system, or an excess discharge from a point source associated with a treatment facility or system and which results from a 24-hour precipitation event larger than a 10-year, 24-hour precipitation event is not exempted from the discharge limitations specified in Part I.A. of this Permit unless:

(1) The treatment facility or system is designed, constructed, and maintained to contain the maximum volume of wastewater which would be generated by the facility during a 24-hour period without an increase in volume from precipitation and the maximum volume of wastewater resulting from a 10-year, 24-hour precipitation event or to treat the maximum flow associated with these volumes.

In computing the maximum volume of wastewater which would result from a 10-year, 24-hour precipitation event, the volume which would result from all areas contributing runoff to the individual treatment facility must be included (i.e., all runoff that is not diverted from the mining area and runoff which is not diverted from the preparation plant area); and

(2) The Permittee takes all reasonable steps to maintain treatment of the wastewater and minimize the amount of overflow or excess discharge.

c. The Permittee has the burden of establishing that each of the conditions of Parts II.B.2.a. and b. have been met to qualify for an exemption from the discharge limitations specified in Part I.A. of this Permit.

C. PERMIT CONDITIONS AND RESTRICTIONS

1. Prohibition against Discharge from Facilities Not Certified

a. Notwithstanding any other provisions of this Permit, if the permitted facility has not obtained or is not required to obtain a permit from the Alabama Surface Mining Commission, any discharge(s) from any point or nonpoint source(s) from the permitted facility which was not certified to the Department on a form approved by the Department by a professional engineer, registered in the State of Alabama, as being designed, constructed, and in accordance with plans and specifications reviewed by the Department is prohibited; or

b. Notwithstanding any other provisions of this Permit, if the permitted facility has obtained or is required to obtain a permit from the Alabama Surface Mining Commission, any discharge(s) from any point or nonpoint source(s) from the permitted facility which is associated with a treatment facility which was not constructed and certified to the Alabama Surface Mining Commission pursuant to applicable provisions of said Commission's regulations, is prohibited until the Permittee submits to the Alabama Surface Mining Commission, certification by a professional engineer, registered in the State of Alabama, certifying that such facility has been constructed in accordance with plans and specifications approved by the Alabama Surface Mining Commission. This requirement shall not apply to pumped discharges from the underground works of underground coal mines where no surface structure is required by the Alabama Surface Mining Commission, provided the Department is notified in writing of the completion or installation of such facilities, and the pumped discharges will meet permit effluent limits without treatment.

2. Permit Modification, Suspension, Termination, and Revocation

a. This Permit may be modified, suspended, terminated, or revoked and reissued, in whole or in part, during its term for cause, including but not limited to, the following:

(1) The violation of any term or condition of this Permit;

(2) The obtaining of this Permit by misrepresentation or the failure to disclose fully all relevant facts;

(3) The submission of materially false or inaccurate statements or information in the permit application or reports required by the Permit;

(4) The need for a change in any condition that requires either a temporary or permanent reduction or elimination of the permitted discharge;

(5) The existence of any typographical or clerical errors or of any errors in the calculation of discharge limitations;

(6) The existence of material and substantial alterations or additions to the facility or activity generating wastewater which occurred after permit issuance which justify the application of permit conditions that are different or absent in the existing permit;

(7) The threat of the Permittee's discharge on human health or welfare; or

(8) Any other cause allowed by ADEM Admin. Code ch. 335-6-6.

b. The filing of a request by the Permittee for modification, suspension, termination, or revocation and reissuance of this Permit, in whole or in part, does not stay any Permit term or condition of this Permit.

3. Automatic Expiration of Permits for New or Increased Discharges

a. Except as provided by ADEM Admin. Code r. 335-6-6-.02(g) and 335-6-6-.05, if this Permit was issued for a new discharger or new source, it shall expire eighteen months after the issuance date if construction has not begun during that eighteen month period.

b. Except as provided by ADEM Admin. Code r. 335-6-6-.02(g) and 335-6-6-.05, if any portion of this Permit was issued or modified to authorize the discharge of increased quantities of pollutants to accommodate the modification of an existing facility, that portion of this Permit shall expire eighteen months after this Permit's issuance if construction of the modification has not begun within eighteen month period.

c. Construction has begun when the owner or operator has:

(1) Begun, or caused to begin as part of a continuous on-site construction program:

(i) Any placement, assembly, or installation of facilities or equipment; or

(ii) Significant site preparation work including clearing, excavation, or removal of existing buildings, structures, or facilities which is necessary for the placement, assembly, or installation of new source facilities or equipment; or

(2) Entered into a binding contractual obligation for the purpose of placement, assembly, or installation of facilities or equipment which are intended to be used in its operation within a reasonable time. Options to purchase or contracts which can be terminated or modified without substantial loss, and contracts for feasibility, engineering, and design studies do not constitute a contractual obligation under the paragraph. The entering into a lease with the State of Alabama for exploration and production of hydrocarbons shall also be considered beginning construction.

d. The automatic expiration of this Permit for new or increased discharges if construction has not begun within the eighteen month period after the issuance of this Permit may be tolled by administrative or judicial stay.

4. Transfer of Permit

This Permit may not be transferred or the name of the Permittee changed without notice to the Director and subsequent modification or revocation and reissuance of this Permit to identify the new Permittee and to incorporate any other changes as may be required under the FWPCA or AWPCA. In the case of a change in name, ownership, or control of the Permittee's premises only, a request for permit modification in a format acceptable to the Director is required at least 30 days prior to the change. In the case of a change in name, ownership, or control of the Permittee's premises accompanied by a change or proposed change in effluent characteristics, a complete permit application is required to be submitted to the Director at least 180 days prior to the change. Whenever the Director is notified of a change in name, ownership, or control, he may decide not to modify the existing Permit and require the submission of a new permit application.

5. Groundwater

Unless authorized on page 1 of this Permit, this Permit does not authorize any discharge to groundwater. Should a threat of groundwater contamination occur, the Director may require groundwater monitoring to properly assess the degree of the problem, and the Director may require that the Permittee undertake measures to abate any such discharge and/or contamination.

6. Property and Other Rights

This Permit does not convey any property rights in either real or personal property, or any exclusive privileges, nor does it authorize any injury to persons or property or invasion of other private rights, trespass, or any infringement of Federal, State, or local laws or regulations, nor does it authorize or approve the construction of any physical structures or facilities or the undertaking of any work in any waters of the State or of the United States.

D. RESPONSIBILITIES

1. Duty to Comply

a. The Permittee must comply with all terms and conditions of this Permit. Any permit noncompliance constitutes a violation of the AWPCA, AEMA, and the FWPCA and is grounds for enforcement action, for permit termination, revocation and reissuance, suspension, modification, or denial of a permit renewal application.

b. The Permittee shall comply with effluent standards or prohibitions established under Section 307(a) of the FWPCA for toxic pollutants within the time provided in the regulations that establish these standards or prohibitions, even if this Permit has not yet been modified to incorporate the effluent standard, prohibition or requirement.

c. For any violation(s) of this Permit, the Permittee is subject to a civil penalty as authorized by the AWPCA, the AEMA, the FWPCA, and Code of Alabama 1975, §§22-22A-1 et. seq., as amended, and/or a criminal penalty as authorized by Code of Alabama 1975, §22-22-1 et. seq., as amended.

d. The necessity to halt or reduce production or other activities in order to maintain compliance with the conditions of this Permit shall not be a defense for a Permittee in an enforcement action.

e. Nothing in this Permit shall be construed to preclude or negate the Permittee's responsibility or liability to apply for, obtain, or comply with other ADEM, federal, state, or local government permits, certifications, licenses, or other approvals.

f. The discharge of a pollutant from a source not specifically identified in the permit application for this Permit and not specifically included in the description of an outfall in this Permit is not authorized and shall constitute noncompliance with this Permit.

g. The Permittee shall take all reasonable steps, including cessation of production or other activities, to minimize or prevent any violation of this Permit or to minimize or prevent any adverse impact of any permit violation.

2. Change in Discharge

a. The Permittee shall apply for a permit modification at least 180 days in advance of any facility expansion, production increase, process change, or other action that could result in the discharge of additional pollutants, increase the quantity of a discharged pollutant, or that could result in an additional discharge point. This requirement also applies to pollutants that are not subject to discharge limitations in this Permit. No new or increased discharge may begin until the Director has authorized it by issuance of a permit modification or a reissued permit.

b. The Permittee shall notify the Director as soon as it knows or has reason to believe that it has begun or expects to begin to discharge any pollutant listed as a toxic pollutant pursuant to Section 307(a) of the FWPCA, 33 U.S.C. §1317(a), any substance designated as a hazardous substance pursuant to Section 311(b)(2) of the FWPCA, 33 U.S.C. §1321(b)(2), any waste listed as a hazardous waste pursuant to Code of Alabama 1975, §22-30-10, or any other pollutants or other wastes which is not subject to any discharge limitations specified in Part I.A. of this Permit and was not reported in the Permittee's application, was reported in the Permittee's application in concentrations or mass rates lower than that which the Permittee expects to begin to be discharged, or has reason to believe has begun to be discharged.

3. Compliance with Toxic or Other Pollutant Effluent Standard or Prohibition

If any applicable effluent standard or prohibition (including any schedule of compliance specified in such effluent standard or prohibition) is established under Sections 301(b)(2)(C),(D),(E) and (F) of the FWPCA, 33 U.S.C. §1311(b)(2)(C),(D),(E), and (F); 304(b)(2) of the FWPCA, 33 U.S.C. §1314(b)(2); or 307(a) of the FWPCA, 33 U.S.C. §1317(a), for a toxic or other pollutant discharged by the Permittee, and such standard or prohibition is more stringent than any discharge limitation on the pollutant specified in Part I.A. of this Permit or controls a pollutant not limited in Part I.A. of this Permit, this Permit shall be modified to conform to the toxic or other pollutant effluent standard or prohibition and the Permittee shall be notified of such modification. If this Permit has not been modified to conform to the toxic or other pollutant effluent standard or prohibition before the effective date of such standard or prohibition, the authorization to discharge in this Permit shall be void to the extent that any discharge limitation on such pollutant in Part I.A.

of this Permit exceeds or is inconsistent with the established toxic or other pollutant effluent standard or prohibition.

4. Compliance with Water Quality Standards and Other Provisions

a. On the basis of the Permittee's application, plans, or other available information, the Department has determined that compliance with the terms and conditions of this Permit will assure compliance with applicable water quality standards. However, this Permit does not relieve the Permittee from compliance with applicable State water quality standards established in ADEM Admin. Code ch. 335-6-10, and does not preclude the Department from taking action as appropriate to address the potential for contravention of applicable State water quality standards which could result from discharges of pollutants from the permitted facility.

b. Compliance with Permit terms and conditions notwithstanding, if the Permittee's discharge(s) from point source(s) identified on Page 1 of this Permit cause(s) or contribute(s) to a condition in contravention of State water quality standards, the Department may require abatement action to be taken by the Permittee, modify the Permit pursuant to the Department's rules and regulations, or both.

c. If the Department determines, on the basis of a notice provided pursuant to Part II.C.2. of this Permit or any investigation, inspection, or sampling, that a modification of this Permit is necessary to assure maintenance of water quality standards or compliance with other provisions of the AWPCA or FWPCA, the Department may require such modification and, in cases of emergency, the Director may prohibit the noticed act until the Permit has been modified.

5. Compliance with Statutes and Rules

a. This Permit has been issued under ADEM Admin. Code div. 335-6. All provisions of this division, that are applicable to this Permit, are hereby made a part of this Permit. A copy of this division may be obtained for a small charge from the Office of General Counsel, Alabama Department of Environmental Management, 1400 Coliseum Blvd., Montgomery, AL 36110-2059.

b. This Permit does not authorize the noncompliance with or violation of any Laws of the State of Alabama or the United States of America or any regulations or rules implementing such laws. FWPCA, 33 U.S.C. Section 1319, and Code of Alabama 1975, Section 22-22-14.

6. Right of Entry and Inspection

The Permittee shall allow the Director, or an authorized representative, upon the presentation of credentials and other documents as may be required by law to:

a. Enter upon the Permittee's premises where a regulated facility or activity is located or conducted, or where records must be kept under the conditions of the Permit;

b. Have access to and copy, at reasonable times, any records that must be kept under the conditions of this Permit;

c. Inspect at reasonable times any facilities, equipment (including monitoring and control equipment), practices, or operations regulated or required under this Permit; and

d. Sample or monitor at reasonable times, for the purposes of assuring Permit compliance or as otherwise authorized by the AWPCA, any substances or parameters at any location.

7. **Duty to Reapply or Notify of Intent to Cease Discharge**

a. If the Permittee intends to continue to discharge beyond the expiration date of this Permit, the Permittee shall file with the Department a complete permit application for reissuance of this Permit at least 180 days prior to its expiration.

b. If the Permittee does not desire to continue the discharge(s) allowed by this Permit, the Permittee shall notify the Department at least 180 days prior to expiration of this Permit of the Permittee's intention not to request reissuance of this Permit. This notification must include the information required in Part I.D.4.a. and be signed by an individual meeting the signatory requirements for a permit application as set forth in ADEM Admin. Code r. 335-6-6-.09.

c. Failure of the Permittee to submit to the Department a complete application for reissuance of this Permit at least 180 days prior to the expiration date of this Permit will void the automatic continuation of this Permit provided by ADEM Admin. Code r. 335-6-6-.06; and should this Permit not be reissued for any reason, any discharge after the expiration of this Permit will be an unpermitted discharge.

PART III ADDITIONAL REQUIREMENTS, CONDITIONS, AND LIMITATIONS

A. CIVIL AND CRIMINAL LIABILITY

1. Tampering

Any person who falsifies, tampers with, or knowingly renders inaccurate any monitoring device or method required to be maintained or performed under this Permit shall, upon conviction, be subject to penalties and/or imprisonment as provided by the AWPCA and/or the AEMA.

2. False Statements

Any person who knowingly makes any false statement, representation, or certification in any record or other document submitted or required to be maintained under this Permit, including monitoring reports or reports of compliance or noncompliance shall, upon conviction, be punished as provided by applicable State and Federal law.

3. Permit Enforcement

This NPDES Permit is a Permit for the purpose of the AWPCA, the AEMA, and the FWPCA, and as such all terms, conditions, or limitations of this Permit are enforceable under State and Federal law.

4. Relief From Liability

Except as provided in Part II.B.1. (Bypass) and Part II.B.2. (Upset), nothing in this Permit shall be construed to relieve the Permittee of civil or criminal liability under the AWPCA, AEMA, or FWPCA for noncompliance with any term or condition of this Permit.

B. OIL AND HAZARDOUS SUBSTANCE LIABILITY

Nothing in this Permit shall be construed to preclude the institution of any legal action or relieve the Permittee from any responsibilities, liabilities, or penalties to which the Permittee is or may be subject to under Section 311 of the FWPCA, 33 U.S.C. §1321.

C. AVAILABILITY OF REPORTS

Except for data determined to be confidential under Code of Alabama 1975, §22-22-9(c), all reports prepared in accordance with the terms of this Permit shall be available for public inspection at the offices of the Department. Effluent data shall not be considered confidential. Knowingly making any false statement in any such report may result in the imposition of criminal penalties as provided for in Section 309 of the FWPCA, 33 U.S.C. §1319, and Code of Alabama 1975, §22-22-14.

D. DEFINITIONS

1. Alabama Environmental Management Act (AEMA) - means Code of Alabama 1975, §§22-22A-1 et. seq., as amended.

2. Alabama Water Pollution Control Act (AWPCA) - means Code of Alabama 1975, §§22-22-1 et. seq., as amended.

3. Average monthly discharge limitation - means the highest allowable average of "daily discharges" over a calendar month, calculated as the sum of all "daily discharges" measured during a calendar

month divided by the number of "daily discharges" measured during that month (zero discharge days shall not be included in the number of "daily discharges" measured and a less than detectable test result shall be treated as a concentration of zero if the most sensitive EPA approved method was used).

4. Arithmetic Mean - means the summation of the individual values of any set of values divided by the number of individual values.

5. BOD - means the five-day measure of the pollutant parameter biochemical oxygen demand

6. Bypass - means the intentional diversion of waste streams from any portion of a treatment facility.

7. CBOD - means the five-day measure of the pollutant parameter carbonaceous biochemical oxygen demand.

8. Controlled Surface Mine Drainage – means any surface mine drainage that is pumped or siphoned from the active mining area.

9. Crushed stone mine - means an area on or beneath land which is mined, quarried, or otherwise disturbed in activity related to the extraction, removal, or recovery of stone from natural or artificial deposits, including active mining, reclamation, and mineral storage areas, for production of crushed stone.

10. Daily discharge - means the discharge of a pollutant measured during any consecutive 24-hour period in accordance with the sample type and analytical methodology specified by the discharge permit.

11. Daily maximum - means the highest value of any individual sample result obtained during a day.

12. Daily minimum - means the lowest value of any individual sample result obtained during a day.

13. Day - means any consecutive 24-hour period.

14. Department - means the Alabama Department of Environmental Management.

15. Director - means the Director of the Department or his authorized representative or designee.

16. Discharge - means "[t]he addition, introduction, leaking, spilling or emitting of any sewage, industrial waste, pollutant or other waste into waters of the state." Code of Alabama 1975, §22-22-1(b)(8).

17. Discharge monitoring report (DMR) - means the form approved by the Director to accomplish monitoring report requirements of an NPDES Permit.

18. DO - means dissolved oxygen.

19. E. coli – means the pollutant parameter Escherichia coli.

20. 8HC - means 8-hour composite sample, including any of the following:

    a. The mixing of at least 5 equal volume samples collected at constant time intervals of not more than 2 hours over a period of not less than 8 hours between the hours of 6:00 a.m. and 6:00 p.m. If the sampling period exceeds 8 hours, sampling may be conducted beyond the 6:00 a.m. to 6:00 p.m. period.

b. A sample continuously collected at a constant rate over period of not less than 8 hours between the hours of 6:00 a.m. and 6:00 p.m. If the sampling period exceeds 8 hours, sampling may be conducted beyond the 6:00 a.m. to 6:00 p.m. period.

21. EPA - means the United States Environmental Protection Agency.

22. Federal Water Pollution Control Act (FWPCA) - means 33 U.S.C. §§1251 et. seq., as amended.

23. Flow – means the total volume of discharge in a 24-hour period.

24. Geometric Mean - means the Nth root of the product of the individual values of any set of values where N is equal to the number of individual values. The geometric mean is equivalent to the antilog of the arithmetic mean of the logarithms of the individual values. For purposes of calculating the geometric mean, values of zero (0) shall be considered one (1).

25. Grab Sample - means a single influent or effluent portion which is not a composite sample. The sample(s) shall be collected at the period(s) most representative of the discharge.

26. Indirect Discharger - means a nondomestic discharger who discharges pollutants to a publicly owned treatment works or a privately owned treatment facility operated by another person.

27. Industrial User - means those industries identified in the Standard Industrial Classification manual, Bureau of the Budget 1967, as amended and supplemented, under the category "Division D – Manufacturing" and such other classes of significant waste producers as, by regulation, the Director deems appropriate.

28. mg/L - means milligrams per liter of discharge.

29. MGD - means million gallons per day.

30. Monthly Average - means, other than for E. coli bacteria, the arithmetic mean of all the composite or grab samples taken for the daily discharges collected in one month period. The monthly average for E. coli bacteria is the geometric mean of daily discharge samples collected in a one month period. The monthly average for flow is the arithmetic mean of all flow measurements taken in a one month period. (Zero discharges shall not be included in the calculation of monthly averages.)

31. New Discharger - means a person owning or operating any building, structure, facility or installation:

    a. From which there is or may be a discharge of pollutants;

    b. From which the discharge of pollutants did not commence prior to August 13, 1979, and which is not a new source; and

    c. Which has never received a final effective NPDES Permit for dischargers at that site.

32. New Source - means:

    a. A new source as defined for coal mines by 40 CFR Part 434.11 (1994); and

    b. Any building, structure, facility, or installation from which there is or may be a discharge of pollutants, the construction of which commenced:

        (1) After promulgation of standards of performance under Section 306 of FWPCA which are applicable to such source; or

(2) After proposal of standards of performance in accordance with Section 306 of the FWPCA which are applicable to such source, but only if the standards are promulgated in accordance with Section 206 within 120 days of their proposal.

33. NH3-N - means the pollutant parameter ammonia, measured as nitrogen.

34. 1-year, 24-hour precipitation event - means the maximum 24-hour precipitation event with a probable recurrence interval of once in one year as defined by the National Weather Service and Technical Paper No. 40, "Rainfall Frequency Atlas of the U.S.," May 1961, or equivalent regional or rainfall probability information developed therefrom.

35. Permit application - means forms and additional information that are required by ADEM Admin. Code r. 335-6-6-.08 and applicable permit fees.

36. Point Source - means "any discernible, confined and discrete conveyance, including but not limited to any pipe, channel, ditch, tunnel, conduit, well, discrete fissure, container, rolling stock, concentrated animal feeding operation, or vessel or other floating craft from which pollutants are or may be discharged." Section 502(14) of the FWPCA, 33 U.S.C. §1362(14).

37. Pollutant - includes for purposes of this Permit, but is not limited to, those pollutants specified in Code of Alabama 1975, §22-22-1(b)(3) and those effluent characteristics, excluding flow, specified in Part I.A. of this Permit.

38. Pollutant of Concern - means those pollutants for which a water body is listed as impaired or which contribute to the listed impairment.

39. Pollution Abatement and/or Prevention Plan (PAP Plan) – mining operations plan developed to minimize impacts on water quality to avoid a contravention of the applicable water quality standards as defined in ADEM Admin. Code r. 335-6-9-.03

40. Preparation, Dry - means a dry preparation facility within which the mineral/material is cleaned, separated, or otherwise processed without use of water or chemical additives before it is shipped to the customer or otherwise utilized. A dry preparation plant includes all ancillary operations and structures necessary to clean, separate, or otherwise process the mineral/material, such as storage areas and loading facilities. Dry preparation also includes minor water spray(s) used solely for dust suppression on equipment and roads to minimize dust emissions.

41. Preparation, Wet - means a wet preparation facility within which the mineral/material is cleaned, separated, or otherwise processed using water or chemical additives before it is shipped to the customer or otherwise utilized. A wet preparation plant includes all ancillary operations and structures necessary to clean, separate, or otherwise process the mineral/material, such as storage areas and loading facilities. Wet preparation also includes mineral extraction/processing by dredging, slurry pumping, etc.

42. Privately Owned Treatment Works - means any devices or system which is used to treat wastes from any facility whose operator is not the operator of the treatment works, and which is not a "POTW".

43. Publicly Owned Treatment Works (POTW) - means a wastewater collection and treatment facility owned by the State, municipality, regional entity composed of two or more municipalities, or another entity created by the State or local authority for the purpose of collecting and treating municipal wastewater.

44. Receiving Stream - means the "waters" receiving a "discharge" from a "point source".

45. Severe property damage - means substantial physical damage to property, damage to the treatment facilities which causes them to become inoperable, or substantial and permanent loss of natural resources which can reasonably be expected to occur in the absence of a bypass. Severe property damage does not mean economic loss caused by delays in production.

46. 10-year, 24-hour precipitation event - means that amount of precipitation which occurs during the maximum 24-hour precipitation event with a probable recurrence interval of once in ten years as defined by the National Weather Service and Technical Paper No. 40, "Rainfall Frequency Atlas of the U.S.," May 1961, or equivalent regional or rainfall probability information developed therefrom.

47. TKN - means the pollutant parameter Total Kjeldahl Nitrogen.

48. TON - means the pollutant parameter Total Organic Nitrogen.

49. TRC - means Total Residual Chlorine.

50. TSS – means the pollutant parameter Total Suspended Solids

51. Treatment facility and treatment system - means all structures which contain, convey, and as necessary, chemically or physically treat mine and/or associated preparation plant drainage, which remove pollutants limited by this Permit from such drainage or wastewater. This includes all pipes, channels, ponds, tanks, and all other equipment serving such structures.

52. 24HC - means 24-hour composite sample, including any of the following:

    a. The mixing of at least 12 equal volume samples collected at constant time intervals of not more than 2 hours over a period of 24 hours;

    b. A sample collected over a consecutive 24-hour period using an automatic sampler composite to one sample. As a minimum, samples shall be collected hourly and each shall be no more than one twenty-fourth (1/24) of the total sample volume collected; or

    c. A sample collected over a consecutive 24-hour period using an automatic composite sampler composited proportional to flow.

53. 24-hour precipitation event - means that amount of precipitation which occurs within any 24-hour period.

54. 2-year, 24-hour precipitation event - means the maximum 24-hour precipitation event with a probable recurrence interval of once in two years as defined by the National Weather Service and Technical Paper No. 40, "Rainfall Frequency Atlas of the U.S.," May 1961, or equivalent regional or rainfall probability information developed therefrom.

55. Upset - means an exceptional incident in which there is an unintentional and temporary noncompliance with technology-based permit discharge limitations because of factors beyond the control of the Permittee. An upset does not include noncompliance to the extent caused by operational error, improperly designed treatment facilities, inadequate facilities, lack of preventive maintenance, or careless or improper operation.

56. Waters - means "[a]ll waters of any river, stream, watercourse, pond, lake, coastal, ground or surface water, wholly or partially within the State, natural or artificial. This does not include waters which are entirely confined and retained completely upon the property of a single individual, partnership, or corporation unless such waters are used in interstate commerce." Code of Alabama 1975, §22-22-1(b)(2). "Waters" include all "navigable waters" as defined in §502(7) of the FWPCA, 33 U.S.C. §1362(7), which are within the State of Alabama.

57. Week - means the period beginning at twelve midnight Saturday and ending at twelve midnight the following Saturday.

58. Weekly (7-day and calendar week) Average – is the arithmetic mean of all samples collected during a consecutive 7-day period or calendar week, whichever is applicable. The calendar week is defined as beginning on Sunday and ending on Saturday. Weekly averages shall be calculated for all calendar weeks with Saturdays in the month. If a calendar week overlaps two months (i.e., the Sunday is in one month and the Saturday in the following month), the weekly average calculated for the calendar week shall be included in the data for the month that contains the Saturday.

E. SEVERABILITY

The provisions of this Permit are severable, and if any provision of this Permit or the application of any provision of this Permit to any circumstance, is held invalid, the application of such provision to other circumstances, and the remainder of this Permit, shall not be affected thereby.

F. PROHIBITIONS AND ACTIVIES NOT AUTHORIZED

1. Discharges from disposal or landfill activities as described in ADEM Admin. Code div. 335-13 are not authorized by this Permit unless specifically approved by the Department.

2. Relocation, diversion, or other alteration of a water of the State is not authorized by this Permit unless specifically approved by the Department.

3. Lime or cement manufacturing or production and discharge of process waters from such manufacturing or production is not authorized by this Permit unless specifically approved by the Department.

4. Concrete or asphalt manufacturing or production and discharge of process waters from such manufacturing or production is not authorized by this Permit unless specifically approved by the Department.

5. The discharge of wastewater, generated by any process, facility, or by any other means not under the operational control of the Permittee or not identified in the application for this Permit or not identified specifically in the description of an outfall in this Permit is not authorized by this Permit.

G. DISCHARGES TO IMPAIRED WATERS

1. This Permit does not authorize new sources or new discharges of pollutants of concern to impaired waters unless consistent with an EPA-approved or EPA-established Total Maximum Daily Load (TMDL) and applicable State law. Impaired waters are those that do not meet applicable water quality standards and are identified on the State of Alabama's §303(d) list or on an EPA-approved or EPA-established TMDL. Pollutants of concern are those pollutants for which the receiving water is listed as impaired or contribute to the listed impairment.

2. Facilities that discharge into a receiving stream which is listed on the State of Alabama's §303(d) list of impaired waters, and with discharges that contain the pollutant(s) for which the waters are impaired, must within six (6) months of the Final §303(d) list approval, document in its BMP plan how the BMPs will control the discharge of the pollutant(s) of concern, and must ensure that there will be no increase of the pollutants of concern. A monitoring plan to assess the effectiveness of the BMPs in achieving the allocations must also be included in the BMP plan.

3. If the facility discharges to impaired waters as described above, it must determine whether a TMDL has been developed and approved or established by EPA for the listed waters. If a TMDL is approved or established during this Permit cycle by EPA for any waters into which the facility discharges, the facility must review the applicable TMDL to see if it includes requirements for control of any water discharged by the Permittee. Within six (6) months of the date of TMDL approval or establishment, the facility must notify the Department on how it will modify its BMP plan to include best management practices specifically targeted to achieve the allocations prescribed by the TMDL, if necessary. Any revised BMP plans must be submitted to the Department for review. The facility must include in the BMP plan a monitoring component to assess the effectiveness of the BMPs in achieving the allocations.

ALABAMA DEPARTMENT OF ENVIRONMENTAL MANGEMENT (ADEM)
OUTFALL CERTIFICATION SUMMARY

PERMITTEE NAME: Vulcan Construction Materials, LP
FACILITY NAME: Gurley Quarry
NPDES PERMIT NO: AL0075507
COUNTY: Madison County

Outfall Number	Is Outfall Certified?	Date of Certification	Outfall Latitude and Longitude	Date of ADEM Monitoring Release
001-1	☐ YES ☐ NO			
002-1	☐ YES ☐ NO			
003-1	☐ YES ☐ NO			
004-1	☐ YES ☐ NO			
005-1	☐ YES ☐ NO			
006-1	☐ YES ☐ NO			

I certify under penalty of law that this document and all attachments were prepared under my direction or supervision in accordance with a system designed to assure that qualified personnel properly gather and evaluate the information submitted. Based on my inquiry of the person or persons who manage the system, or those persons directly responsible for gathering the information, the information submitted is, to the best of my knowledge and belief, true, accurate, and complete. I am aware that there are significant penalties for submitting false information, including the possibility of fine and imprisonment for knowing violations.

Name and Title (Print) _____ Signature _____ Date _____

☐ Responsible Official ☐ Duly Authorized Representative

ALABAMA DEPARTMENT OF ENVIRONMENTAL MANAGEMENT
WATER DIVISION

NPDES INDIVIDUAL PERMIT RATIONALE

Company Name:	Vulcan Construction Materials, LP
Facility Name:	Gurley Quarry
County:	Madison County
Permit Number:	AL0075507
Prepared by:	Whitney Bell
Date:	October 2, 2013
Receiving Waters:	Unnamed Tributary to Sand Branch, Unnamed Tributary to Hurricane Creek, and Hurricane Creek
Permit Coverage:	Limestone Quarry, Wet Preparation Plant, Transportation and Storage, and Associated Areas
SIC Code:	1422

The Department has made a tentative determination that the available information is adequate to support reissuance of this permit.

This proposed permit covers a limestone quarry, wet preparation plant, transportation and storage, and associated areas which discharge to surface waters.

The Permittee has also indicated in a previous modification that there is a potential for a future asphalt or concrete plant to be located at or adjacent to this site. Because asphalt and concrete plant discharges are not covered by this proposed reissuance, the operator of any future asphalt or concrete plant must apply for and obtain an industrial NPDES permit to address any potential discharges from the plant prior to operation.

This proposed permit authorizes treated discharges into stream segments, other State waters, or local watersheds that currently have a water quality classification of Fish and Wildlife (F&W) (ADEM Admin. Code r. 335-6-10-.09). If the requirements of the proposed permit are fully implemented, the facility will not discharge pollutants at levels that will cause or contribute to a violation of the F&W classification. Outfalls 002-1 and 003-1 discharge into Hurricane Creek, a stream with the F&W classification, at a point that is greater than a 24-hour travel time to Flint River, which has the higher use classification of Public Water Supply.

Full compliance with the proposed permit terms and conditions is expected to be protective of instream water quality and ensure consistency with applicable instream State water quality standards for the receiving stream.

The instream water quality standards for pH in streams classified as Fish and Wildlife is 6.0 – 8.5 s.u. per ADEM Admin Code 335-6-10-.09. However, due to the fact that discharges from Outfalls 001-1 and 003-1 through 006-1 are expected in response to rain events, it is the opinion of the Department that discharges with an allowable pH daily maximum of 9.0 s.u. will not adversely affect the instream pH based on the low discharge/stream flow ratio. The proposed limitations have been shown to be protective of water quality.

However, the Permittee has indicated that discharges from Outfall 002-1 may be pumped and may occur during low flow conditions in the receiving stream. Because the discharge/stream flow ratio would be high if pumped discharges occur during the low flow conditions in the receiving stream, Outfall 002-1 has been giving a maximum

pH limitation of 8.5 s.u. in accordance with the instream water quality standards for pH in streams classified as Fish and Wildlife per ADEM Admin. Code r. 335-6-10-.09.

Effluent limitations for Total Suspended Solids (TSS) are established by Best Professional Judgment (BPJ) and are based on proper implementation of Best Management Practices at the facility. These parameters are indicative of the pollutants typically discharged by a facility covered by this permit and has been shown not to adversely affect water quality.

The applicant has requested, in accordance with 40 CFR Part 122.21 and their NPDES permit application, a waiver from testing for the Part A, B, and C pollutants listed in the EPA Form 2C and 2D that are not addressed in their application. They have also certified that due to the processes involved in their mining activity these pollutants are believed to be not present in the waste stream.

The Pollution Abatement/Prevention (PAP) plan for this facility has been prepared by a professional engineer (PE) registered in the State of Alabama and is designed to ensure reduction of pollutants in the waste stream to a level that, if operated properly, the discharge will not contribute to or cause a violation of applicable State water quality standards. The proposed permit terms and conditions are predicated on the basis of ensuring a reduction of pollutants in the discharge to a level that reduces the potential of contributing to or causing a violation of applicable State water quality standards.

In accordance with ADEM Admin. Code R. 335-6-3-.07 the design professional engineer, as evidenced by their seal and/or signature on the application, has accepted full responsibility for the effectiveness of the waste treatment facility to treat the Permittee's effluent to meet NPDES permit limitations and requirements, and to fully comply with Alabama's water quality standards, when such treatment facilities are properly operated.

If there is a reasonable potential that a pollutant present in the treated discharges from a facility could cause or contribute to a contravention of applicable State water quality standards above numeric or narrative criteria, 40 CFR Part 122 requires the Department to establish effluent limits using calculated water quality criteria, establish effluent limits on a case-by-case basis using criteria established by EPA, or establish effluent limits based on an indicator parameter. Based on available information, potential pollutants discharged from this facility, if discharged within the concentrations allowed by this permit, would not have a reasonable potential to cause or contribute to a contravention of applicable State water quality standards.

Pursuant to ADEM Admin. Code R. 335-6-6-.12(r) this permit requires the Permittee to design and implement a Spill Prevention Control and Countermeasures (SPCC) plan for all stored chemicals, fuels and/or stored pollutants that have the potential to discharge to a water of the State. This plan must meet the minimum engineering requirements as defined in 40 CFR Part 112 and must provide for secondary containment adequate to control a potential spill.

The applicant is proposing discharges into Hurricane Creek (AL06030002-0403-101), a stream segment or other water of the State with an approved Total Maximum Daily Load (TMDL) for pathogens (fecal coliform). However, fecal coliform, the pollutant of concern, is not a pollutant expected at significant levels from this facility. Therefore, additional restrictions are not imposed by this draft permit modification.

The applicant is not proposing discharges into a stream segment or other State water that is included on Alabama's current CWA §303(d) list.

The applicant is not proposing any new discharges of pollutant(s), in addition to those previously permitted, to an ADEM identified Tier I water.

The proposed permit does not authorize new or increased discharges of pollutants to a Tier II water. Therefore, the Antidegradation Policy (ADEM Admin. Code 335-6-10-.04) does not apply to this permit.

ALABAMA DEPARTMENT OF ENVIRONMENTAL MANAGEMENT (ADEM)
NPDES INDIVIDUAL PERMIT APPLICATION

SURFACE & UNDERGROUND MINERAL & ORE OR MINERAL PRODUCT MINING, QUARRYING, EXCAVATION, BORROWING, HYDRAULIC MINING, STORAGE, PROCESSING, PREPARATION, RECOVERY, HANDLING, LOADING, STORING, OR DISPOSING ACTIVITIES AND ASSOCIATED AREAS INCLUDING PRE-MINING SITE DEVELOPMENT, CONSTRUCTION, EXCAVATION, CLEARING, DISTURBANCE, RECLAMATION, AND ASSOCIATED AREAS

R#13-29344 W. Bell $5715.00

INSTRUCTIONS: PLEASE READ THE ACCOMPANYING INSTRUCTIONS CAREFULLY BEFORE COMPLETING THIS FORM. COMPLETE ALL QUESTIONS. RESPOND WITH "N/A" AS APPROPRIATE. INCOMPLETE OR INCORRECT ANSWERS OR MISSING SIGNATURES WILL DELAY PROCESSING. ATTACH ADDITIONAL COMMENTS OR INFORMATION AS NEEDED. IF SPACE IS INSUFFICIENT, CONTINUE ON AN ATTACHED SHEET(S) AS NECESSARY. COMMENCEMENT OF ACTIVITIES APPLIED FOR AS DETAILED IN THIS APPLICATION ARE NOT AUTHORIZED UNTIL PERMIT COVERAGE HAS BEEN ISSUED BY THE DEPARTMENT.

PLEASE TYPE OR PRINT IN INK ONLY.

PURPOSE OF THIS APPLICATION

- ☐ Initial Permit Application for New Facility
- ☐ Initial Permit Application for Existing Facility (e.g. facility previously permitted less than 5 acres)
- ☐ Modification of Existing Permit
- ☒ Reissuance of Existing Permit
- ☐ Reissuance & Modification Existing Permit
- ☐ Reissuance & Transfer of Existing Permit
- ☐ Revocation and Reissuance of Existing Permit
- ☐ Other _____

I. GENERAL INFORMATION

NPDES Permit Number (Not applicable if initial permit application): *AL* 0075507	County(s) in which Facility is Located: Madison

RECEIVED AUG 29 2013 STORM WATER MANAGEMENT BRANCH

Company/Permittee Name: Vulcan Construction Materials, LP	Facility Name (*e.g.*, Mine Name, Pit Name, *etc.*): Gurley Quarry
Mailing Address of Company/Permittee: 1200 Urban Center Drive	Physical Address of Facility (as near as possible to entrance): 5625 Highway 72 East
City: Birmingham State: AL Zip: 35242	City: Gurley State: AL Zip: 35748

Permittee Phone Number: 205-298-3000	Permittee Fax Number: 205-298-2675	Latitude and Longitude of entrance: N 34°, 42', 55" W 86°, 24', 13"

Responsible Official (as described on page 13 of this application): Sherrod B. Clarke, Jr.	Responsible Official Title: Vice President & General Manager
Mailing Address of Responsible Official: 1200 Urban Center Drive	Physical Address of Responsible Official: 1200 Urban Center Drive
City: Birmingham State: AL Zip: 35242	City: Birmingham State: AL Zip: 35242

Phone Number of Responsible Official: 205-298-3000	Fax Number of Responsible Official: 205-298-2675	Email Address of Responsible Official: clarkem@vmcmail.com

Facility Contact: Joey West	Facility Contact Title: Plant Manager	
Physical Address of Facility Contact: 4210 Northeast Stringfield Road	Phone Number of Facility Contact: 256-852-0411	Fax Number of Facility Contact: 256-859-3094
City: Huntsville State: AL Zip: 35810	Email Address of Facility Contact: westjoey@vmcmail.com	

II. MEMBER INFORMATION

A. Identify the name, title/position, and unless waived in writing by the Department, the residence address of every officer, general partner, LLP partner, LLC member, investor, director, or person performing a function similar to a director, of the applicant, and each person who is the record or beneficial owner of 10 percent or more of any class of voting stock of the applicant, or any other responsible official(s) of the applicant with legal or decision making responsibility or authority for the facility:

Name:	Title/Position:	Physical Address of Residence (P.O. Box is Not Acceptable)
See Addendum #1		

B. Other than the "Company/Permittee" listed in Part I., identify the name of each corporation, partnership, association, and single proprietorship for which any individual identified in Part II.A. is or was an officer, general partner, LLP partner, LLC member, investor, director, or individual performing a function similar to a director, or principal (10% or more) stockholder, that had an Alabama NPDES permit at any time during the five year (60 month) period immediately preceding the date on which this form is signed:

Name of Corporation, Partnership, Association, or Single Proprietorship:	Name of Individual from Part II.A.:	Title/Position in Corporation, Partnership, Association, or Single Proprietorship:
See Addendum #1		

III. LEGAL STRUCTURE OF APPLICANT

A. Indicate the legal structure of the "Company/Permittee" listed in Part I:

☐ Corporation ☐ Association ☐ Individual ☐ Single Proprietorship ☐ Partnership ☐ LLP ☐ LLC

☐ Government Agency: _____ ☒ Other: Limited Partnership

If not an individual or single proprietorship, is the "Company/Permittee" listed in Part I. properly registered and in good standing with the Alabama Secretary of State's Office? (If the answer is "No," attach a letter of explanation.) ☒ Yes ☐ No

Parent Corporation and Subsidiary Corporations of Applicant, if any: Vulcan Construction Materials, LP is a partnership comprised of Legacy Vulcan Corporation & Vulcan Aggregates Company, LLC.

D. Land Owner(s): Vulcan Lands, Inc. and Springer Place, LP

E. Mining Sub-contractor(s)/Operator(s), if known: Operator: Vulcan Construction Materials, LP (operator)

IV. COMPLIANCE HISTORY

A. Has the applicant ever had any of the following:

	Yes	No
(1) An Alabama NPDES, SID, or UIC permit suspended or terminated?	☐	☒
(2) An Alabama license to mine suspended or revoked?	☐	☒
(3) An Alabama or federal mining permit suspended or terminated?	☐	☒
(4) A reclamation bond, or similar security deposited in lieu of a bond, or portion thereof, forfeited?	☐	☒
(5) A bond or similar security deposited in lieu of a bond, or portion thereof, the purpose of which was to secure compliance with any requirement of the Alabama Water Improvement Commission or Alabama Department of Environmental Management, forfeited?	☐	☒

(If the response to any item of Part IV.A. is "Yes," attach a letter of explanation.)

B. Identify every Warning Letter, Notice of Violation (NOV), Administrative Action, or litigation issued to the applicant, parent corporation, subsidiary, general partner, LLP partner, or LLC member and filed by ADEM or EPA during the three year (36 months) period preceding the date on which this form is signed. Indicate the date of issuance, briefly describe alleged violations, list actions (if any) to abate alleged violations, and indicate date of final resolution:

See Addendum #2 - None

V. OTHER PERMITS/AUTHORIZATIONS

A. List any other NPDES or other environmental permits (including permit numbers), authorizations, or certifications that have been applied for or issued within the State by ADEM, EPA, Alabama Surface Mining Commission (ASMC), Alabama Department of Industrial Relations (ADIR), or other agency, to the applicant, parent corporation, subsidiary, or LLC member for this facility whether presently effective, expired, suspended, revoked, or terminated:

ADEM Air Permit: 709-0022, ADEM Water Permit AL0075507

B. List any other NPDES or other ADEM permits (including permit numbers), authorizations, or certifications that have been applied for or issued within the State by ADEM, EPA, ASMC, or ADIR, to the applicant, parent corporation, subsidiary, or LLC member for other facilities whether presently effective, expired, suspended, revoked, or terminated:

See Addendum #3

VI. PROPOSED SCHEDULE

Anticipated Activity Commencement Date: 2004 Anticipated Activity Completion Date: 2055

VII. ACTIVITY DESCRIPTION & INFORMATION

A. Proposed Total Area of the Permitted Site: 493.3 acres Proposed Total Disturbed Area of the Permitted Site: 129.9 acres

B. Township(s), Range(s), Section(s): Township 4S, Range 2E, Sections 2, 3, 10, 11

C. Detailed Directions to Site: Take I-565 east from Huntsville, continue east on US-72 E approximately 10 miles to the quarry on the left.

D. Is/ will this facility:

		Yes	No
(1)	an existing facility which currently results in discharges to State waters?	☒	☐
(2)	a proposed facility which will result in a discharge to State waters?	☐	☒
(3)	be located within any 100-year flood plain?	☒	☐
(4)	discharge to Municipal Separate Storm Sewer?	☐	☒
(5)	discharge to waters of or be located in the Coastal Zone?	☐	☒
(6)	need/have ADEM UIC permit coverage?	☐	☒
(7)	be located on Indian/ historically significant lands?	☐	☒
(8)	need/have ADEM SID permit coverage?	☐	☒
(9)	need/have ASMC permit coverage?	☐	☒
(10)	need/have ADIR permit coverage?	☐	☒
(11)	generate, treat, store, or dispose of hazardous or toxic waste ? (If "Yes," attach a detailed explanation.)	☐	☒
(12)	be located in or discharge to a Public Water Supply (PWS) watershed or be located within ½ mile of any PWS well?	☐	☒

VIII. MATERIAL TO BE REMOVED, PROCESSED, OR TRANSLOADED

List relative percentages of the mineral(s) or mineral product(s) that are proposed to be and/or are currently mined, quarried, recovered, prepared, processed, handled, transloaded, or disposed at the facility. **If more than one mineral is to be mined, list the relative percentages of each mineral by tonnage for the life of the mine.**

____Dirt &/or Chert	____Sand &/or Gravel	____Chalk	____Talc	____Crushed rock (other)
____Bentonite	____Industrial Sand	____Marble	____Shale &/or Common Clay	____Sandstone
____Coal	____Kaolin	____Coal fines/refuse recovery	____Coal product, coke	____Slag, Red Rock
____Fire clay	____Iron ore	____Dimension stone	____Phosphate rock	____Granite
____Bauxitic Clay	____Bauxite Ore	100% Limestone, crushed limestone and dolomite		

____ Gold, other trace minerals:_____ ____Other:_____

____Other:_____ ____Other:_____

____Other:_____ ____Other:_____

IX. PROPOSED ACTIVITY TO BE CONDUCTED

A. Type(s) of activity presently conducted at applicant's existing facility or proposed to be conducted at facility (check all that apply):

- ☒ Surface mining
- ☐ Underground mining
- ☒ Quarrying
- ☐ Auger mining
- ☐ Hydraulic mining
- ☐ Within-bank mining
- ☐ Solution mining
- ☒ Mineral storing
- ☐ Lime production
- ☐ Cement production
- ☐ Synthetic fuel production
- ☐ Alternative fuels operation
- ☒ Mineral dry processing (crushing & screening)
- ☒ Mineral wet preparation
- ☐ Other beneficiation & manufacturing operations
- ☒ Mineral loading
- ☐ Chemical processing or leaching
- ☐ Construction related temporary borrow pits/areas
- ☒ Mineral transportation ___rail ___barge X truck
- ☐ Preparation plant waste recovery
- ☐ Hydraulic mining, dredging, instream or between stream-bank mining
- ☒ Grading, clearing, grubbing, *etc.*
- ☐ Pre-construction ponded water removal
- ☐ Excavation
- ☐ Pre-mining logging or land clearing
- ☐ Waterbody relocation or other alteration
- ☒ Creek/stream crossings
- ☐ Onsite construction debris or equipment storage/disposal
- ☒ Onsite mining debris or equipment storage/disposal
- ☐ Reclamation of disturbed areas
- ☐ Chemicals used in process or wastewater treatment (coagulant, biocide, etc.)
- ☒ Adjacent/associated asphalt/concrete plant(s)
- ☐ Low volume sewage treatment package plant
- ☐ Other: _____

B. Primary SIC Code: 1422 Description: Crushed and broken limestone

Secondary SIC Code(s): _____ Description: _____

B. Narrative Description of the Activity:
This facility is a limestone quarry utilizing open pit mining. Processing includes drilling, blasting, loading, hauling, crushing, conveying, screening, stockpiling and shipping via customer truck.

X. FUEL – CHEMICAL HANDLING, STORAGE & SPILL PREVENTION CONTROL & COUNTERMEASURES (SPCC) PLAN

A. Will fuels, chemicals, compounds, or liquid waste be used or stored onsite? ☒ Yes ☐ No

B. If "Yes," identify the fuel, chemicals, compounds, or liquid waste and indicate the volume of each:

Volume	*Contents*	*Volume*	*Contents*	*Volume*	*Contents*
1,500 gallons	Diesel	5 (x ~6) gallons	lube oils (buckets)	gallons	
300 gallons	Diesel	gallons		gallons	

C. If "Yes," a detailed SPCC Plan with acceptable format and content, including diagrams, must be attached to application in accordance with ADEM Admin. Code R. 335-6-6-.12(r). Unless waived in writing by the Department on a programmatic, categorical, or individual compound/chemical basis, Material Safety Data Sheets (MSDS) for chemicals/compounds used or proposed to be used at the facility must be included in the SPCC Plan submittal.

XI. POLLUTION ABATEMENT & PREVENTION (PAP) PLAN

A. For non-coal mining facilities, a PAP Plan in accordance with ADEM Admin. Code r. 335-6-9-.03 has been completed and is attached as part of this application. ☒ Yes ☐ No

B. For coal mining facilities, a detailed PAP Plan has been submitted to ASMC according to submittal procedures for ASMC regulated facilities. ☐ Yes ☐ No

(1) If "Yes" to Part XI.B., provide the date that the PAP Plan was submitted to ASMC: _____

(2) If "No" to Part XI.B., provide the anticipated date that the PAP Plan will be submitted to ASMC: _____

XII. TOPOGRAPHIC MAP SUBMITTAL

Attach to this application a 7.5 minute series U.S.G.S. topographic map(s) or equivalent map(s) no larger than, or folded to a size of 8.5 by 11 inches (several pages may be necessary), of the area extending to at least one mile beyond property boundaries. The topographic or equivalent map(s) must include a caption indicating the name of the topographic map, name of the applicant, facility name, county, and township, range, & section(s) where the facility is located. Unless approved in advance by the Department, the topographic or equivalent map(s), at a minimum, must show:

(a) An outline of legal boundary of entire property (property lines and lease boundaries)
(b) An outline of the facility
(c) All existing and proposed disturbed areas
(d) Location of discharge areas
(e) Proposed and existing discharge points
(f) Perennial, intermittent, and ephemeral streams
(g) Lakes, springs, water wells, wetlands
(h) All known facility dirt/improved access/haul roads
(i) All surrounding unimproved/improved roads
(j) High-tension power lines and railroad tracks
(k) Buildings and structures, including fuel/water tanks
(l) Contour lines, township-range-section lines
(m) Drainage patterns, swales, washes
(n) All drainage conveyance/treatment structures (ditches, berms, etc.)
(o) Any other pertinent or significant feature

XIII. DETAILED FACILITY MAP SUBMITTAL

Attach to this application a 1:500 scale or better, detailed auto-CAD map(s) or equivalent map(s) no larger than, or folded to a size of 8.5 by 11 inches (several pages may be necessary), of the facility. The facility map(s) must include a caption indicating the name of the facility, name of the applicant, facility name, county, and township, range, & section(s) where the facility is located. Unless approved in advance by the Department, the facility or equivalent map(s), at a minimum, must show:

(a) Information listed in Item XII (a) – (o) above
(b) If noncoal, detailed, planned mining progression
(c) If noncoal, location of topsoil storage areas
(d) Location of ASMC bonded increments (if applicable)
(e) Location of mining or pond cleanout waste storage/disposal areas
(f) Other information relevant to facility or operation
(g) Location of facility sign showing Permittee name, facility name, and NPDES Number

XIV. RECEIVING WATERS

List the requested permit action for each outfall (issue, reissue, add, delete, move, etc.), outfall designation including denoting "E" for existing and "P" for proposed outfalls, name of receiving water(s), whether or not the stream is included in a TMDL, latitude and longitude (to seconds) of location(s) of each discharge point, distance of receiving water from outfall in feet, number of disturbed acres, the number of drainage acres which will drain through each treatment system, outfall, or BMP, and if the outfall discharges to an ADEM listed CWA Section 303(d) waterbody segment at the time of application submittal.

Action	Outfall E/P	Receiving Water	Latitude	Longitude	Distance to Rec. Water	Disturbed Acres	Drainage Acres	ADEM WUC	303(d) Segment (Y/N)	TMDL Segment* (Y/N)
Reissue	001E	UT to Sand Branch	N34° 42' 12"	W 86° 23' 07"	150'	2.1	30	F/W	N	N
Reissue	002P	Hurricane Creek	N34° 42' 39"	W 86° 23' 45"	75'	14.8	34	F/W	N	Y
Reissue	003P	Hurricane Creek	N34° 42' 38"	W 86° 23' 46"	75'	19.7	19.7	F/W	N	Y
Reissue	004P	UT to Hurricane Creek	N34° 42' 46"	W 86° 23' 58"	275'	26.2	26.2	F/W	N	N
Reissue	005P	UT to Hurricane Creek	N34° 42' 53"	W 86° 23' 55"	50'	53	53	F/W	N	N
Reissue	006P	UT to Hurricane Creek	N34° 42' 45"	W 86° 24' 04"	125'	14	14	F/W	N	N

*If a TMDL Compliance Schedule is requested, the following should be attached as supporting documentation: (1) Justification for the requested Compliance Schedule (e.g. time for design and installation of control equipment, etc.); (2) Monitoring results for the pollutant(s) of concern which have not previously been submitted to the Department (sample collection dates, analytical results (mass and concentration), methods utilized, MDL/ML, etc. should be reported as available); (3) Requested interim limitations, if applicable; (4) Date of final compliance with the TMDL limitations; and (5) Any other additional information available to support the requested compliance schedule.

XV. DISCHARGE CHARACTERIZATION

A. Modified EPA Form 2C Submittal

☒ Yes, pursuant to 40 CFR 122.21, the applicant requests a waiver for completion of the modified EPA Form 2C and certifies that the operating facility will discharge treated stormwater only, unless waived in writing by the Department on a programmatic, categorical, or individual compound/chemical basis that chemical/compound additives are not used, and that there are no process, manufacturing, or other industrial operations or wastewaters, including but not limited to lime or cement production, synfuel operations, *etc.*, and that coal and coal products are not mined nor stored onsite.

☐ No, the applicant does not request a waiver and a complete modified EPA Form 2C is attached.

B. The applicant is required to supply the following information separately for every P or E outfall. If necessary, attach extra sheets. List expected average daily discharge flow rate in cfs and gpd, frequency of discharge in hours per day and days per month, average summer and winter temperature of discharge(s) in degrees centigrade (C), average pH in standard units, average daily discharge in pounds per day of BOD_5, Total Suspended Solids, Total Iron, Total Manganese, and Total Aluminum (if bauxite or bauxitic clay):

Outfall E/P	Information Source - # of Samples	Flow cfs	Flow gpd	Frequency hours/day	Frequency days/mth	Sum/Win Temp, °C	pH s.u.	BOD_5 lbs/day	TSS lbs/day	Tot Fe lbs/day	Tot Mn lbs/day	Tot Al lbs/day
001E	***	0.007	4400	Rain driven	Rain driven	26.7/4.4	7.62	0.6	0.221	0.0007	0.0002	N/A
002P	***	5.57	1,200K	8 hrs/day	20 days/mo	26.7/4.4	7.62	0.6	60.32	0.201	0.055	N/A
003P	***	0.007	4400	Rain driven	Rain driven	26.7/4.4	7.62	0.6	0.221	0.0007	0.0002	N/A
004P	***	0.007	4400	Rain driven	Rain driven	26.7/4.4	7.62	0.6	0.221	0.0007	0.0002	N/A
005P	***	0.007	4400	Rain driven	Rain driven	26.7/4.4	7.62	0.6	0.221	0.0007	0.0002	N/A
006P	***	0.007	4400	Rain driven	Rain driven	26.7/4.4	7.62	0.6	0.221	0.0007	0.0002	N/A

*** Existing outfall 001E is precipitation driven and has had no measurable discharge. All other outfalls are proposed and no data exists for the site.

All information provided above is based on data from a similar Vulcan operation in this region (Fort Payne Quarry). Proposed outfall 002P will be pumped discharge (max 2500 gpm). All other discharge points will be precipitation driven.

C. The applicant is required to supply the following information separately for every P or E outfall. If necessary, attach extra sheets. Identify and list expected average daily discharge in pounds per day of any other pollutant(s) listed in EPA Form 2C, Item V – Intake And Effluent Characteristics, Parts A, B, & C that are not referenced in Part XV.B., that you know is present or have reason to believe could be present in the discharge(s) at levels of concern:

Outfall E/P	Reason Believed Present	Information Source - # of Samples									
			lbs/day	lbs/day	lbs/day	lbs/day	lbs/day	lbs/day	lbs/day	lbs/day	lbs/day
None											

XVI. DISCHARGE STRUCTURE DESCRIPTION & POLLUTANT SOURCE

The applicant is required to supply outfall number(s) as it appears on the map(s) required by this application [if this application is for a modification to an existing permit do not change the numbering sequence of the permitted outfalls], describe each, (*e.g.*, pipe, spillway, channel, tunnel, conduit, well, discrete fissure, or container), and identify the origin of pollutants. The response must be precise for each outfall. If the discharge of pollutants from any outfall is the result of commingling of waste streams from different origins, each origin must be completely described.

Outfall	Discharge structure Description	Description of Origin Of pollutants	Surface Discharge	Groundwater Discharge	Wet Prep -Other Production Plant	Pumped or Controlled Discharge	Low Volume STP	Other
001E	Pipe with spillway	(10)	x					
002P	Pipe with spillway	(7) (10)	x			x		
003P	Pipe with spillway	(10)	x		x			
004P	Pipe with spillway	(10)	x					
005P	Pipe with spillway	(10)	x					
006P	Pipe with spillway	(10)	x					

Origin of Pollutants – typical examples: **(1)** Discharge of drainage from the underground workings of an underground coal mine, **(2)** Discharge of drainage from a coal surface mine, **(3)** Discharge of drainage from a coal preparation plant and associated areas, **(4)** Discharge of process wastewater from a gravel-washing plant, **(5)** Discharge of wastewater from an existing source coal preparation plant, **(6)** Discharge of drainage from a sand and gravel pit, **(7)** Pumped discharge from a limestone quarry, **(8)** Controlled surface mine drainage (pumped or siphoned), **(9)** Discharge of drainage from mine reclamation, **(10) Other**: Storm water runoff from disturbed quarry property

XVII. PROPOSED NEW OR INCREASED DISCHARGES

A. Pursuant to ADEM Admin. Code Chapter 335-6-10-.12(9), responses to the following questions must be provided by the applicant requesting NPDES permit coverage for new or expanded discharges of pollutant(s) to Tier 2 waters (except discharges eligible for coverage under general permits). As part of the permit application review process, the Department is required to consider, based on the applicant's demonstration, whether the proposed new or increased discharge to Tier 2 waters is necessary for important economic or social development in the area in which the waters are located.

☐ Yes. New/increased discharges of pollutant(s) or discharge locations to Tier 2 waters are proposed.

☒ No. New/increased discharges of pollutants(s) or discharge locations to Tier 2 waters are not proposed.

B. If "Yes," complete this Part (XVII.B.), Part XVIII, and XIX. **Attach additional sheets/documentation and supporting information as needed.**

(1) What environmental or public health problem will the discharge be correcting?

N/A

(2) How much will the discharger be increasing employment (at its existing facility or as a result of locating a new facility)?

N/A

(3) How much reduction in employment will the discharger be avoiding?

N/A

(4) How much additional state or local taxes will the discharger be paying?

N/A

(5) What public service to the community will the discharger be providing?

N/A

(6) What economic or social benefit will the discharger be providing to the community?

N/A

XVIII. ALTERNATIVES ANALYSIS – ADEM Form 311 3/02

Pursuant to ADEM Admin. Code Chapter 335-6-10, an evaluation of the discharge alternatives identified below has been completed and the following conclusions were reached. All proposed new or expanded discharges of pollutant(s) covered by the Individual NPDES permitting program are subject to the provisions of the antidegradation policy. As part of the permit application review process, the Department is required to determine, based on the applicant's demonstration, that the proposed new or increased discharge to Tier 2 waters is necessary for important economic or social development in the area in which the waters are located. As a part of this demonstration, a registered professional engineer (PE) licensed to practice in the State of Alabama must complete an evaluation of the discharge alternatives, to include calculation of total annualized project costs (Item XIX) for each technically feasible alternative. Technically feasible alternatives with total annualized pollution control project costs that are less than 110% of the preferred alternative total annualized pollution control project costs for the Tier 2 new or increased discharge proposal are considered viable alternatives. **Supporting documentation is attached, referenced, or otherwise handled as appropriate.**

Alternative	Viable	Non-Viable	Reason/Rationale For Indicating Non-Viable
1) Treatment/Discharge Proposed In This Application	X		
2) Land Application		X	Quantity of water too great for this option.
3) Pretreatment/Discharge to POTW By SID Permit		X	POTW not available and quantity too large.
4) Relocation of Discharge		X	Topography does not support this alternative.
5) Reuse/Recycle – Pollution Prevention	X		Some water will be recycled but quantity too great for all
6) Other Process/Treatment Alternatives		X	Retention/settling best available viable technology
7) Underground Injection By UIC Permit		X	Quantity of water too great for UIC injection
8) Other Project Specific Alternative(s) Identified By the Applicant Or The ADEM			
9) Other Project Specific Alternative(s) Identified By the Applicant Or The ADEM			

COMMENTS: _____

XIX. CALCULATION OF TOTAL ANNUALIZED PROJECT COSTS FOR PRIVATE SECTOR PROJECTS - ADEM Form 313 8/02
(ADEM Form 312 3/02 - Public Sector Project is available upon request)

This item must be completed for each technically feasible alternative evaluated in Item XVIII. **Copy, complete, and attach additional blocks/sheets and supporting information as needed.**

Capital Costs of pollution control project to be expended or financed by applicant (Supplied by applicant) **Expensed**	$ 188,640 (1)	
Interest Rate for Financing (Expressed as a decimal)	_____ (i)	
Time Period of Financing (Assume 10 years *)	_____ (n)	
Annualization Factor ** = $\frac{i}{(1+i)^{10}-1} + i$ i = Interest Rate	_____ (2)	
Annualized Capital Cost [Calculate: (1) x (2)]	$_____ (3)	
Annual Cost of Operation & Maintenance (including but not limited to monitoring, inspection, permitting fees, waste disposal charges, repair, administration & replacement) ***	$ 1,200 (4)	
Total Annual Cost of Pollution Control Project [(3) + (4)]	**$ 1,200 (5)**	

* While actual payback schedules may differ across projects and companies, assume equal annual payments over a 10-year period for consistency in comparing projects.

** Or refer to Appendix B (application information) for calculated annualization factors.

*** For recurring costs that occur less frequently than once a year, pro rate the cost over the relevant number of years (e.g., for pumps replaced once every three years, include one-third of the cost in each year).

XX. POLLUTION ABATEMENT PLAN (PAP) SUMMARY

Outfall(s): 001E, 002P, 003P, 004P, 005P, 006P

Y	N	N/A	
x			Runoff from all areas of disturbance is controlled
x			Drainage from pit area, stockpiles, and spoil areas directed to a sedimentation pond
x			Sedimentation basin at least 0.25 acre/feet for every acre of disturbed drainage
x			Sedimentation basin cleaned out when sediment accumulation is 60% of design capacity
x			Trees, boulders, and other obstructions removed from pond during initial construction
		x	Width of top of dam greater than 12'
		x	Side slopes of dam no steeper than 3:1
		x	Cutoff trench at least 8' wide
		x	Side slopes of cutoff trench no less than 1:1
		x	Cutoff trench located along the centerline of the dam
		x	Cutoff trench extends at least 2' into bedrock or impervious soil
		x	Cutoff trench filled with impervious material
		x	Embankments and cutoff trench 95% compaction standard proctor ASTM
		x	Embankment free of roots, tree debris, stones >6" diameter, etc.
		x	Embankment constructed in lifts no greater than 12"
x			Spillpipe sized to carry peak flow from a one year storm event
x			Spillpipe will not chemically react with effluent
x			Subsurface withdrawal
x			Anti-seep collars extend radially at least 2' from each joint in spillpipe
x			Splashpad at the end of the spillpipe
		x	Emergency Spillway sized for peak flow from 25-yr 24-hr event if discharge not into PWS classified stream
		x	Emergency spillway sized for peak flow from 50-yr 24-hr event if discharge is into PWS classified stream
		x	Emergency overflow at least 20' long
		x	Side slopes of emergency spillway no steeper than 2:1
		x	Emergency spillway lined with riprap or concrete
x			Minimum of 1.5' of freeboard between normal overflow and emergency overflow
		x	Minimum of 1.5' of freeboard between max. design flow of emergency spillway and top of dam
		x	All emergency overflows are sized to handle entire drainage area for ponds in series
		x	Dam stabilized with permanent vegetation
x			Sustained grade of haul road <10%
x			Maximum grade of haul road <15% for no more than 300'
x			Outer slopes of haul road no steeper than 2:1
x			Outer slopes of haul road vegetated or otherwise stabilized
x			Detail drawings supplied for all stream crossings
		x	Short-Term Stabilization/Grading And Temporary Vegetative Cover Plans
		x	Long-Term Stabilization/Grading And Permanent Reclamation or Water Quality Remediation Plans

x	The applicant has completed the surface water discharge alternatives analysis and has supporting documentation, including annualized costs for each technically feasible alternative available for review upon request

IDENTIFY AND PROVIDE DETAILED EXPLANATION FOR ANY "N" OR "N/A" RESPONSE(s):

Ponds will be incised (excavated below surrounding ground level). No dams will be constructed. Discharge pipes will be sized for emergency overflow. Discharge is not into a PWS classified stream. When operations at this facility cease, measures to protect water quality will be implemented as outlined in Part I. B. 1(b) of the permit.

XXI. POLLUTION ABATEMENT PLAN (PAP) REVIEW CHECKLIST

Y	N	N/A	
X			PE Seal with License #
X			Name and Address of Operator
X			Legal Description of Facility
			General Information:
X			Name of Company
X			Number of Employees
X			Products to be Mined
X			Hours of Operation
X			Water Supply and Disposition
			Topographic Map:
X			Mine Location
X			Location of Prep Plant
X			Location of Treatment Basins
X			Location of Discharge Points
X			Location of Adjacent Streams
			1"- 500' or Equivalent Facility Map:
X			Drainage Patterns
X			Mining Details
X			All Roads, Structures Detailed
X			All Treatment Structures Detailed
			Detailed Design Diagrams:
X			Plan Views
X			Cross-section Views
X			Method of Diverting Runoff to Treatment Basins
			Narrative of Operations:
X			Raw Materials Defined
X			Processes Defined
X			Products Defined
			Schematic Diagram:
X			Points of Waste Origin
X			Collection System
X			Disposal System
			Post Treatment Quantity and Quality of Effluent:
X			Flow
X			Suspended Solids
X			Iron Concentration
X			pH
			Description of Waste Treatment Facility:
X			Pre-Treatment Measures
X			Recovery System
X			Expected Life of Treatment Basin
X			Schedule of Cleaning and/or abandonment
			Other:
X			Precipitation/Volume Calculations/Diagram Attached
X			BMP Plan for Haul Roads
X			Measures for Minimizing Impacts to Adjacent Stream i.e., Buffer Strips, Berms, etc.
X			Methods for Minimizing Nonpoint Source Discharges
X			Facility Closure Plans
		X	PE Rationale(s) For Alternate Standards, Designs or Plans

IDENTIFY AND PROVIDE DETAILED EXPLANATION FOR ANY "N" OR "N/A" RESPONSE(s):

XXII. INFORMATION

Contact the Department prior to submittal with any questions or to request acceptable alternate content/format. Be advised that you are not authorized to commence regulated activity until this application can be processed, publicly noticed, and approval to proceed is received in writing from the Department.

EPA Form(s) 1 and 2F need not be submitted unless specifically required by the Department. EPA Form(s) 2C and/or 2D are required to be submitted unless the applicant is eligible for a waiver and the Department grants a waiver.

Planned/proposed mining sites that are greater than 5 acres, that mine/process coal or metallic mineral/ore, or that have wet or chemical processing, must apply for and obtain coverage under and Individual NPDES Permit prior to commencement of any land disturbance. Such coverage may be requested via this ADEM Form 315.

The applicant is advised to contact:

(1) The Alabama Surface Mining Commission (ASMC) if coal, coal fines, coal refuse, or other coal related materials are mined, transloaded, processed, *etc.*;
(2) The Alabama Department of Industrial Relations (ADIR) if conducting non-coal mining operations;
(3) The Alabama Historical Commission for requirements related to any potential historic or culturally significant sites;
(4) The Alabama Department of Conservation and Natural Resources (ADCNR) for requirements related to potential presence of threatened/endangered species; and
(5) The US Army Corps of Engineers, Mobile or Nashville Districts, if this project could cause fill to be placed in federal waters or could interfere with navigation.

The Department must be in receipt of a completed version of this form, including any supporting documentation, and the appropriate processing fee (including Greenfield Fee and Biomonitoring & Toxicity Limits fee(s), if applicable), prior to development of a draft NPDES permit. Send the completed form, supporting documentation, and the appropriate fees to:

Water Division
Alabama Department of Environmental Management
Post Office Box 301463
Montgomery, Alabama 36130-1463
Phone: (334) 271-7823
Fax: (334) 279-3051
h2omail@adem.state.al.us
www.adem.alabama.gov

XXIII. PROFESSIONAL ENGINEER (PE) CERTIFICATION

A detailed, comprehensive Pollution Abatement/Prevention Plan (PAP) must be prepared, signed, and certified by a professional engineer (PE), registered in the State of Alabama as follows:

"I certify on behalf of the applicant, that I have completed an evaluation of discharge alternatives (Item XVIII) for any proposed new or increased discharges of pollutant(s) to Tier 2 waters and reached the conclusions indicated. I certify under penalty of law that technical information and data contained in this application, and a comprehensive PAP Plan including any attached SPCC plan, maps, engineering designs, etc. acceptable to ADEM. for the prevention and minimization of all sources of pollution in stormwater and authorized related process wastewater runoff has been prepared under my supervision for this facility utilizing effective, good engineering and pollution control practices and in accordance with the provisions of ADEM Admin. Code Division 335-6 , including Chapter 335-6-9 and Appendices A & B. If the PAP plan is properly implemented and maintained by the Permittee, discharges of pollutants can reasonably be expected to be effectively minimized to the maximum extent practicable and according to permit discharge limitations and other permit requirements. The applicant has been advised that appropriate pollution abatement/prevention facilities and structural & nonstructural management practices or Department approved equivalent management practices as detailed in the PAP plan must be fully implemented and regularly maintained as needed at the facility in accordance with good sediment, erosion, and other pollution control practices, permit requirements, and other ADEM requirements to ensure protection of groundwater and surface water quality."

Address 1200 Urban Center Drive, Birmingham, AL 35242 PE Registration # AL 21058

Name and Title (type or print) Edwin E.Jones Phone Number 205-298-3706

Signature Edwin E. Jones Date Signed 8/16/13

XXIV. RESPONSIBLE OFFICIAL SIGNATURE*

This application must be signed by a Responsible Official of the applicant pursuant to ADEM Admin. Code Rule 335-6-6-.09 who has overall responsibility for the operation of the facility.

"I certify under penalty of law that this document, including technical information and data, the PAP plan, including any SPCC plan, maps, engineering designs, and all other attachments were prepared under my direction or supervision in accordance with a system designed to assure that qualified personnel properly gathered and evaluated the information submitted. Based on my inquiry of the PE and other person or persons under my supervision who manage the system or those persons directly responsible for gathering the information, the information submitted is, to the best of my knowledge and belief, true, accurate, and complete. I am aware that there are significant penalties for submitting false information including the possibility of fine or imprisonment for knowing violations.

A comprehensive PAP Plan to prevent and minimize discharges of pollution to the maximum extent practicable has been prepared at my direction by a PE for this facility utilizing effective, good engineering and pollution control practices and in accordance with the provisions of ADEM Admin. Code Division 335-6, including Chapter 335-6-9 and Appendices A & B, and information contained in this application, including any attachments. I understand that regular inspections must be performed by, or under the direct supervision of, a PE and all appropriate pollution abatement/prevention facilities and structural & nonstructural management practices or Department approved equivalent management practices identified by the PE must be fully implemented prior to and concurrent with commencement of regulated activities and regularly maintained as needed at the facility in accordance with good sediment, erosion, and other pollution control practices and ADEM requirements. I understand that the PAP plan must be fully implemented and regularly maintained so that discharges of pollutants can reasonably be expected to be effectively minimized to the maximum extent practicable and according to permit discharge limitations and other requirements to ensure protection of groundwater and surface water quality. I understand that failure to fully implement and regularly maintain required management practices for the protection of groundwater and surface water quality may subject the Permittee to appropriate enforcement action.

I certify that this form has not been altered, and if copied or reproduced, is consistent in format and identical in content to the ADEM approved form.

I further certify that the discharges described in this application have been tested or evaluated for the presence of non-stormwater discharges and any non-mining associated beneficiation/process pollutants and wastewaters have been fully identified."

Name (type or print) Sherrod B.Clarke, Jr. Official Title Vice President/General Manager

Signature Sherrod B. Clarke Jr Date Signed 8/26/13

*335-6-6-.09 Signatories to Permit Applications and Reports.

(1) The application for an NPDES permit shall be signed by a responsible official, as indicated below:
   - (a) In the case of a corporation, by a principal executive officer of at least the level of vice president, or a manager assigned or delegated in accordance with corporate procedures, with such delegation submitted in writing if required by the Department, who is responsible for manufacturing, production, or operating facilities and is authorized to make management decisions which govern the operation of the regulated facility;
   - (b) In the case of a partnership, by a general partner;
   - (c) In the case of a sole proprietorship, by the proprietor: or
   - (d) In the case of a municipal, state, federal, or other public entity by either a principal executive officer, or ranking elected official.

ADDENDUM #1

List of Company Officers and Directors

Vulcan Materials Company

Subsidiary/Affiliated Company - Officers and Directors

Legacy Vulcan Corp.		*Director*	*Checked = Active* ✓
D. M. James	Chairman and Chief Executive Officer	○	
D. F. Sansone	Executive Vice President and Chief Financial Officer	◉	
D. R. Shepherd	Executive Vice President and Chief Operating Officer	○	
J. W. Houston	Senior Vice President - Human Resources	○	
M. R. Mills	Senior Vice President, General Counsel, and Assistant Secretary	◉	
S. G. Bass	Senior Vice President - Central Region	○	
J. R. McPherson	Senior Vice President - East Region	○	
J. T. Hill	Senior Vice President - South Region	○	
S. G. Bass	Senior Vice President - West Region	○	
D. A. Donaldson	Vice President-Governmental and Community Relations	○	
N. Jetmundsen, Jr.	Vice President, Associate General Counsel, and Assistant Secretary	○	
E. A. Khan	Vice President, Controller, and Chief Information Officer	◉	
J. F. Perkins Jr.	Secretary	○	
J. R. Averitt	Assistant Secretary	○	
L. L. Sinor	Assistant Secretary	○	
A. M. Tucker	Assistant Secretary	○	
C. W. Burton, Jr.	Treasurer	○	
M. G. Brooke	Assistant Treasurer	○	
K. T. Halcomb	Assistant Treasurer	○	

Vulcan Materials Company

Subsidiary/Affiliated Company - Officers and Directors

Vulcan Aggregates Company, LLC		*Director*	*Checked = Active* ✓
D. F. Sansone	Chairman	○	
M. R. Mills	President	○	
J. F. Perkins Jr.	Vice President and Secretary	○	
C. W. Burton, Jr.	Vice President and Treasurer	○	
J. W. Houston	Vice President and Assistant Secretary	○	
J. R. Averitt	Assistant Secretary	○	
M. G. Brooke	Assistant Treasurer	○	
K. T. Halcomb	Assistant Treasurer	○	

Vulcan Materials Company

Subsidiary/Affiliated Company - Officers and Directors

Vulcan Construction Materials, LP		*Director*	*Checked - Active*
D. M. James	Chairman	○	
D. F. Sansone	President	○	
S. G. Bass	Senior Vice President - Central Region	○	
J. R. McPherson	Senior Vice President - East Region	○	
J. T. Hill	Senior Vice President - South Region	○	
E. A. Khan	Vice President	○	
D. R. Shepherd	Vice President	○	
M. R. Mills	Vice President and Assistant Secretary	○	
J. W. Houston	Vice President and Assistant Secretary	○	
C. W. Burton, Jr.	Vice President and Treasurer	○	
J. F. Perkins Jr.	Secretary	○	
J. R. Averitt	Assistant Secretary	○	
N. Jetmundsen, Jr.	Assistant Secretary	○	
S. J. Nabors	Assistant Secretary	○	
L. L. Sinor	Assistant Secretary	○	
A. M. Tucker	Assistant Secretary	○	
M. G. Brooke	Assistant Treasurer	○	
K. T. Halcomb	Assistant Treasurer	○	

ADDENDUM #2

List of Regulatory Agency Enforcement Activities

ADDENDUM #2

Date of Issuance	Date of Alleged Violation	Facility	Enforcement Action	Alleged Violation	Abatement Actions	Date of Final Resolution

There have been no Warning Letters, NOVs, Administrative Actions, Directives, or litigation filed by ADEM or EPA during the three year (36 month) period preceding the date on which this application form is signed issued to Vulcan Construction Materials, LP.

ADDENDUM #3

List of Regulatory Permits – Air and Water

Vulcan Construction Materials, LP
Southern and Gulf Coast Area
Air Permits

Facility	Facility Number	Permits Number	Permitting Authority
Bessemer Quarry	407-0414	02	JefCo
Birmingham Slag	407-0408	002	JefCo
Bay Bridge Yard	503-0080	X001	ADEM
Calera Quarry	411-0011	X010, X012, X013, X014	ADEM
Cherokee Quarry	701-0014	X003, X004, X005, X006	ADEM
Childersburg Quarry	309-0028	X005, X006, X007	ADEM
Decatur Barge	712-0054	X001	ADEM
Dolcito Quarry	4-07-0119	02	JefCo
Fairfield Slag	407-0425	9401	JefCo
Fort Payne Quarry	703-0001	X010, X011, X013	ADEM
Glencoe Quarry	307-0011	Z001, Z002, Z003, Z004	ADEM
Grant Quarry	711-0052	X001	ADEM
Gurley Quarry	709-0022	X002	ADEM
Helena Quarry	411-0010	Z001, Z002, Z003, Z004	ADEM
Huntsville Quarry	709-P110	Z001	H'ville DNR
Lacon Quarry	712-0014	X003, X004	ADEM
Lakeshore Quarry	4-07-0498	001-03	JefCo
North Birmingham Quarry	4-07-0548	001-02	JefCo
Notasulga Quarry I(Original)	206-0043	X001, X002, X003	ADEM
Notasulga Quarry II (West Lee)	206-0039	X003, X004, X005	ADEM
Ohatchee Quarry	301-0045	Z001, X003	ADEM
Pride Quarry	701-0048	X001, X002, X003	ADEM
Roberta Quarry	411-0028	X011, X012, X013, X016	ADEM
Rock Spring Quarry	307-0044	X001, X002	ADEM
Scottsboro Quarry	705-0005	Z004, Z005, Z006, Z007	ADEM
South Russellville Quarry	704-0014	X001	ADEM
Springville Quarry	410-0024	X002	ADEM
Trinity Quarry	712-0012	X006, X007, X008, X009	ADEM
Tuscaloosa Quarry	413-0074	Z001	ADEM
Tuscumbia Quarry	701-0017	Z001	ADEM
Village Springs	402-0015	X001	ADEM

Vulcan Construction Materials, LP
Southern and Gulf Coast Area
NPDES Permits

Plant	Permit Number
Atmore Sand and Gravel	AL0059498
Bessemer Quarry	AL 0069035
Blakeley Island Sales Yard	ALG230064
Bay Bridge Sales Yard	ALG230068
Calera Quarry	AL 0002046
Cherokee Quarry	AL 0056391
Childersburg Quarry	AL 0002313
Dolcito Quarry	AL 0023892
Fort Payne Quarry	AL 0055778
Glencoe Quarry	AL 0002020
Grant Quarry	AL 0075698
Gurley Quarry	AL 0075507
Helena Quarry	AL 0001996
Huntsville Quarry	AL 0055964
Lacon Quarry	AL 0041891
Lakeshore Quarry	AL 0074888
Notasulga Quarry I (Original)	AL 0074969
Notasulga Quarry II (West Lee)	AL0074357
Ohatchee Quarry	AL 0002186
Pride Quarry	AL0072036
Roberta Quarry	AL 0053601
Rock Spring Quarry	AL 0076996
Scottsboro Quarry	AL 0000256
South Russellville Quarry	AL 0072117
Springville Quarry	AL 0072214
Theodore Sales Yard	ALG230063
Trinity Quarry	AL 0041921
Tuscaloosa Quarry	AL 0070459
Tuscumbia Quarry	AL 0000264
Village Springs Quarry	AL 0075108

Vulcan
Materials Company

SPILL PREVENTION CONTROL AND COUNTERMEASURE PLAN

Gurley Quarry

Vulcan Construction Materials, LP
1200 Urban Center Drive
Birmingham, AL 35242

GENERAL INFORMATION & EMERGENCY CONTACT LIST

Gurley Quarry
5625 Highway 72 East, Gurley, AL 35748

Directions: From Huntsville, AL, take I-565 E and continue east as it turns into US-72 E. Go approximately ten miles to Gurley, AL and the quarry is on the left just before entering the town of Gurley.

Designated Person Responsible for Spill Prevention: Joey West
Type of Operation: Limestone Quarry

CONTACT:	PHONE NUMBER:	MOBILE NUMBER:
Primary Facility Contact: Joey West Plant Manager	256-852-0411(office) 256-773-4798 (home)	256-898-5018
Alternate Facility Contact: Alan Gulledge Area Operations Manager	256-492-4610 (office) 256-492-7018 (home)	256-490-5332
Environmental Department Contact: Joe Howle Environmental Manager	205-298-3230(office) 205-655-0650(home)	205-790-2478
Environmental Department Contact: Stacy Whittington Environmental Specialist	205-298-3482 (office) 205-823-8487 (home)	205-908-0837
Environmental Department Contact: Holly Carmichael Environmental Specialist	205-298-3073 (office)	205-410-6401
Primary Contractor Contact: Hepaco	1-800-888-7689	24-hour Hotline
National Response Center	(800) 424-8802	24-hour Hotline
U.S. EPA Region 4	404-562-8700	24-hour Hotline
Alabama Dept. of Environmental Management	334-271-7700 800-843-0699	24-hour Hotline
Madison County EMA	256-532-7290	24-hour Hotline
Fire/Ambulance/Police	911	24-hour Hotline

DISTRIBUTION LIST

- Plant Manager – Hard Copy & Digital Copy
- Area Manager – Digital Copy Only
- Environmental Personnel – Hard Copy & Digital Copy

Per 40 CFR 112.3(e), an up-to-date copy of this plan shall be maintained at the facility if the facility is normally attended at least four hours per day or at the division office if the facility is not so attended.

TABLE OF CONTENTS

GENERAL INFORMATION & EMERGENCY CONTACT LIST 1

DISTRIBUTION LIST 2

GENERAL APPLICABILITY [40 CFR 112.1] 5

PROFESSIONAL ENGINEER CERTIFICATION [40 CFR 112.3(d)] 7

WRITTEN REPORTS [40 CFR 112.4] 8

SPCC AMENDMENT [40 CFR 112.5] 9
- Table 1.0 – Review and Evaluation Log 10

MANAGEMENT APPROVAL [40 CFR 112.7] 11

GENERAL REQUIREMENTS [40 CFR 112.7] 12
- Facility Information [40 CFR 112.7(a)(3)] 12
- Table 2.0 – Storage and Handling Capacity 14
- Spill Reporting Procedures [40 CFR 112.7(a)(4)] 16
- Spill Response Procedures [40 CFR 112.7(a)(5)] 17
- Table 3.0 – Potential Spill Scenarios [40 CFR 112.7(b)] 18
- Containment and Diversionary Structures [40 CFR 112.7(c)] 19
- Demonstration of Practicability [40 CFR 112.7(d)] 19
- Inspections, Tests, and Records [40 CFR 112.7(e)] 19
- Personnel, Training, and Discharge Prevention [40 CFR 112.7(f)] 21
- Security [40 CFR 112.7(g)] 22
- Facility Loading/Unloading Procedures [40 CFR 112.7(h)] 22
- Field Constructed Aboveground Storage Tanks [40 CFR 112.7(i)] 23
- Conformance with Applicable Standards [40 CFR 112.7(j)] 23

SPECIFIC REQUIREMENTS [40 CFR 112.8] 23
- Facility Drainage [40 CFR 112.8(b)] 23
- Bulk Storage Containers [40 CFR 112.8(c)] 23
- Facility Transfer Operations [40 CFR 112.8(d)] 25

CERTIFICATION OF APPLICABILITY OF THE SUBSTANTIAL HARM CRITERIA [40 CFR 112.20(e)] 27

TABLE OF CONTENTS

APPENDIX A –FIGURES

Figure 1.0 – SPCC Facility Diagram

APPENDIX B –SPILL RESPONSE INFORMATION

Spill Response Equipment List
Spill Report Form

APPENDIX C – RECORDS

SPCC Inspection Forms
SPCC Training Logs
SPCC Drainage Logs
P.E. Certifications

GENERAL APPLICABILITY

40 CFR 112.1

This Spill Prevention, Control, and Countermeasure (SPCC) Plan has been prepared for Vulcan Materials Company – Gurley Quarry pursuant to Federal Regulations promulgated in 1973 [Code of Federal Regulations, Title 40, Chapter I, Subchapter D, Part 112 – Oil Pollution Prevention] and revised on August 16, 2002. The objective of the SPCC plan is to prevent the discharge of oil from non-transportation related onshore and offshore facilities into or upon the navigable waters of the United States or adjoining shorelines.

For the purpose of this part, the following are defined in 40 CFR 112.2:

"Oil" means oil of any kind or in any form, including, but not limited to: fats, oils, or greases of animal, fish, or marine mammal origin; vegetable oils, including oils from seeds, nuts, fruits, or kernels; and, other oils and greases, including petroleum, fuel oil, sludge, synthetic oils, mineral oils, oil refuse, or oil mixed with wastes other than dredged spoil. *[This definition of oil includes transformer oil.]*

"Discharge" includes, but is not limited to, any spilling, leaking, pumping, pouring, emitting, emptying, or dumping of oil.

"Navigable Water" means the waters of the United States, including the territorial seas, and the term includes:

1.) All waters that are currently used, were used in the past, or may be susceptible to use in interstate or foreign commerce, including all waters subject to the ebb and flow of the tide;
2.) All interstate waters, including interstate wetlands;
3.) All other waters such as intrastate lakes, rivers, streams, mudflats, sandflats, wetlands, sloughs, prairie potholes, wet meadows, playa lakes, or natural ponds, the use, degradation, or destruction of which could affect interstate or foreign commerce including any such waters:
    a. That are or could be used by interstate or foreign travelers for recreational or other purposes; or
    b. From which fish or shellfish are or could be taken and sold in interstate or foreign commerce; or
    c. That are or could be used for industrial purposes by industries in interstate commerce;
4.) All impoundments of waters otherwise defined as waters of the United States under this section;
5.) Tributaries of navigable waters as defined above;
6.) The territorial sea; and
7.) Wetlands adjacent to waters (other than waters that are themselves wetlands) identified in this definition.

This part applies to any owner or operator of a non-transportation related onshore and offshore facility engaged in drilling, producing, gathering, storing, processing, refining, transferring, distributing, using, or consuming oil and oil products, which due to its location, could reasonably be expected to discharge oil in quantities that may be harmful.

Harmful quantities include discharges of oil that:

1.) Violate applicable water quality standards, or;
2.) Cause a film or sheen upon or discoloration of the surface of the water or adjoining shorelines or cause a sludge or emulsion to be deposited beneath the surface of the water or upon adjoining shorelines.

More specifically, this part establishes that the regulations apply to:

1.) All facilities that have an above ground aggregate storage capacity exceeding 1,320 gallons of oil. (All containers with volumes less than 55 gallons are exempt.)

2.) All facilities that have a completely buried storage capacity greater than 42,000 gallons of oil, excluding containers that are "permanently closed".

PROFESSIONAL ENGINEER CERTIFICATION

40 CFR 112.3 (d)

By means of this certification, I attest that I am familiar with the requirements of provisions of 40 CFR 112, that I or my designated agent have visited and examined the facility, that this SPCC Plan has been prepared in accordance with good engineering practices, including consideration of applicable industry standards, and with the requirements of this Part, that procedures for required inspections and testing have been established and that the Plan is adequate for the facility.

x Edwin E. Jones
Signature

8/16/13
Date

Engineer: Edwin E. Jones
License Number: _____
State: AL

Seal

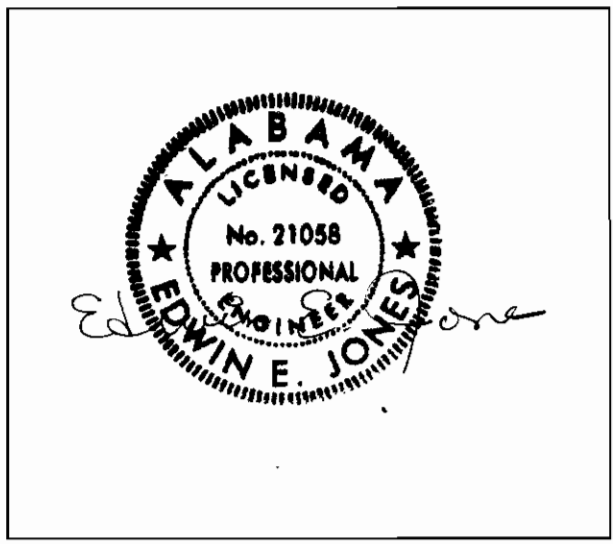

WRITTEN REPORTS

40 CFR 112.4

A written report is required to be sent to the Regional Administrator of the U.S. EPA and the appropriate state agency(s) in charge of oil pollution control activities within 60 days of any spill event when:

(1) A discharge of over 1,000 U.S. gallons of oil occurs in a single discharge as described in 40 CFR Part 112.1(b), or
(2) It is the second discharge as described in 40 CFR Part 112.1(b) occurring within any twelve-month period of more than 42 U.S. gallons of oil.

This report is to contain the following:

a) Name of the facility
b) Name(s) of the person reporting
c) Location of the facility
d) Maximum storage or handling capacity of the facility and normal daily throughput.
e) Corrective action and countermeasures you have taken, including a description of equipment repairs and replacements.
f) An adequate description of the facility including maps, flow diagrams, and topographical maps as necessary.
g) The cause of such discharge, including a failure analysis of the system in which the failure occurred.
h) Additional preventive measures you have taken or contemplated to minimize the possibility of recurrence, and
i) Such other information as the Regional Administrator may reasonably require pertinent to the plan or discharge.

SPCC PLAN AMENDMENT

40 CFR 112.5

The SPCC Plan is amended when there is a change in the facility design, construction, operation, or maintenance that materially affects its potential for a discharge. The amendment is prepared within six months following any change, and implemented immediately but not later than six months following preparation of the amendment. A review and evaluation of this SPCC Plan is also conducted at least once every five years. As a result of this review and evaluation, Vulcan Materials will amend the SPCC Plan within six months of the review to include more effective prevention and control technology if:

(1) Such technology will significantly reduce the likelihood of a spill event from the facility
(2) Such technology has been field-proven at the time of the review.

Any technical amendment to the SPCC Plan will be certified by a professional engineer in accordance with 112.3 (d). Technical amendments are those that require the application of good engineering practices and do not include change of telephone numbers, names on lists, change of ownership, and any other change not requiring engineering judgment. Completion of the review and evaluation is documented in **Table 1.0** on the following page.

The table below logs the review and evaluation of the SPCC Plan for the Gurley Quarry and documents amendments and /or P.E. Certification that has been required. Insert all previous amendment documentation and/or P.E. Certification in Appendix C, Records. Notify and send copies of all plan amendments to division environmental personnel.

Reviewer Signature	**Reviewer Name**	**Date**	**Plan Amended?**		**If technical amendment, P.E. Certified?**		**Describe amendments: (technical and/or administrative)**
			Yes	No	Yes	No	
			Yes	No	Yes	No	
			Yes	No	Yes	No	
			Yes	No	Yes	No	
			Yes	No	Yes	No	
			Yes	No	Yes	No	
			Yes	No	Yes	No	
			Yes	No	Yes	No	
			Yes	No	Yes	No	
			Yes	No	Yes	No	

Table 1.0

MANAGEMENT APPROVAL

40 CFR 112.7

This SPCC Plan establishes preparedness, prevention, planning, spill response, and spill notification procedures as set forth in applicable state and federal regulations. This plan has been compiled by an agent of and reviewed and certified by a professional engineer following the sequence specified in 40 CFR 112. Any future updates that require the plan to deviate from that sequence will include a cross reference in the plan.

As specified in 40 CFR 112.3(e), a copy of this plan will be maintained at the facility and made available upon request for on-site review by the Regional Administrator of the U.S. EPA during normal business hours.

This facility is committed to the prevention of discharges of oil to navigable waters and the environment and maintains the highest standards for spill prevention control and countermeasures through regular review, updating, and implementation of the SPCC Plan. This Plan has the full approval of management at a level of authority to commit the necessary resources to fully implement the plan.

The Plant Manager is the Designated Person Accountable for Oil Spill Prevention at the facility.

Plant Manager: Joey West

Signature _____ Date_____

GENERAL REQUIREMENTS

40 CFR 112.7

In accordance with 40 CFR 112.7(a)(1), this facility is in complete conformance to the SPCC Regulations, which became effective on August 16, 2002. In complying with all applicable requirements of the SPCC Regulations per 112.7(a)(2), no deviations from secondary containment requirements were employed or claimed in this plan. The plan may deviate from certain requirements identified in this section by providing equivalent environmental protection by some other means of spill prevention, control, or countermeasure. Where deviations occur, the reason for the nonconformance, and a detailed description of alternate methods used to achieve equivalent environmental protection will be discussed in the applicable section of this plan.

FACILITY INFORMATION

40 CFR 112.7(a)(3)

Vulcan Materials Company
Gurley Quarry
5625 Highway 72 East, Gurley, AL 35748

Contact: Plant Manager

Location of Facility

From Huntsville, AL, take I-565 E and continue east as it turns into US-72 E. Go approximately ten miles to Gurley, AL and the quarry is on the left just before entering the town of Gurley.

General Description of Facility

Vulcan Materials Company owns and operates the Gurley Quarry. The facility is a limestone quarry where stone is mined from an open pit using blasting and mobile equipment. A crushing and screening plant is used to produce various grades of crushed stone for construction. The facility location and certain features such as the plant and fuel storage are identified in **Figure 1, SPCC Facility Diagram, Appendix A**.

Topography and Surface Water Flow

Surface runoff from the petroleum storage area flows to the quarry pit. Water from the quarry pit can be pumped to Hurricane Creek. All other surface runoff flows to settling ponds which are equipped with subsurface withdrawal. Surface flow is identified on **Figure 1, SPCC Facility Diagram**.

General Description of Petroleum Storage Areas

Aboveground Storage Tanks (ASTs): ASTs are located next to the portable crushing plant in the quarry pit. A complete inventory is located on **Table 2.0** on the following page.

Crushers: There are no bulk storage tanks associated with the crushers in the plant. Any process oil tanks associated with processing equipment in the plant are situated so that a discharge of oil would collect at or near the equipment or flow to the quarry pit.

Drums: 55-gallon drums are not stored or used at this facility. All lubricant oils are stored in 5-gallon buckets when used at this facility.

Buried Piping: There is no buried piping at this facility.

Mobile Equipment: When parked, general containment is provided such that a release from any mobile equipment or truck tank would flow to the pit or settling pond and would be contained onsite. A portable generator equipped with a diesel fuel tank is situated next to and supplies power to the portable plant. A release from the diesel supply tank would flow to the quarry pit in the event of a release.

Underground Storage Tanks (USTs): There are no USTs at this facility.

STORAGE AND HANDLING CAPACITY
40 CFR 112.7 (a)(3)(i)

Container Number	Tank Status	Container Location	Contents	Total Capacity (gals)	Secondary Containment
1	Bulk	Plant	Diesel	300	Double Walled
2	Operational	Portable Genset	Diesel	1,500	Pit

Table 2.0

DISCHARGE PREVENTION MEASURES
40 CFR 112.7 (a)(3)(ii)

Discharge prevention measures at this facility include training of oil handling personnel in the operation and maintenance of equipment to prevent and contain spills and annual briefings to assure understanding of the contents of the SPCC Plan. Discharge prevention measures also include regular inspections of tanks and secondary containment, drainage controls, and measures.

DISCHARGE AND DRAINAGE CONTROLS
40 CFR 112.7 (a)(3)(iii)

Secondary containment is provided for all aboveground storage tanks at the facility. All oil storage/handling areas including the tank farm(s), fuel dispensers, fuel/oil loading and offloading areas, crusher oil tanks, mobile fuel trucks, and mobile equipment are engineered to collect a spill in the immediate area and/or to drain into settling ponds, catchment basins, oil-water separators, low catchment swales, or the quarry pit. These drainage controls are provided to prevent a release of oil to navigable waters and are described in more detail in the Containment and Diversionary Structures section of this plan.

SPILL RESPONSE AND COUNTERMEASURES
40 CFR 112.7 (a)(3)(iv)

Upon discovery of an oil spill, employees are instructed to immediately notify the plant manager or his/her designee. Any and all response equipment and manpower at the facility's disposal will be used as needed to contain the spill and prevent oil from discharging offsite or into a navigable waterway. Plant supervisory personnel will consult with environmental personnel to determine if outside spill response contractors are required. If management determines that outside resources are necessary, contacts for spill response contractors are listed on the Emergency Contact List at the front of the plan.

Any discharge will be contained and cleaned up using appropriate spill response equipment, which may include shovels, pumps, and absorbent materials. A list of **Spill Response Equipment** for this facility is located in **Appendix B**. Response equipment is stored at the petroleum containment indicated on **Figure 1, SPCC Facility Diagram**. Response equipment locations are identified to all facility personnel upon employment and during SPCC training. The supply of response equipment is replenished as needed. Additionally, aggregate fines can be used to contain and absorb spilled oil.

RECOVERY AND DISPOSAL OF MATERIAL SPILLED

40 CFR 112.7 (a)(3)(v)

Waste material generated during cleanup activities must be characterized in accordance with federal and state regulations. Environmental personnel will arrange for the clean up and/or disposal of spill residual.

EMERGENCY CONTACT LIST

40 CFR 112.7 (a)(3)(vi)

All emergency contacts including emergency contact names and phone numbers for facility personnel, environmental personnel, appropriate agencies, and oil spill response contractors are listed at the front of this plan.

SPILL REPORTING PROCEDURES

40 CFR 112.7 (a)(4)

A spill or discharge includes but is not limited to any spilling, leaking, pumping, pouring, emitting, emptying, or dumping of oil in any quantity. All reportable spill events are to be documented on the **Spill Report Form** in **Appendix B**. This information will facilitate the proper reporting of a discharge to the applicable individuals and agencies. Environmental personnel will determine if the spill meets written reporting requirements located in this Plan.

SPILL RESPONSE PROCEDURES

40 CFR 112.7 (a)(5)

Vulcan Materials Company will respond immediately to spills of oil. Our personnel are properly trained to respond to spills and only trained personnel will perform cleanup activities. Spill response contractors will be responsible for cleanup activities when Vulcan does not have the necessary training, equipment, or materials to cleanup the spill.

Vulcan's standard approach toward spill response is as follows:

(1) Assess hazards
- Assess the quantity of substance spilled and integrity of containment.
- Stop operations if necessary.
- Secure the area.
- Determine if spill could potentially impact waterways or leave the site.

(2) Stop the source of the spill. Shut down all contributing equipment and ignition sources in the area.

(3) Immediately notify the **plant manager** or his/her designee.

(4) Use all equipment and manpower at plant's disposal to minimize the amount of oil discharged and to prevent it from entering any navigable waterways. Deploy booms, damming materials and absorbents to contain the spill.

(5) Once the discharge is stopped and contained, use absorbent materials to absorb the spilled oil. The oil-soaked material must be disposed of according to federal, state, and local regulations.

(6) For spills **>5 gallons**, the plant manager or his/her designee should promptly notify environmental personnel.

(7) The plant manager and environmental personnel will determine if a spill is reportable. **In the event a spill of any quantity leaves the property and/or reaches a waterway:**
- Immediately notify environmental personnel who will make notifications to National Response Center and appropriate state and local agencies.
- If environmental personnel can't be reached, immediately notify the **National Response Center (1-800-424-8802)** and local and state agencies listed on the Emergency Contact List.
- Notify the spill response contractor (if necessary).

(8) Any response to or from the media should follow divisional procedures. Contact division human resources personnel for these procedures.

SPILL/RELEASE SCENARIOS

40 CFR 112.7 (b)

Based on how and where oil and other petroleum products are used and stored at this facility, **Table 3.0** describes potential types of spill/release scenarios, estimated volume released, the probable flow direction of the spill, and the predicted spill rate. The probable flow direction is best viewed on **Figure 1, SPCC Facility Diagram**.

Potential Failure	Spill Direction	Predicted Volume Released	Predicted Spill Rate
Complete failure of diesel, gasoline, or lube tank*	To quarry pit	Up to 1,500 gallons (Depends on tank capacity)	Instant
Leak from diesel, gasoline, or lube tank*	To quarry pit	Up to 1,500 gallons (Depends on tank capacity)	Gradual
Overfill of diesel, gasoline, or lube tank*	To quarry pit	Up to 1,500 gallons	Up to 50 gal/min
Failure of crusher oil tank	To quarry pit	Up to 300 gallons	Gradual to Instant
Hose leak at crusher oil tank	To quarry pit	Up to 300 gallons	Gradual
Tanker truck leak or failure	To pit or settling ponds	Up to 1,500 gallons	Gradual to Instant
Hose leak on mobile equipment	To pit or settling ponds	Up to 200 gallons	Gradual to Instant

*These scenarios are based on the failure of secondary containment to contain the spill.

Table 3.0

CONTAINMENT AND DIVERSIONARY STRUCTURES

40 CFR 112.7 (c)

Appropriate containment and/or diversionary structures or equipment to prevent a discharge as described in 112.1(b) has been provided for this facility. The entire containment system, including walls and floor, are capable of containing oil and are constructed so that any discharge from a primary containment system, such as a tank or pipe, will not escape the containment system before cleanup occurs. At a minimum, **one** of the following prevention systems is used at the facility:

- ☒ Dikes, berms, or retaining walls sufficiently impervious to contain oil;
- ☐ Curbing;
- ☐ Culverting, gutters, or other drainage systems;
- ☐ Weirs, booms, or other barriers;
- ☐ Spill diversion ponds;
- ☐ Retention ponds; or
- ☒ Absorbent materials

The bulk diesel storage tank is double walled design. The tank is situated in a location where a spill from fueling, offloading fuel, etc. would flow to the quarry pit for containment. All other petroleum storage containers are less than 55 gallons in capacity. Absorbent materials are stored on site for additional containment in the event of a release.

DEMONSTRATION OF PRACTICABILITY

40 CFR 112.7 (d)

Vulcan Materials Company has determined that use of containment and diversionary structures and the use of readily available spill equipment to prevent discharged oil from reaching navigable water is practicable and effective at this facility.

INSPECTIONS, TESTS, AND RECORDS

40 CFR 112.7 (e)

Inspections and integrity testing are conducted in accordance with good engineering practices and in accordance with industry standards.

INSPECTIONS

Plant personnel conduct visual inspections on a monthly basis. The following inspection procedures will be followed:

(1) Check the tank for the presence of water at the lowest possible point inside the tank.

(2) Where applicable, check the interstitial space of a double walled (secondary) tank for the presence of water and/or fuel. If applicable, check the leak detection system and replace or correct if necessary.

(3) Check all associated piping for leakage, loose joints, damage to supports, and pipe deflection.

(4) Inspect the tank shell (coating), tank supports, and foundation for structural integrity. Clean the tank and repair any deficiencies in the tank coating if necessary. If repainting, pay special attention to the coating selection, surface preparation, and coating application.

(5) Inspect all pumps, valves, hoses, and piping for cracks, leaks and abnormal wear. Check o-ring/gasket of emergency vent for damage or deterioration (at least annually).

(6) Inspect and clean (at least quarterly) normal operating vents and emergency vents.

(7) Inspect the walls and floor of the secondary containment and/or dike for cracks deterioration, excess accumulation of water and the presence of oil. Accumulations of oil will be promptly removed. Prevent standing water from being in contact with the tank and its supports.

(8) Inspect the area surrounding the containment for signs of oil spills and stained soil.

(9) Inspect the containment area drain valve to assure the integrity and utility of the valve and locking device.

Correct any deficiencies that are identified as soon as possible. If a leak is found in the tank at any time, take the tank out of service immediately (within 24 hours), and repair or replace the tank.

TESTING

This facility is deviating from the integrity testing provision of 112.8(c)(6) for all petroleum storage containers based on good engineering practice. Visual inspection on a monthly and annual basis in conjunction with additional spill control measures will provide equivalent environmental protection to physical integrity testing of all petroleum storage containers at this facility. The personnel performing these inspections are knowledgeable of storage facility operations, characteristics of the liquid stored, the type of aboveground storage tank and its associated components. Inspection procedures are covered in training provided to employees involved in oil handling at this facility. Routine inspections focus on detecting changes in conditions or signs of product leakage from the tank, piping system, and appurtenances.

Containers will be elevated in a manner that decreases corrosion potential and allows for inspection on all sides and/or containers will be placed onto a release prevention barrier such as steel or concrete. All tanks at this facility are shop-built tanks and are situated inside properly sized secondary containment designed and operated in a way that ensures that any leaks are immediately detected. For single use containers such as 55-gallon drums and totes, frequent visual inspections of the containers for signs of deterioration, discharges, or oil inside the containment area will provide equivalent environmental protection.

RECORDS

Documentation of inspections and any corrective actions taken are recorded in **Appendix C** of this plan. Records will be maintained for a minimum of three years. Comparison records for integrity testing will be maintained with inspection records in **Appendix C** for three years or longer if specified by certain industry standards.

PERSONNEL, TRAINING, AND DISCHARGE PREVENTION

40 CFR 112.7 (f)

Upon employment, **all oil handling personnel** are instructed by management in the operation and maintenance of equipment to prevent discharges; discharge procedure protocols; applicable pollution control laws, rules, and regulations; general facility operations; and, the contents of the facility SPCC Plan.

The **plant manager** is accountable for spill prevention at this facility.

Management will provide annual spill prevention briefings for all oil handling personnel to ensure adequate understanding of the SPCC Plan. These briefings highlight any past spill events or failures and recently developed precautionary measures. Training includes inspection methods, oil spill prevention, containment, and clean up methods. Spill

prevention training will be recorded on the form in **Appendix C** and maintained at the plant office for a minimum of three years.

SECURITY

40 CFR 112.7 (g)

Access to the facility is restricted to employees of Vulcan Materials Company and approved contractors. Direct access to all of the aboveground storage tanks and drums is restricted to authorized personnel. The following specific security measures are taken at this facility:

(1) This facility is deviating from the fencing requirement of 112.7(g)(1) based on good engineering practice. It is not practical to fully fence the facility due to its very large footprint. Equivalent environmental protection is provided by the presence of onsite personnel or an onsite security guard when the facility is not operating.
(2) There is no drain valve on the secondary containment since the bulk tank is of double walled design.
(3) Starter controls for pumps will be locked in the "off" position when the plant is in a non-operating status or non-standby status.
(4) All loading/unloading connections of oil pipelines or facility piping are securely capped or blank-flanged when not in service or when in standby service for an extended time.
(5) All oil storage/handling areas have lighting commensurate with this type of facility to assist in discovery of discharges occurring during hours of darkness and occurring through acts of vandalism.

LOADING/UNLOADING PROCEDURES

40 CFR 112.7 (h)

All loading and unloading of petroleum products from tanker trucks will occur in the designated fueling area at the facility. The designated fueling and offloading area is located adjacent to the tanks and is situated so as to collect leaks and/or spills in the immediate vicinity or in the pit. Additionally, spill response equipment is located at the fueling area. To prevent a discharge, warning signs, wheel chock blocks, or other devices are used to prevent premature truck departure and the lower most drain and all outlets are inspected for leaks and corrected, if necessary, prior to truck departure. Plant personnel supervise all deliveries and transfers of oil products.

FIELD CONSTRUCTED ABOVEGROUND STORAGE TANKS

40 CFR 112.7 (i)

There are no field-constructed aboveground storage tanks (ASTs) at this facility.

CONFORMANCE WITH APPLICABLE STANDARDS

40 CFR 112.7 (j)

This facility has an Alabama NPDES permit that regulates storm water and process water discharges from this site. Samples are taken monthly following the monitoring requirements specified in the permit. In addition, subsurface withdrawal is required at all discharge points to ensure that petroleum products are not discharged. The permit requires this facility to maintain and implement a SPCC Plan. There is no other State or local rules, regulations, or standards applicable to this facility.

SPECIFIC REQUIREMENTS

40 CFR 112.8

In accordance with 40 CFR 112.8 (a), this facility has met the general requirements for this SPCC Plan listed under 40 CFR 112.7 and the specific discharge prevention and containment procedures listed in 40 CFR 112.8.

FACILITY DRAINAGE

40 CFR 112.8 (b)

Any potential discharges from ASTs will be restrained by secondary containment. Where drainage is restrained from containment areas by manual, lockable valves, valves are sealed closed, except when draining the secondary containment structure. Containment areas may also be drained by pumps that are manually activated. Conditions of the accumulated material inside containment are inspected for the presence of oil prior to draining. Discharges occurring during offloading or fueling will be contained by the quarry pit. Any potential discharges from oil-filled equipment in the plant will be contained by settling ponds or the quarry pit. In the event of any uncontrolled discharge; oil will be contained at the facility and will not enter a navigable waterway. All areas collecting uncontrolled discharge are not located in areas subject to flooding.

BULK STORAGE CONTAINERS

40 CFR 112.8 (c)

An inventory of all ASTs located at this facility along with the type of secondary containment is located in **Table 2.0**. The material and construction of all ASTs at the facility are compatible with the material stored and conditions of storage such as temperature and pressure. Bulk storage containers are either self-contained by double wall design or have secondary containment systems constructed to be capable of containing oil so that any discharge from a primary tank will not escape the containment before cleanup occurs. Double walled design is utilized at this facility to prevent discharges and has been constructed to provide a secondary means of containment for the

entire capacity of the largest single container and sufficient freeboard to contain precipitation from a 25-year, 24-hour storm event..

Any visible discharge resulting in a loss of oil from the container, including but not limited to seams, gaskets, piping, pumps, valves, rivets, and bolts are promptly corrected. Any accumulations of oil in diked/contained areas will be promptly removed. Uncontaminated rainwater will not be drained or discharged from the containment area into a storm drain or an open watercourse, lake, or pond, bypassing any facility treatment system, unless the following steps are taken:

(1) Bypass valve is normally sealed closed.

(2) Rainwater is inspected for oil contamination.

(3) Bypass valve is opened and closed while draining under responsible supervision.

(4) Records of all drainage events are maintained in **Appendix C**.

Areas with a potential for discharge (such as pipes, valves, dispensers, etc.) that are not in containment or do not have a dike system are engineered to collect a spill in the immediate area or to drain to a settling pond or the quarry pit. All effluent treatment systems such as oil-water separators are observed frequently enough to detect possible system upsets that could cause a discharge.

As defined in 40 CFR 112.2, oil filled electrical equipment, operating, or manufacturing equipment are not bulk storage containers. In the event of a discharge from facility-owned electrical transformers containing greater than 55 gallons of oil and crusher oil tanks, containment is provided by facility drainage as described above. This facility operates using a diesel powered generator. The diesel supply tank associated with the genset is situated so that a spill from would collect in the immediate vicinity or the quarry pit.

There are no completely buried, partially buried, or bunkered storage tanks at this facility.

No ASTs at this facility utilize internal heating coils.

Each aboveground container will be inspected monthly and tested for integrity on a regular schedule and whenever material repairs are made as described in Inspections, Tests, and Records (40 CFR 112.7 (e)) in the General Requirements section of this Plan.

Each bulk storage container installation is engineered or updated in accordance with good engineering practice to avoid discharge. At least **one** of the following devices is provided on each container:

- ☐ High liquid level alarms with an audible or visual signal at a constantly attended operation or surveillance station. In smaller facilities, an audible air vent may suffice.

- ☐ High liquid level pump cutoff devices set to stop flow at predetermined container content level.

- ☐ Direct audible or code signal communication between the container gauger and the pumping station.

- ☒ A fast response system for determining the liquid level of each bulk storage container such as digital computers, telepulse, or direct vision gauges. If this alternative is used, a person will be present to monitor gauges and the overall filling of containers.

Liquid level sensing devices are regularly tested to ensure proper operation.

All storage tanks are equipped with direct vision gauges, which are monitored during filling of containers.

Mobile and/or portable oil storage containers are positioned or located to contain oil at the facility and to prevent a discharge to navigable waters. A secondary means of containment is sufficient to contain the capacity of the largest single compartment or container with sufficient freeboard to contain precipitation. When not in use, fuel trucks and mobile equipment are located in an area engineered to drain toward settling ponds or berms.

FACILITY TRANSFER OPERATIONS

40 CFR 112.8 (d)

Transfer operations at this facility include:

- Mobile equipment fueling.
- Offloading of diesel and bulk oils at the shop.
- Transfer of used oil from the bulk storage tank to a vendor truck.

There is no buried piping at this facility. Buried piping installed or replaced after August 16, 2002 will be provided with a protective wrapping and coating and will be cathodically protected. Additionally, integrity and leak testing will be conducted at the time of installation, modification, construction, relocation, or replacement.

When piping is not in service, the terminal connection at the transfer point is capped or blank-flanged. Pipe supports are properly designed to minimize abrasion and corrosion and allow for expansion and contraction. Aboveground valves, piping, and appurtenances will be inspected as outlined in Inspections, Tests, and Records (40 CFR 112.7 (e)). All vehicles entering the facility will be warned of accessible aboveground piping to ensure that no vehicle will endanger piping or other oil transfer operations.

Certification of the Applicability of the Substantial Harm Criteria
40CFR 112.20(e)

Facility Name: Vulcan Materials Company – Gurley Quarry
Facility Address: 5937 Highway 72 East, Gurley, AL 35748

1. Does the facility transfer oil over water to or from vessels and does the facility have a total oil storage capacity greater than or equal to 42,000 gallons?

   YES ☐ NO ☒

2. Does the facility have a total oil storage capacity greater than or equal to 1 million gallons and does the facility lack secondary containment that is sufficiently large to contain the capacity of the largest above ground oil storage tank plus sufficient freeboard to allow for precipitation within any above ground storage tank area?

   YES ☐ NO ☒

3. Does the facility have a total oil storage capacity greater than or equal to 1 million gallons and is the facility located at a distance (as calculated using the appropriate formula in Attachment C-III to this appendix or a comparable formula) such that a discharge from the facility could cause injury to fish and wildlife and sensitive environments? For further description of fish and wildlife and sensitive environments see Appendices I, II, and III to DOC/NOAA's "Guidance for Facility and Vessel Response Plans: Fish and Wildlife and Sensitive Environments" (see appendix E to this part, section 10, for availability) and the applicable Area Contingency Plan.

   YES ☐ NO ☒

4. Does the facility have a total oil storage capacity of greater than or equal to 1 million gallons and is the facility located at a distance (as calculated using the appropriate formula in Attachment C-III to this appendix or a comparable formula) such that a discharge from the facility would shut down a public drinking water intake?

   YES ☐ NO ☒

5. Does the facility have a total oil storage capacity of greater than or equal to 1 million gallons and has the facility experienced a reportable spill in an amount greater than or equal to 10,000 gallons within the last 5 years?

   YES ☐ NO ☒

Certification

I certify under penalty of law that I have personally examined and am familiar with the information submitted in this document, and that based on my inquiry of those individuals responsible for obtaining this information, I believe that the submitted information is true, accurate, and complete.

Signature _____

Name (type or print) _____

Title Plant Manager

APPENDICES

APPENDIX A –FIGURES

APPENDIX B –SPILL RESPONSE INFORMATION

APPENDIX C – RECORDS

APPENDIX A

FIGURES

Figure 1

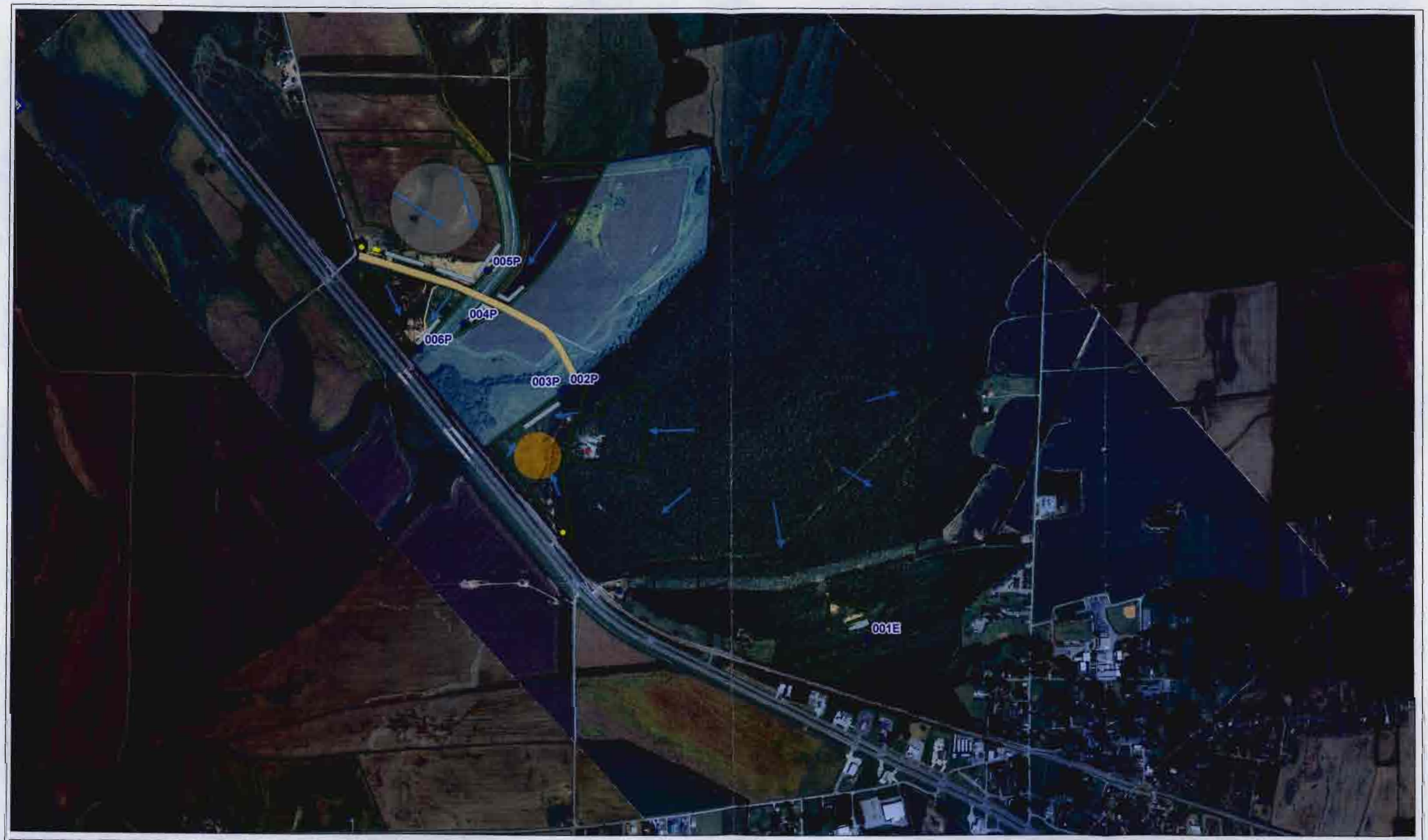

0 500 1,000 Feet

Photo Date: 09/14/2012
Print Date: 08/14/2013

Permit Signs
Outfalls
Flow Direction
Office and Scales
Easement
Ponds
Plant
Stockpiles
Lease Exclusion Area
Disturbed Area
VMC Property
Containment

Vulcan Construction Materials, LP
Gurley Quarry
Madison County, AL

APPENDIX B

SPILL RESPONSE INFORMATION

SPILL RESPONSE EQUIPMENT LIST

Equipment	Quantity	Location
Absorbent Pads	Stock for Routine Use	Office
Granular Absorbent Material	Stock for Routine Use	Office
Stone Fines	As Needed	Stockpiles
Emergency Only" Spill Kit 30 Oil Only, Absorbent Pads; 2 – Folded Absorbent Booms; 3 Disposable Bags and Ties; 65-gallon Labeled, Salvage Drum	One (1) Kit Minimum	Petroleum Containment

SPILL REPORT FORM

Facility Name and Location: Gurley Quarry, 5625 Highway 72 East, Gurley, AL 35748

Owner of Facility: Vulcan Materials Company

Date of discharge: _____ **Time of discharge:** _____

Material discharged: _____

Estimated quantity discharged: _____

Source of discharge: _____

Describe the cause of the discharge: _____
_____
_____

Describe the affected media: _____

Describe damages or injuries resulting from the discharge: _____
_____
_____

Describe corrective action taken as a result of the discharge: _____
_____
_____

Is evacuation necessary? Yes / No (Circle One)

List all individuals and/or agencies contacted (include name, number, time): _____
_____
_____
_____
_____

Release reported by: _____
Report prepared by: _____ **Report preparation date:** _____

*Attach diagrams, maps, and other information, as needed, to document the incident.
**Retain a copy of this form in Appendix C of the SPCC Plan for a minimum of three years.

APPENDIX C

RECORDS

SPCC TRAINING LOG

Training Conducted By:_____ Date: _____

Material Covered: _____

_____

_____

Attendee Name / Position	Attendee Signature	Date

*Retain a copy of this log in Appendix C of the SPCC Plan for a minimum of three years.

Attendee Name / Position	Attendee Signature	Date

*Retain a copy of this form in Appendix C of the SPCC Plan for a minimum of three years.

SPCC DRAINAGE LOG

Date	Containment Identification	Operator	Condition of Water*	Amount Drained (Inches)

* If accumulation of oil present, describe corrective action prior to drainage of water.
* Retain a copy of this log in Appendix C of the SPCC Plan for a minimum of three years.

SPCC MONTHLY INSPECTION CHECKLIST

Inspection Date: _____ Facility Name: _____

Inspector Name: _____

Item	Status	Comments and Corrective Action
Water in primary tank, secondary containment, interstitial space of double walled tanks?	☐ YES* ☐ NO	
Evidence of poor housekeeping, debris or fire hazard in secondary containment?	☐ YES* ☐ NO	
Drain valves operable, closed and locked?	☐ YES ☐ NO*	
Visible signs of leakage or spillage around the tank system, concrete pad, secondary containment or ground?	☐ YES* ☐ NO	
Containment pathways clear?	☐ YES ☐ NO*	
Cracks or deterioration of secondary containment?	☐ YES* ☐ NO	
Ladder and platform structures secure with no sign of severe corrosion or damage?	☐ YES ☐ NO*	
Tank liquid level gauge readable and operable?	☐ YES ☐ NO*	
Check all tank openings and ports are properly sealed?	☐ YES ☐ NO*	
Tank vents operable and free from obstruction?	☐ YES ☐ NO*	
Drums are free of damage and leakage and are located inside secondary containment?	☐ YES ☐ NO*	
Additional Comments (Use opposite side if necessary)		

*** Designates an item in a non-conformance status. Corrective action is required. Document in the space provided above.**
Retain a copy of this log in Appendix C of the SPCC Plan for a minimum of three years.

SPCC ANNUAL INSPECTION CHECKLIST

Inspection Date: _____ Facility Name: _____
Inspector Name: _____

Inspection Guidance:

- For equipment not included in this standard, follow the manufacturer recommended inspection/testing schedules and procedures.
- The periodic AST Inspection is intended for monitoring the external AST condition and its containment structure. This visual inspection does not require a certified inspector. It shall be performed by an owner's inspector who is familiar with the site and can identify changes and developing problems.
- Inspect the AST shell and associated piping, valves, and pumps including inspection of the coating for Paint Failure.
- Inspect:
  1. Earthen containment structures including examination for holes, washout, and cracking in addition to liner degradation and tank settling.
  2. Concrete containment structures and tank foundations/supports including examination for holes, washout, settling, paint failure, in addition to examination for corrosion and leakage.
  3. Steel containment structures and tank foundations/supports including examination for washout, settling, cracking, and for paint failure, in addition to examination for corrosion and leakage.
- Inspection of cathodic protection system, if applicable, includes the wire connections for galvanic systems and visual inspection of the operational components (power switch, meters, and alarms) of impressed current systems.
- Remove promptly upon discovery standing water or liquid in the primary tank, secondary containment area, interstice, or spill container. Before discharge to the environment, inspect the liquid for regulated products or other contaminants and disposed of it properly.
- In order to comply with EPA SPCC (Spill Prevention, Control and Countermeasure) rules, a facility must regularly test liquid level sensing devices to ensure proper operation (40 CFR 112.8(8)(v)).
- (*) designates an item in a non-conformance status. This indicates that action is required to address a problem.
- Non-conforming items important to tank or containment integrity require evaluation by an engineer experienced in AST design, a certified inspector, or a tank manufacturer who will determine the corrective action. Note the non-conformance and corresponding corrective action in the comment section.
- Retain the completed checklists for 36 months.
- Complete this checklist on an annual basis supplemental to the owner monthly-performed inspection checklists.
- Note: If a change has occurred to the tank system or containment that may affect the SPCC plan, the condition should be evaluated against the current plan requirement by a Professional Engineer knowledgeable in SPCC development and implementation.

Item	Status	Comments
Containment structure in satisfactory condition?	☐ YES ☐ NO*	
Drainage pipes/valves fit for continued service	☐ YES ☐ NO*	
Evidence of tank settlement or foundation washout?	☐ YES* ☐ NO	
Cracking of concrete pad or ring wall?	☐ YES* ☐ NO	
Tank supports in satisfactory condition?	☐ YES ☐ NO*	
Water able to drain away from tank?	☐ YES ☐ NO*	
Grounding strap secured and in good condition?	☐ YES ☐ NO*	
Cathodic protection system functional?	☐ YES ☐ NO*	
Evidence of paint failure on tank?	☐ YES* ☐ NO	
Noticeable shell/head distortions, buckling, denting or bulging?	☐ YES* ☐ NO	
Evidence of shell/head corrosion or cracking?	☐ YES* ☐ NO	
Flanged connection bolts tight and fully engaged with no sign of wear or corrosion?	☐ YES ☐ NO*	
Standing water on tank roof?	☐ YES* ☐ NO	
Holes in roof?	☐ YES* ☐ NO	
Vents free of obstructions?	☐ YES ☐ NO*	
Emergency vent operable? Will lift as required?	☐ YES ☐ NO*	

Has the tank liquid level sensing device been tested to ensure proper operation?	☐ YES ☐ NO*	
Does the tank liquid level sensing device operate as required?	☐ YES ☐ NO*	
Are overfill prevention devices in proper working condition?	☐ YES ☐ NO*	
Are tank grounding lines in good condition?	☐ YES ☐ NO*	
Is electrical wiring for control boxes/lights in good condition?	☐ YES ☐ NO*	
Additional Comments (Use opposite side if necessary)		

*** Designates an item in a non-conformance status. Corrective action is required. Document in the space provided above.**
Retain a copy of this log in Appendix C of the SPCC Plan for a minimum of three years

POLLUTION ABATEMENT
AND/OR
PREVENTION PLAN

VULCAN CONSTRUCTION MATERIALS, LP
GURLEY QUARRY
GURLEY, ALABAMA
MADISON COUNTY

August 2013

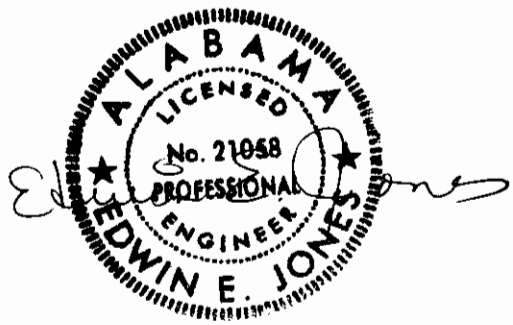

Engineer's Stamp

I. INTRODUCTION:

This Pollution Abatement/Prevention (PAP) plan is a required part of the application for a NPDES Permit. The Gurley Quarry of Vulcan Construction Materials, LP is located in Madison County at Township 4S, Range 2E, Sections 2, 3, 10 and 11 in the Moontown Quadrangle as shown on the attached USGS map (**Attachment 1**). This application is being prepared in accordance with the rules and regulations of the Alabama Department of Environmental Management (ADEM). A thorough field review of the site has been conducted prior to the compilation and submittal of this plan. The geology of the site has been evaluated to determine the suitability for mining and to calculate runoff coefficients.

The PAP plan is presented in two parts, which includes a narrative description of the operation and treatment requirements, drainage maps and discharge calculations. The narrative description is intended to address the format as outlined by the ADEM Administrative Code R. 335-6-9. as well as present the basis for the designs as further detailed in the PAP. Drawings as presented in the PAP were derived from the rules and regulations of the ADEM Administrative Code R. 335-6-9, Appendix A and Appendix B, as well as from other generally accepted design data sources.

II. OPERATOR:

The operator of this facility is Vulcan Construction Materials, LP. The plant is physically located at 5625 Highway 72 East, Gurley, Alabama 35748. Specific inquiries concerning the facility should be directed to:

Vulcan Construction Materials, LP
Attn: Joey West
P. O. Box 17559
Huntsville, AL 35810
Telephone: (256) 852-0411

All other correspondence should be addressed to:

Vulcan Construction Materials, LP
Attn.: Joe Howle
P.O. Box 385016
Birmingham, AL 35238-5016
Telephone: (205) 298-3230

III. GENERAL INFORMATION:

This facility will employ 8 people on a full-time basis. The facility will produce sized limestone aggregate and will typically be a daytime operation, conducting business between 6:00 a.m. and 4:00 p.m. Water for dust control and plant operations will come from the quarry pit with makeup water supplied by Hurricane Creek. Point source 001E discharges storm water into an unnamed tributary of Sand Branch. Proposed point source 002P will discharge water pumped from the quarry pit to Hurricane Creek. Proposed outfall 003P will discharge storm water runoff to Hurricane Creek. Proposed outfalls 004P, 005P, and 006P will discharge storm water to an unnamed tributary of Hurricane Creek. Berms, vegetation, the quarry pit and settling ponds handle surface runoff from the site.

IV. TOPOGRAPHIC MAP:

Attachment 1 contains a 7.5 minute series USGS topographic map of the site extending to at least one mile beyond the property boundaries. **Attachment 2** contains a detailed site map indicating site drainage, location of onsite facilities, quarry pit, settling ponds, discharge points, and other features.

V. METHOD OF DIVERTING SURFACE WATER RUNOFF:

See item III above.

VI. RAW MATERIALS, PROCESSES AND PRODUCTS:

Limestone will be the only mineral mined at this facility. The product sizes are listed below. The mined product is crushed, screened, washed (water only) and stockpiled for sale. The products are construction and road grade aggregate including, ALDOT 57, ALDOT 67, ALDOT 78, base material, ALDOT 810, ALDOT 89, and Rip Rap.

Pond fines and plant waste generated at the site will be dried, reprocessed and sold as ag-lime. Stripping material will be used for site development such as road and berm construction and, long-term, will be backfilled into the quarry pit.

VII. SCHEMATIC DIAGRAM

A schematic diagram showing each source that creates runoff water and the storm water collection system has been provided as part of this PAP plan in **Attachment 3**.

VIII. POST TREATMENT QUANTITY AND QUALITY OF EFFLUENT:

Runoff calculations have been provided as part of this plan. The treatment ponds have been designed to allow adequate settling time for the expected particle sizes to reduce suspended solids concentrations to meet effluent limits. Since the previous permit issuance, there has been no measurable discharge from point source 001E. All other outfalls are proposed. Historical data from a similar Vulcan site in the region (Fort Payne Quarry) is reported below. Flow rates will be dependent on the storm event at hand.

Average Values Taken from Similar Vulcan Site (Actual Data)

Point Sources	pH (s.u.)	TSS (mg/L)	Flow (mgd)
001E, 002P, 003P, 004P, 005P, 006P	7.62	7.91	0.0044

RECEIVED
OCT - 8 2013

IX. WASTE TREATMENT FACILITIES:

The primary method of treatment for the removal of suspended solids is settling. All settling ponds will, at a minimum, provide 0.25 acre-feet of storage for every acre of disturbed land draining to the system. All trees, brush, boulders and other objects that would impair compaction have been removed from the area prior to construction. The settling ponds will be excavated below the surrounding ground surface.

There is one (1) existing and five (5) proposed discharge points for this site. Outfall **001E** discharges from one settling pond that captures storm water from a 2.1-acre disturbed area, which is part of a 30-acre drainage area. Proposed outfall **002P** will discharge water pumped to dewater the quarry pit. The entire lower floor of the quarry pit will serve as a settling pond for storm water and ground water accumulation. Approximately 14.9 proposed disturbed acres and an additional 19.2 drainage acres, for a total of 34.1 drainage acres, flow to the quarry pit. Proposed outfall **003P** will discharge from one settling pond that will capture storm water runoff from the 19.7-acre plant area. Proposed outfall **004P** will discharge from two settling ponds that will capture storm water runoff from 26.2 disturbed acres. Proposed outfall **005P** will discharge from three settling ponds that will capture storm water runoff from a 53-acre disturbed area as well as overflow from the wheel wash. Proposed outfall **006P** will discharge from one settling pond that will captures storm water runoff from a 14-acre disturbed area. Pond diagrams are located in **Attachment 4**.

Make-up water will be supplied to the plant for the wash screen and dust suppression from the quarry pit. All process water will be recirculated in a closed loop system. In the event of an upset condition, overflow from the system will be captured by the settling pond associated with outfall 003P. However, discharge from the closed-loop system is not anticipated. The settling pond associated with 003P can also be used to provide make-up water to the plant. Water in the quarry pit and settling pond at outfall 003P will be conserved to the greatest extent possible.

All spill pipes are sized to carry the peak flow from a 25-year, 24-hour storm event, and will be constructed of material that will not chemically react with the effluent. All discharge pipes will be equipped with a means of subsurface withdrawal. A splash pad constructed of rip rap is installed at each discharge point to prevent erosion. The spill pipe is of sufficient size and the ponds are constructed with sufficient freeboard, so as to not warrant installation of a separate emergency spillway.

Settling pond systems are to be maintained until mining has ceased and permission from ADEM has been granted to remove the system. Accumulated sediments in the settling pond systems will be removed whenever a pond has lost 60% of its liquid storage capacity due to sedimentation. Solids removed from the settling pond system will be placed in a controlled area for dewatering prior to moving and hauling.

X. SEDIMENT CONTROL FOR HAUL ROADS:

The plant and haul roads are constructed such that sediments are directed to the settling pond system or onsite Best Management Practices (BMPs). An easement will extend across the property, connecting two non-contiguous areas. This easement will span Hurricane Creek via bridge. Vulcan will re-install a bridge at a location where a county bridge once existed (see **Attachment 5**).

XI. LOCATION OF ALL STREAMS ADJACENT TO THE MINING AREA:

The topographic map submitted as part of this plan shows all water bodies. The mining operation will provide a 50-foot buffer zone around streams where practical. If a buffer zone cannot be maintained ADEM will be contacted regarding construction of a designed berm to protect the stream. Both Hurricane Creek and a tributary of Hurricane Creek are located on property that is excluded from Vulcan's lease and will not be impacted by our operations.

XII. NON-POINT SOURCE POLLUTION:

All disturbed areas will be graded such that drainage will carry sediment to the grassed berms, ditches, onsite BMPs, the quarry pit or the settling pond. Non-point sources of pollution should not result from this facility.

XIII. PUBLIC WATER SUPPLY IMPOUNDMENT:

This facility will not discharge to a stream segment classified as a Public Water Supply.

XIV. SPILL PREVENTION, CONTROL AND COUNTERMEASURES PLAN

A detailed plan for onsite storage of petroleum products is attached.

XV. RUNOFF CALCULATIONS

Design Flow Rate (Rational Method Q=CIA)

Q=cfs	C=Runoff Coefficient	I=Rainfall Intensity in/hr (25-yr)	A=Area (acres)

001E	(0.50)(0.2750)(2.1)=0.289 cfs
002P	(0.50)(0.2750)(34.1)=4.689 cfs
003P	(0.50)(0.2750)(19.7)=2.709 cfs
004P	(0.50)(0.2750)(26.2)=3.603 cfs
005P	(0.50)(0.2750)(53)=7.288 cfs + 0.067 cfs (wheel wash pump)
006P	(0.50)(0.2750)(14)=1.925 cfs

XVI. RECLAMATION PROCEDURE

This site is currently exempt from the Alabama Surface Mining Act and its requirements as regulated by the Alabama Department of Industrial Relations (DIR). However, when operation of this facility has ceased, measures to protect water quality will be implemented as outlined in Part I, B, 1(b) of our water permit.

XVII. BMP TYPICALS

BMP typcials are included in **Attachment 6**.

OCT - 8 2013
MANAGEMENT BRANCH

XVIII. GENERAL PIT OPERATION:

The operations at this facility include limestone drilling, blasting, hauling, crushing, screening, conveying, stockpiling, loading and shipping by customer truck.

VULCAN CONSTRUCTION MATERIALS, LP
SOUTHERN AND GULF COAST DIVISION
GURLEY QUARRY

Detention Pond Calculations

Point Source 001E

Total Disturbed Acres = 2.1 acres (A)
Runoff Coefficient = 0.50 (C)
Rainfall for a 25-year storm event: 6.6 in./24-hours = 0.2750 in./hr. (I)
Time of concentration is assumed to be 1-hour.

Design Flow Rate (cfs):

Q=CIA
Q=(0.50)(0.2750)(2.1)
Q= **0.289 cfs**

Detention Pond:

- Design for 1-hour storage of design runoff
- Volume=(0.289 cfs)(60 min/hr)(60 sec/min)
  Volume=**1040 ft^3**
- Alternate Volume: 0.25 acre feet/acre x 2.1 acres = **22,869 ft^3** (Governs)

Pond #	Width	Length	Depth	Available Volume
1	225'	200'	10'	450,000 ft^3

- Total Volume Available= **450,000 ft^3 > 22,869 ft^3**

The outlet pipe is sized to handle flow from the total 30 acres of drainage (including the 2.1 acres that are disturbed).

Total Drainage Acres = 30 acres (A)
Runoff Coefficient = 0.30 (C)
Rainfall for a 25-year storm event: 6.6 in./24-hours = 0.2750 in./hr. (I)
Time of concentration is assumed to be 1-hour.

Design Flow Rate (cfs):

Q=CIA
Q=(0.30)(0.2750)(30)
Q= **2.475 cfs**

Outlet Pipe (Emergency Overflow):

- Flow rate = 2.475 cfs
- Using open channel flow equations: $Q=(1.49)(AR^{2/3})(S^{1/2}/n)$
  n=0.029
  S=0.02
- Solving equation yields a **14" diameter corrugated pipe** will handle in excess of 2.475 cfs.

VULCAN CONSTRUCTION MATERIALS, LP
SOUTHERN AND GULF COAST DIVISION
GURLEY QUARRY

Quarry Sump Calculations

Point Source 002P

Total Disturbed Acres = 14.9 acres (A)
Total Drainage Acres = 14.9 + 19.2 = 34.1 acres
Runoff Coefficient = 0.50 (C)
Rainfall for a 25-year storm event: 6.6 in./24-hours = 0.2750 in./hr. (I)
Time of concentration is assumed to be 1-hour.

Design Flow Rate (cfs):

Q=CIA
Q=(0.50)(0.2750)(34.1)
Q= **4.689 cfs**

Detention Pond:

- Design for 1-hour storage of design runoff
- Volume=(4.689 cfs)(60 min/hr)(60 sec/min)
  Volume=**16,880.4 ft^3**
- Alternate Volume: 0.25 acre feet/acre x 34.1 acres = **371,349 ft^3** (Governs)

Quarry pit	Acres	Depth	Available Volume
	4.5 acres (196,020 ft^2)	10'	1,960,200 ft^3

- Total Volume Available= **1,960,000 ft^3 > 371,349 ft^3**

Since this is a pumped discharge point and cannot discharge otherwise, it is not necessary to design the outlet pipe to handle emergency overflow.

VULCAN CONSTRUCTION MATERIALS, LP
SOUTHERN AND GULF COAST DIVISION
GURLEY QUARRY

Detention Pond Calculations

Point Source 003P

Total Disturbed Acres = 19.7 acres (A)
Runoff Coefficient = 0.50 (C)
Rainfall for a 25-year storm event: 6.6 in./24-hours = 0.2750 in./hr. (I)
Time of concentration is assumed to be 1-hour.

Design Flow Rate (cfs):

Q=CIA
Q=(0.50)(0.2750)(19.7)
Q= **2.709 cfs**

Detention Pond:

- Design for 1-hour storage of design runoff
- Volume=(2.709 cfs)(60 min/hr)(60 sec/min)
  Volume=**9,752.4 ft^3**
- Alternate Volume: 0.25 acre feet/acre x 19.7 acres = **214,533 ft^3** (Governs)

Pond #	Width	Length	Depth	Available Volume
1	50'	540'	8'	216,000 ft^3

- Total Volume Available= **216,000 ft^3 > 214,533 ft^3**

The outlet pipe is sized to handle flow from 19.7 drainage (disturbed) acres.

Outlet Pipe (Emergency Overflow):

- Flow rate = 2.709 cfs
- Using open channel flow equations: $Q=(1.49)(AR^{2/3})(S^{1/2}/n)$
  n=0.029
  S=0.02
- Solving equation yields a **15" diameter corrugated pipe** will handle in excess of 2.709 cfs.
- **A 24" pipe will be installed at this outfall.**

VULCAN CONSTRUCTION MATERIALS, LP
SOUTHERN AND GULF COAST DIVISION
GURLEY QUARRY

Detention Pond Calculations

Point Source 004P

Total Disturbed Acres = 26.2 acres (A)
Runoff Coefficient = 0.50 (C)
Rainfall for a 25-year storm event: 6.6 in./24-hours = 0.2750 in./hr. (I)
Time of concentration is assumed to be 1-hour.

Design Flow Rate (cfs):

Q=CIA
Q=(0.50)(0.2750)(26.2)
Q= **3.603 cfs**

Detention Pond:

- Design for 1-hour storage of design runoff
- Volume=(3.603 cfs)(60 min/hr)(60 sec/min)
  Volume=**13,068 ft^3**
- Alternate Volume: 0.25 acre feet/acre x 26.2 acres = **285,318 ft^3** (Governs)

Pond #	Width	Length	Depth	Available Volume
1	50'	440'	8'	176,000 ft^3
2	50'	275'	8'	110,000 ft^3

- Total Volume Available= **286,000 ft^3 > 285,318 ft^3**

The outlet pipe is sized to handle flow from 26.2 drainage (disturbed) acres.

Outlet Pipe (Emergency Overflow):

- Flow rate = 3.603 cfs
- Using open channel flow equations: $Q=(1.49)(AR^{2/3})(S^{1/2}/n)$
  n=0.029
  S=0.02
- Solving equation yields a **15" diameter corrugated pipe** will handle in excess of 3.603 cfs.
- **An 18" pipe will be installed at this outfall.**

VULCAN CONSTRUCTION MATERIALS, LP
SOUTHERN AND GULF COAST DIVISION
GURLEY QUARRY

Detention Pond Calculations

Point Source 005P

Total Disturbed Acres = 53 acres (A)
Runoff Coefficient = 0.50 (C)
Rainfall for a 25-year storm event: 6.6 in./24-hours = 0.2750 in./hr. (I)
Time of concentration is assumed to be 1-hour.

Design Flow Rate (cfs):

Q=CIA
Q=(0.50)(0.2750)(53)
Q= **7.288 cfs + 0.067 cfs (wheel wash) = 7.355 cfs**

Detention Pond:

- Design for 1-hour storage of design runoff
- Volume=(7.355 cfs)(60 min/hr)(60 sec/min)
  Volume=**26,478.8 ft^3**
- Alternate Volume: 0.25 acre feet/acre x 53 acres = **577,170 ft^3** (Governs)

Pond #	Width	Length	Depth	Available Volume
1	50'	485'	8'	194,000 ft^3
2	50'	485'	8'	194,000 ft^3
3	50'	485'	8'	194,000 ft^3

- Total Volume Available= **582,000 ft^3 > 577,170 ft^3**

The outlet pipe is sized to handle flow from 53 drainage (disturbed) acres.

Outlet Pipe (Emergency Overflow):

- Flow rate = 7.355 cfs
- Using open channel flow equations: $Q=(1.49)(AR^{2/3})(S^{1/2}/n)$
  n=0.029
  S=0.02
- Solving equation yields a **21" diameter corrugated pipe** will handle in excess of 7.355 cfs.
- **Three (3) 24" pipes will be installed at this outfall.**

RECEIVED
OCT - 8 2013
STORMWATER
ENGINEERING BRANCH

VULCAN CONSTRUCTION MATERIALS, LP
SOUTHERN AND GULF COAST DIVISION
GURLEY QUARRY

Detention Pond Calculations

Point Source 006P

Total Disturbed Acres = 14 acres (A)
Runoff Coefficient = 0.50 (C)
Rainfall for a 25-year storm event: 6.6 in./24-hours = 0.2750 in./hr. (I)
Time of concentration is assumed to be 1-hour.

Design Flow Rate (cfs):

Q=CIA
Q=(0.50)(0.2750)(14)
Q= **1.925 cfs**

Detention Pond:

- Design for 1-hour storage of design runoff
- Volume=(1.925 cfs)(60 min/hr)(60 sec/min)
  Volume=**6,930 ft^3**
- Alternate Volume: 0.25 acre feet/acre x 14 acres = **152,460 ft^3** (Governs)

Pond #	Width	Length	Depth	Available Volume
1	50'	400'	8'	160,000 ft^3

- Total Volume Available= **160,000 ft^3 > 152,460 ft^3**

The outlet pipe is sized to handle flow from 14 drainage (disturbed) acres.

Outlet Pipe (Emergency Overflow):

- Flow rate = 1.925 cfs
- Using open channel flow equations: $Q=(1.49)(AR^{2/3})(S^{1/2}/n)$
  n=0.029
  S=0.02
- Solving equation yields a **12" diameter corrugated pipe** will handle in excess of 1.925 cfs.
- **An 18" pipe will be installed at this outfall.**

ATTACHMENT #1
(EXHIBIT A)

USGS MAP

ATTACHMENT #2
(EXHIBIT B)

SITE MAP

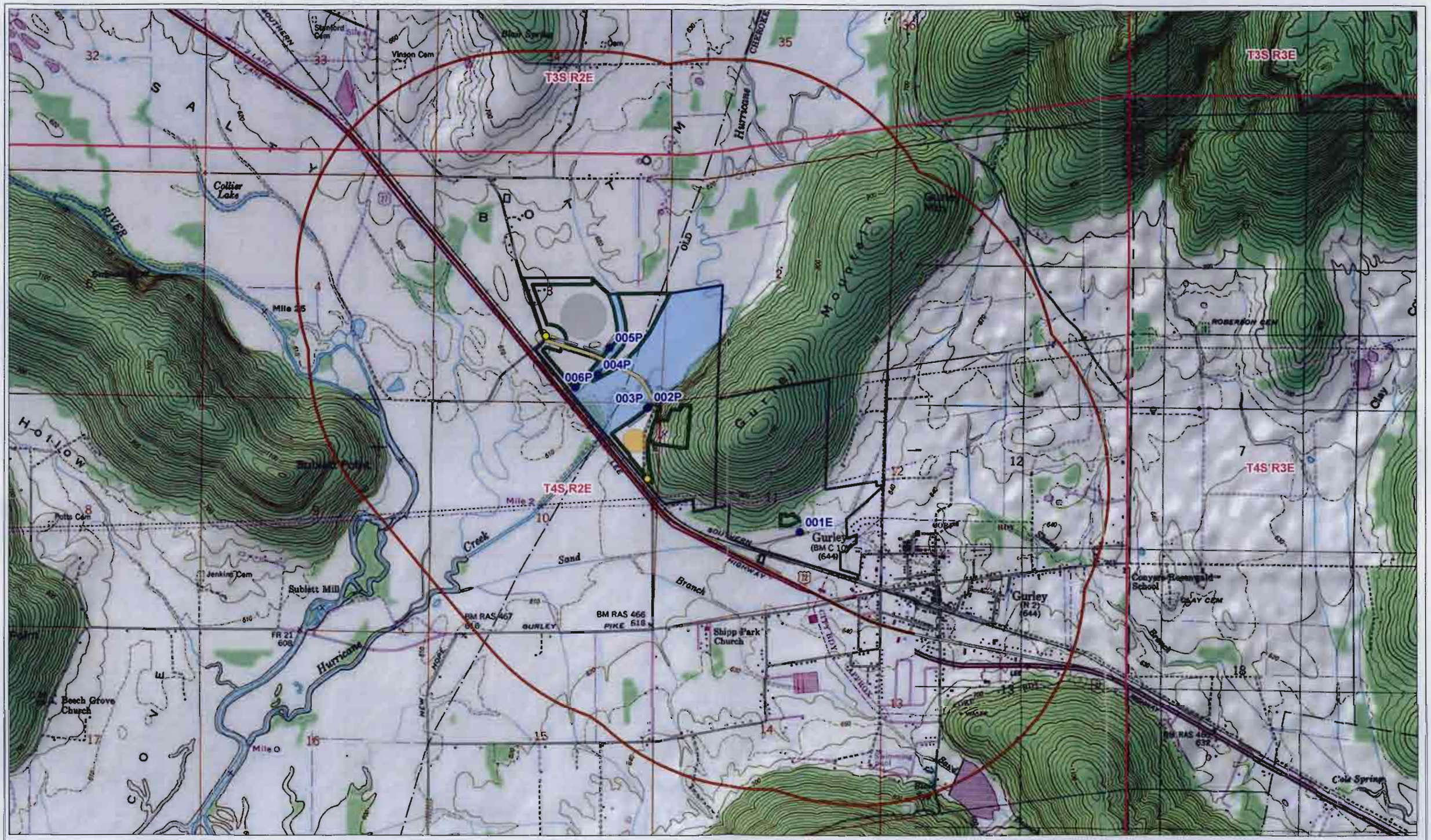

0 1,000 2,000 Feet

Photo Date: NA

Print Date: 08/14/2013

Permit Signs
Outfalls
Office and Scales
Easement
Ponds
1 Mile Buffer
Plant
Stockpiles
Lease Exclusion Area
Disturbed Area
VMC Property
Containment

Vulcan Construction Materials, LP
Gurley Quarry
Madison County, AL

ATTACHMENT #3

WATER FLOW SCHEMATIC DIAGRAM

VULCAN CONSTRUCTION MATERIALS, LP
SOUTHERN AND GULF COAST DIVISION
GURLEY QUARRY
FLOW SCHEMATIC DIAGRAM

Outfall 001E

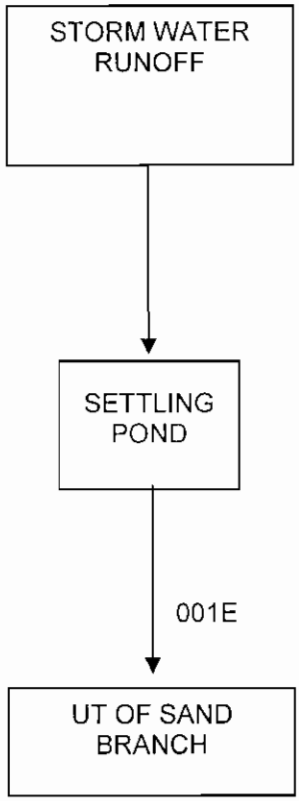

VULCAN CONSTRUCTION MATERIALS, LP
SOUTHERN AND GULF COAST DIVISION
GURLEY QUARRY
FLOW SCHEMATIC DIAGRAM

Outfall 002P & 003P

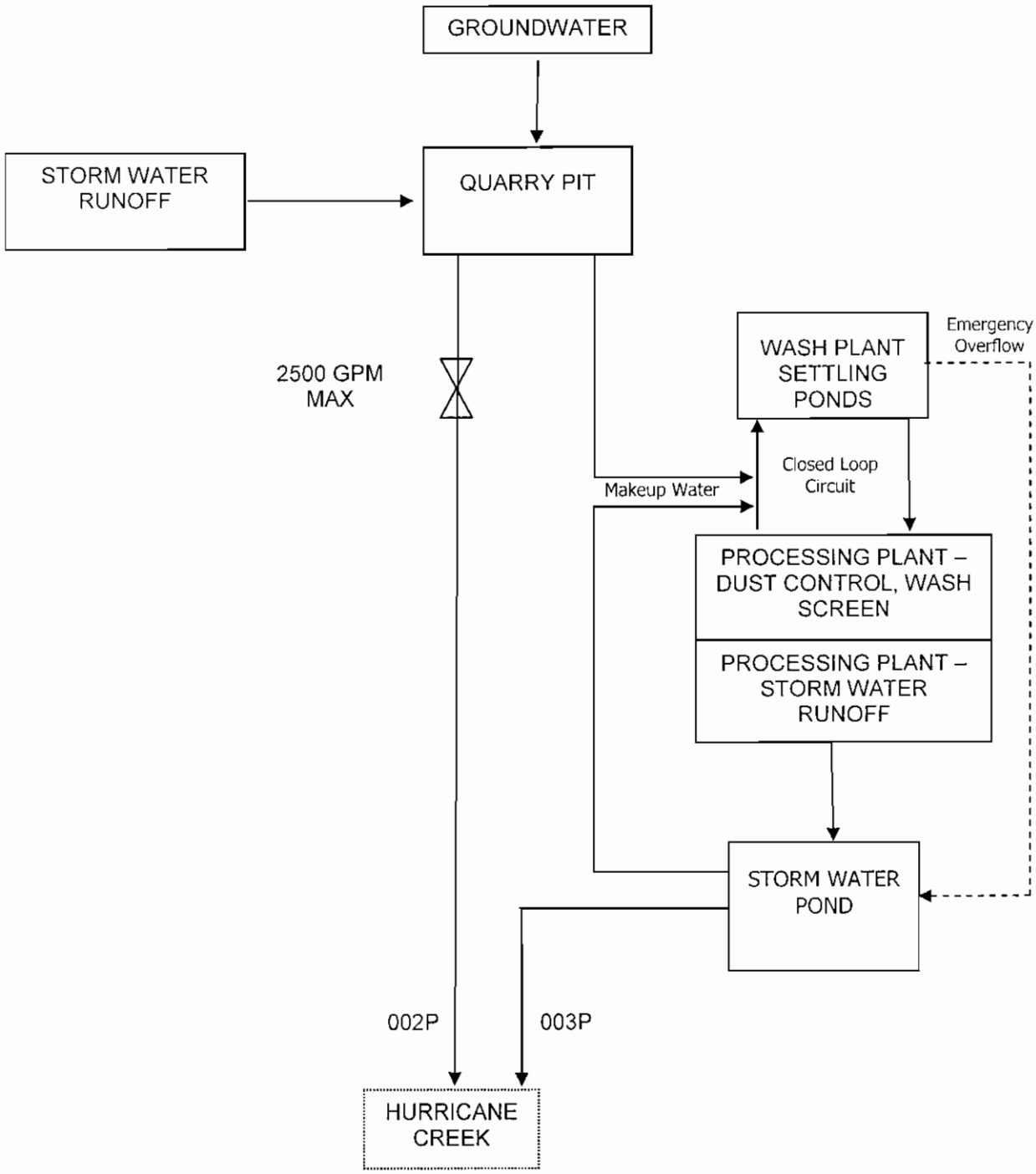

VULCAN CONSTRUCTION MATERIALS, LP
SOUTHERN AND GULF COAST DIVISION
GURLEY QUARRY
FLOW SCHEMATIC DIAGRAM

Outfall 004P

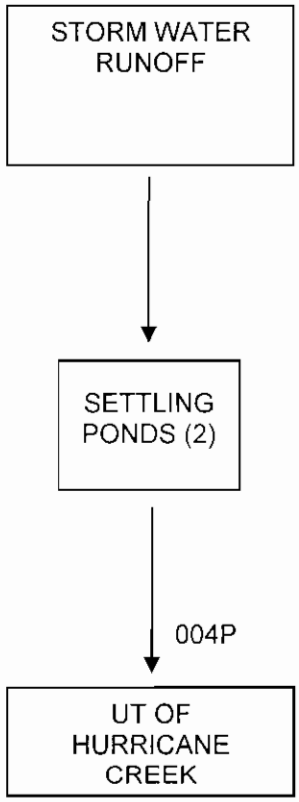

VULCAN CONSTRUCTION MATERIALS, LP
SOUTHERN AND GULF COAST DIVISION
GURLEY QUARRY
FLOW SCHEMATIC DIAGRAM

Outfall 005P

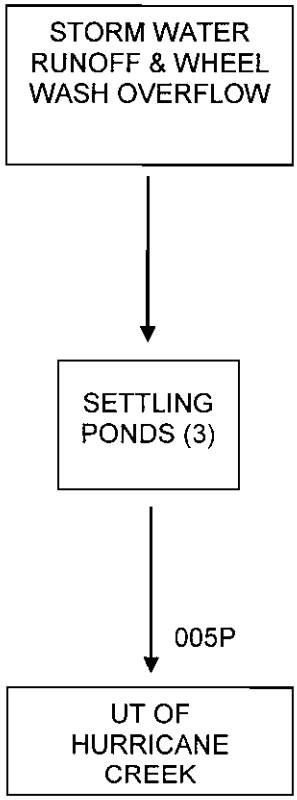

RECEIVED
OCT - 8 2013

VULCAN CONSTRUCTION MATERIALS, LP
SOUTHERN AND GULF COAST DIVISION
GURLEY QUARRY
FLOW SCHEMATIC DIAGRAM

Outfall 006P

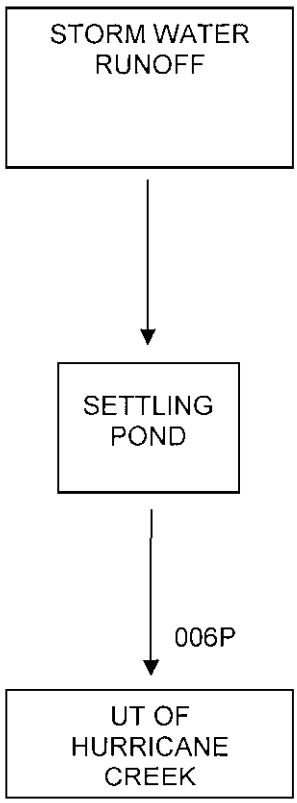

ATTACHMENT #4

POND DRAWINGS AND DIAGRAMS

VULCAN CONSTRUCTION MATERIALS, LP
SOUTHERN AND GULF COAST DIVISION
GURLEY QUARRY
Pond & Outfall Diagrams

POINT SOURCE 001E

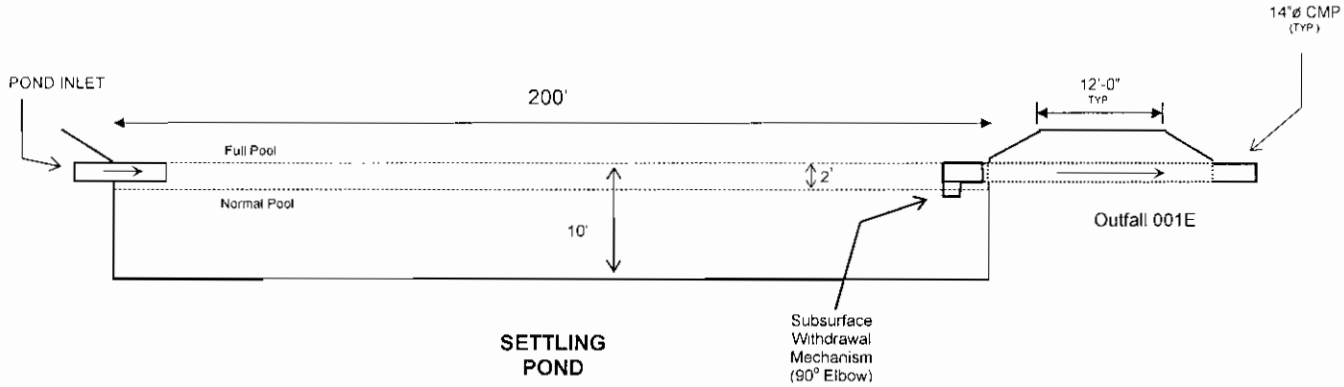

X-SECTION OF OUTLET PIPE – 001E
(Not to Scale)

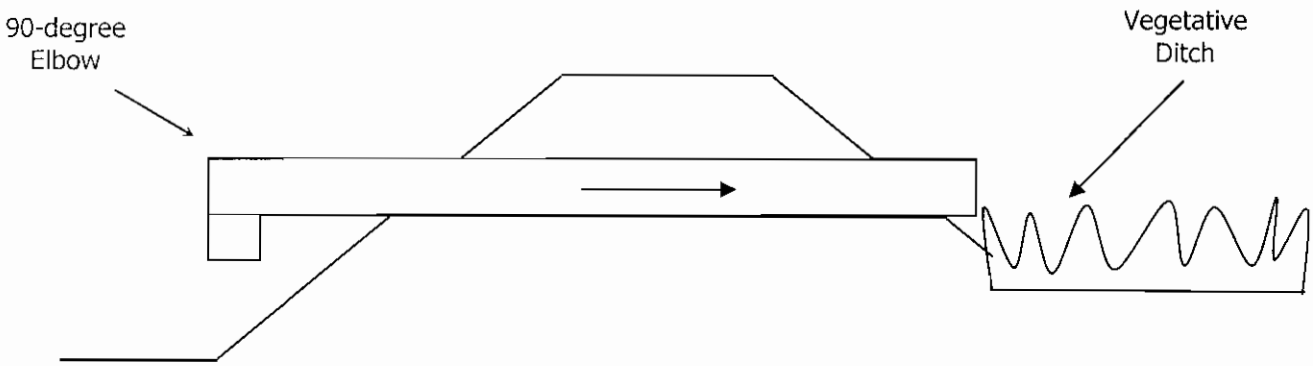

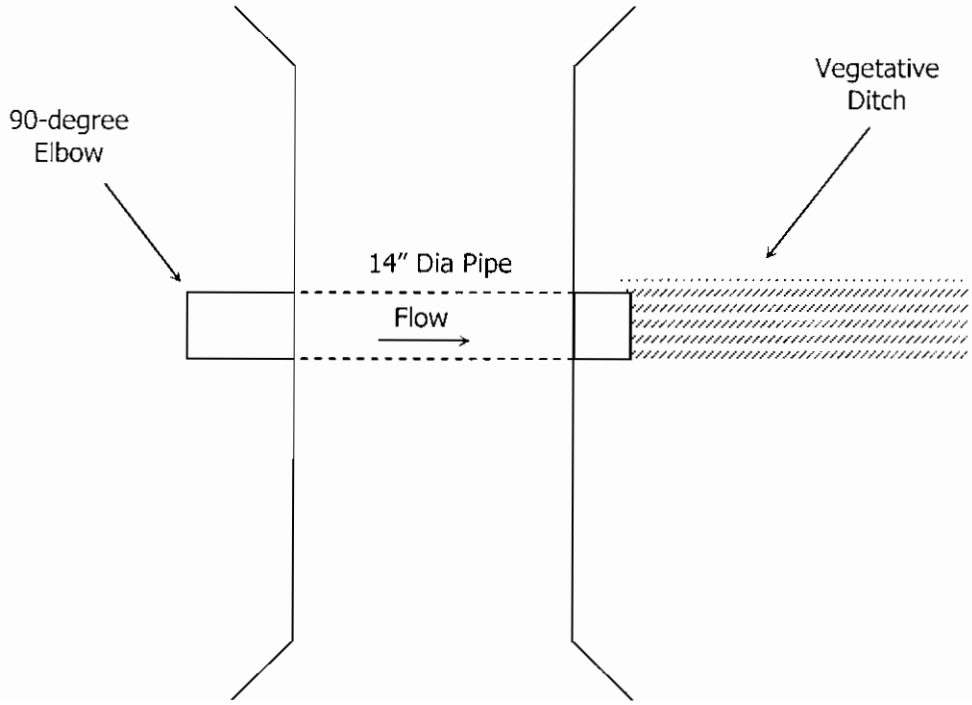

POINT SOURCE 002P

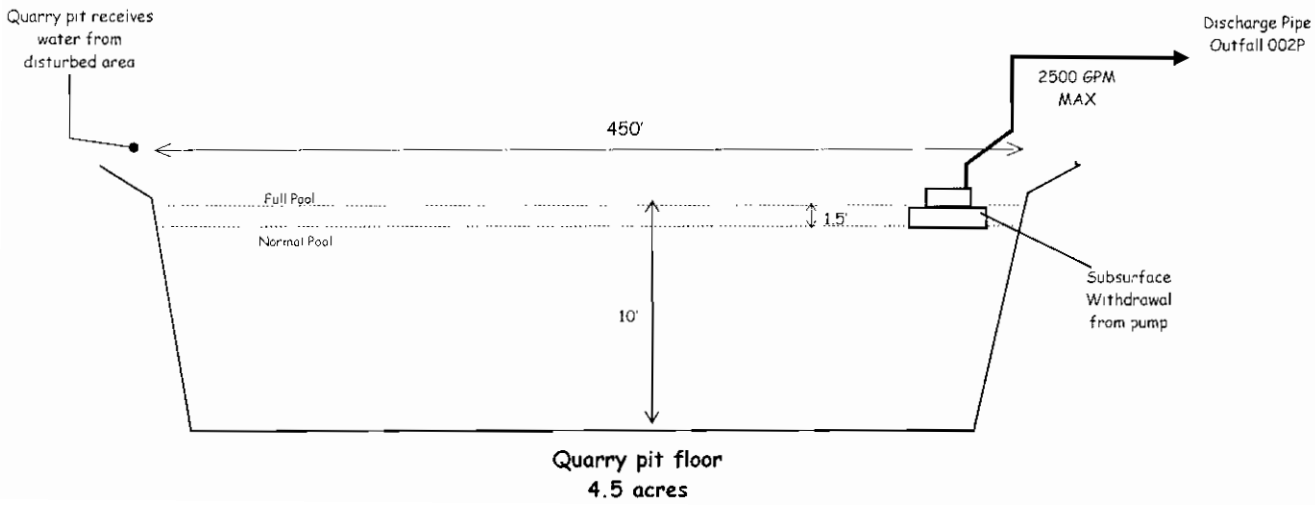

POINT SOURCE 003P

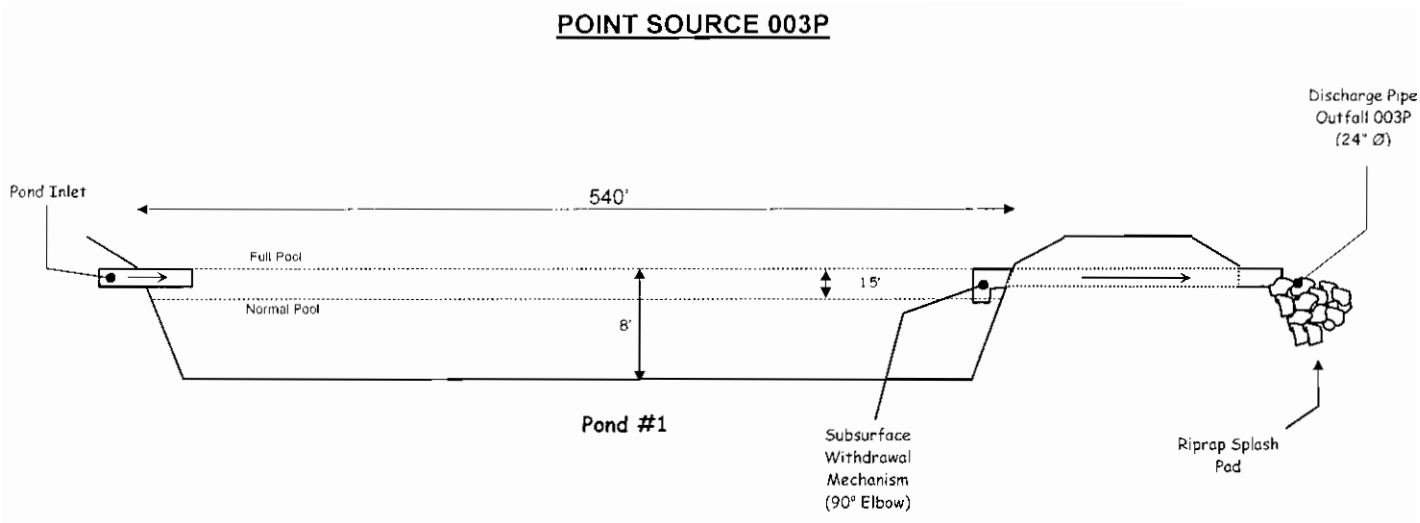

POINT SOURCE 004P

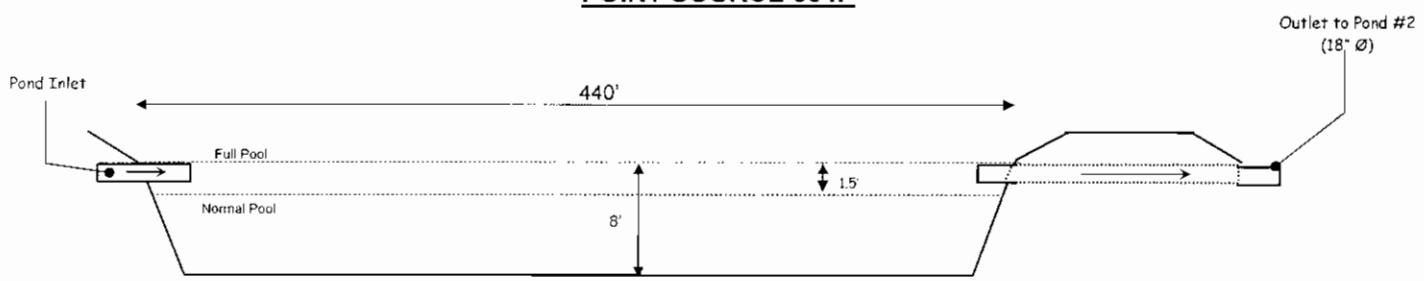

Pond #1

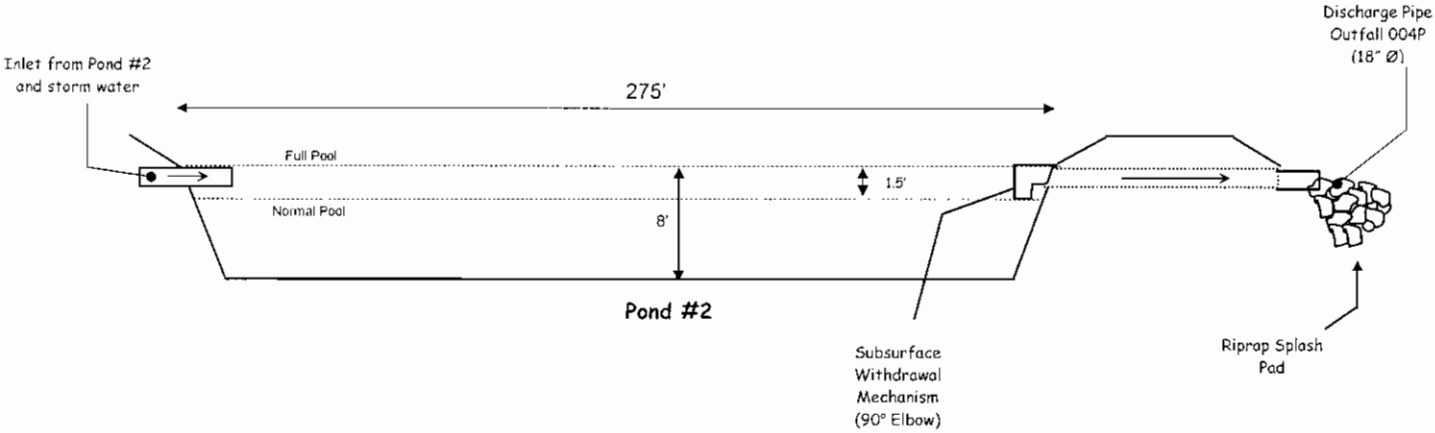

Pond #2

POINT SOURCE 005P

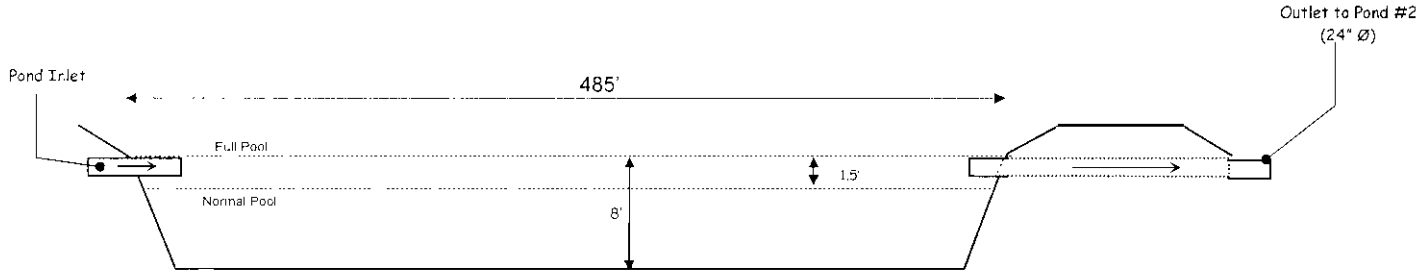

Pond #1

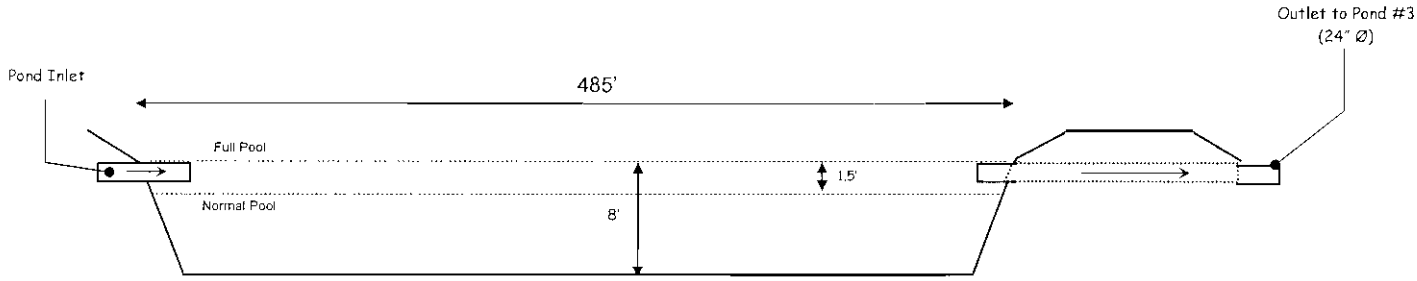

Pond #2

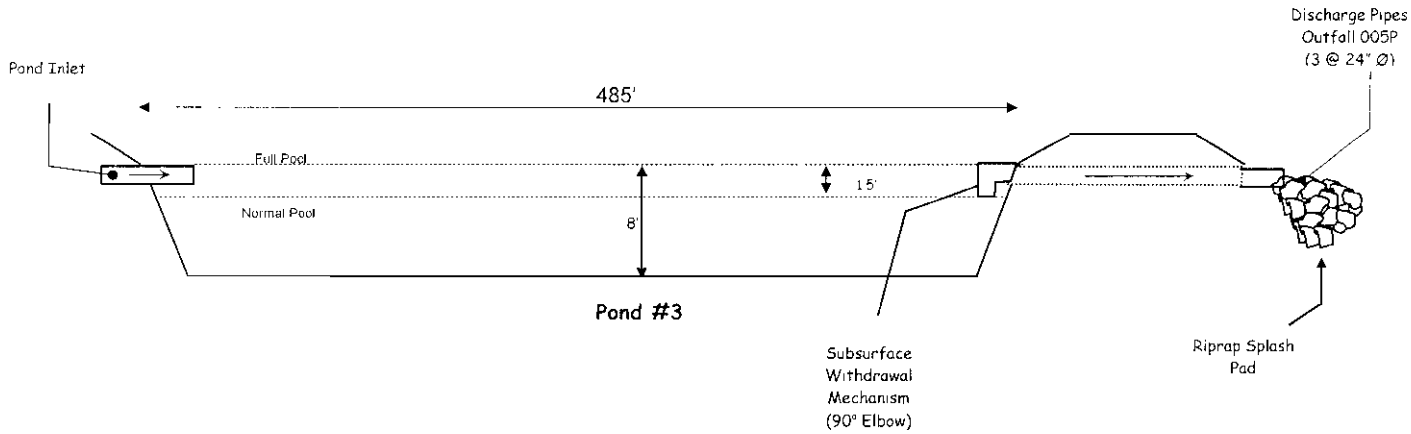

Pond #3

POINT SOURCE 006P

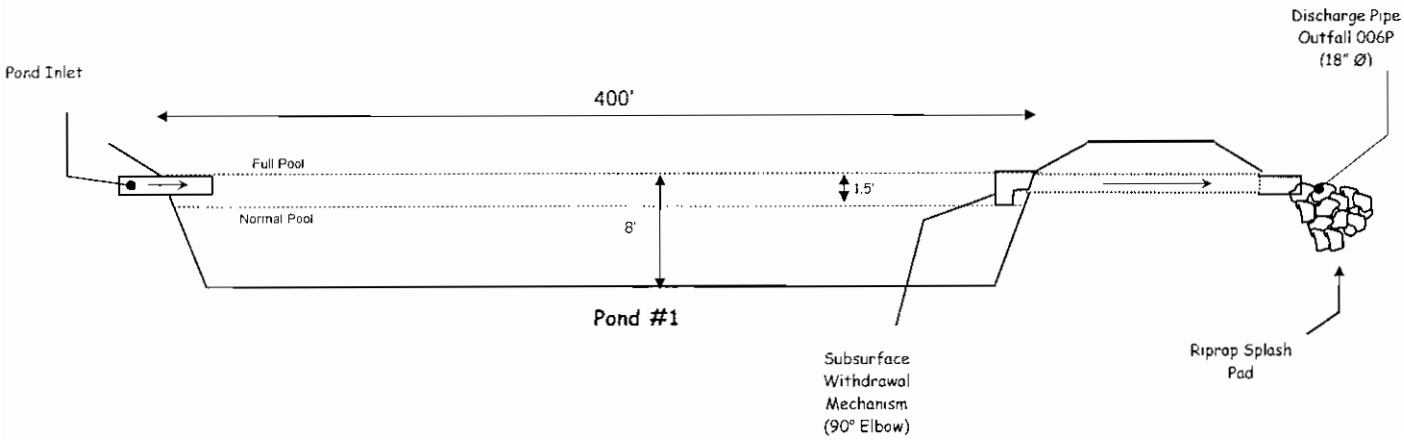

Example X-SECTION OF OUTLET PIPES
(Not to Scale)

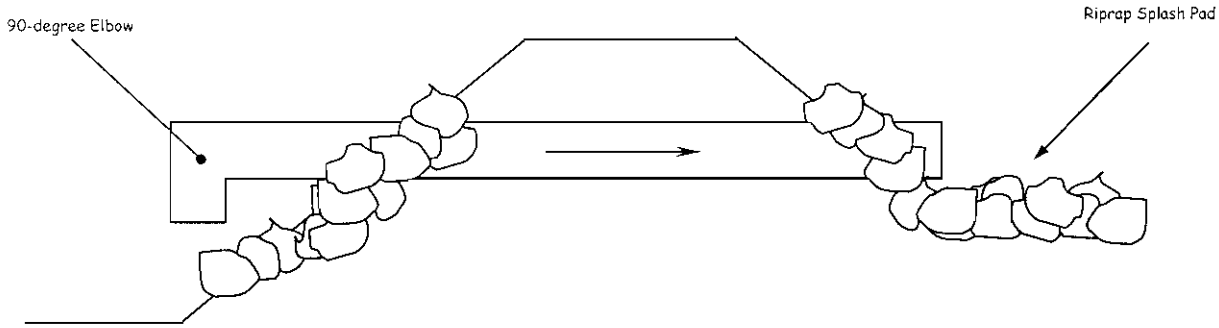

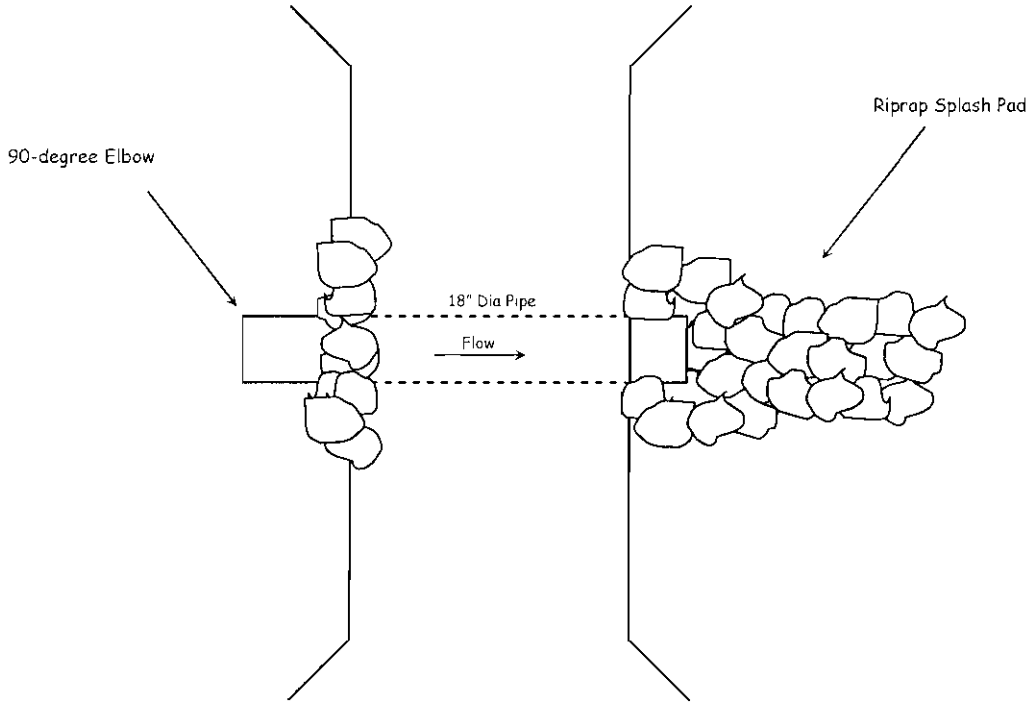

ATTACHMENT #5

CREEK CROSSING DIAGRAM

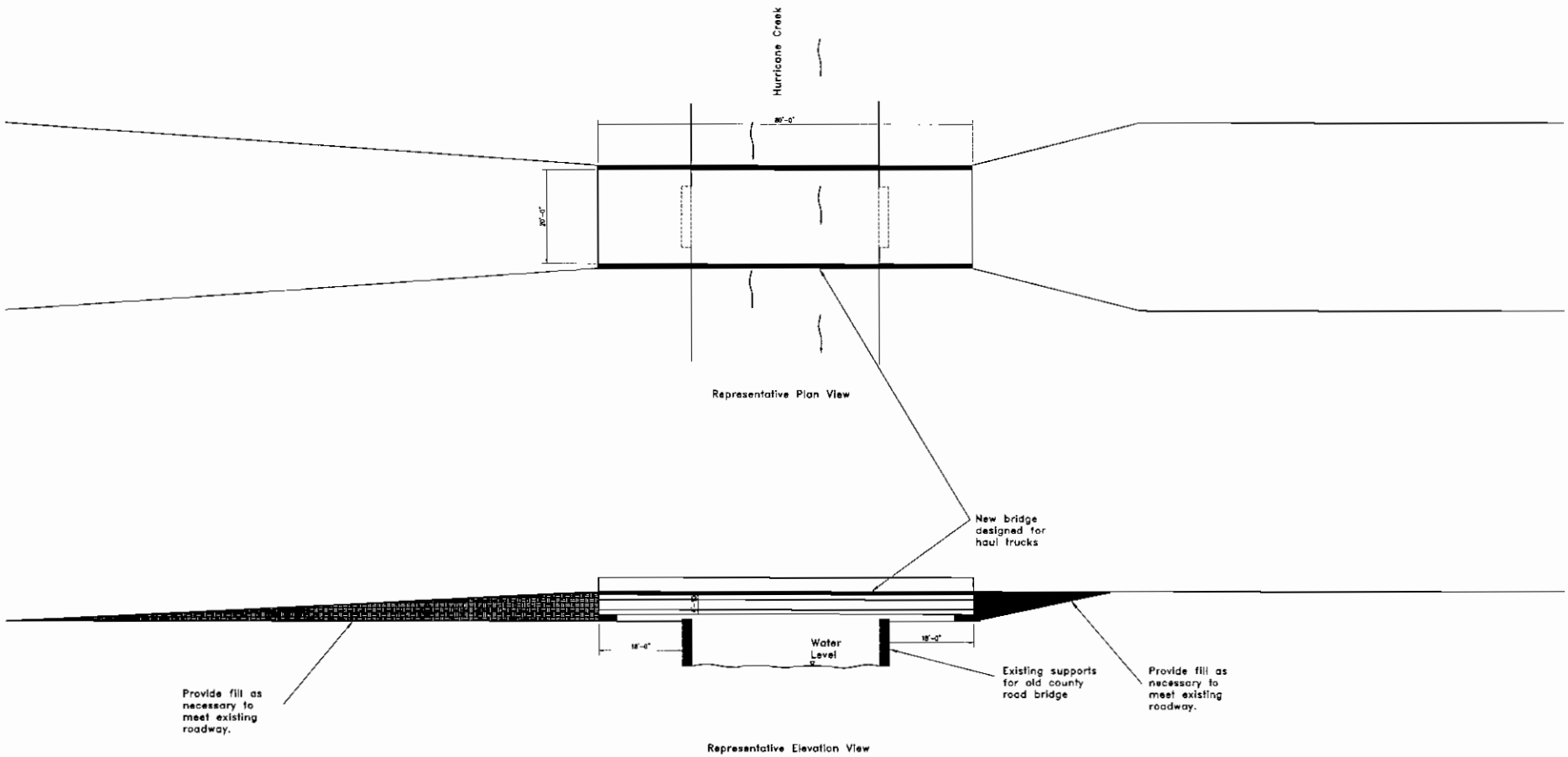

D			
C			
B			
A			
–		INITIAL RELEASE	
	DATE	REVISION	BY

TOLERANCES-UNLESS NOTED

PRINCIPAL ± 1/16"
DECIMAL ± 0.010"
ANGLE ± 0.5°

THIS DRAWING IS DESIGN AND DETAIL IS THE PROPERTY OF VULCAN MATERIALS COMPANY AND MUST BE RETURNED UPON DEMAND. THIS DRAWING MUST NOT BE COPIED, REPRODUCED, OR USED WITHOUT PERMISSION.

Vulcan Materials Company

Bridge

Alabama

GURLEY

SHEET 1 OF 1

REV

ATTACHMENT #6

DESIGN TYPICALS FOR STORM WATER BMPS

VULCAN CONSTRUCTION MATERIALS, LP
GURLEY QUARRY

DESIGN TYPICALS FOR STORM WATER RUNOFF BMPs

Diversion Berms

Earthen and rock structures (berms) are typically used at this facility for storm water retention or diversion to sediment treatment facilities and BMPs. These berms are constructed of indigenous soils that are compacted. The compacted berm is then covered with riprap for stability. Below is a diagram of a typical berm at this facility:

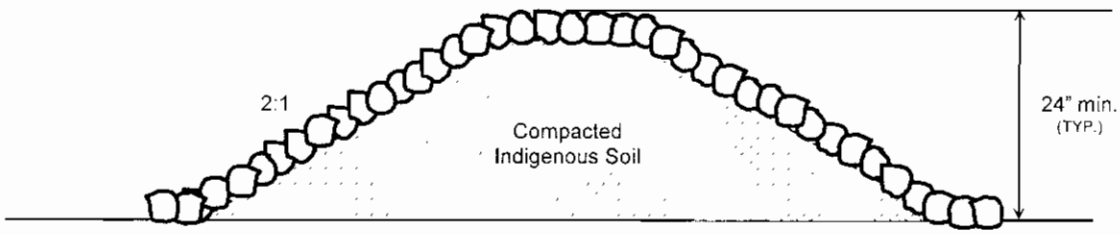

Diversion Berm Typical

Large Berms (Overburden Berms)

Large earthen berms consisting of overburden material are used at this facility for storm water diversion as well as for a buffer to the active quarry. The berms are constructed of indigenous soils that have been stripped from the active stone removal portions of the quarry. The berms are hydro-seeded with indigenous grass to stabilize the compacted material. Below is a diagram of the typical large buffer berm at this facility:

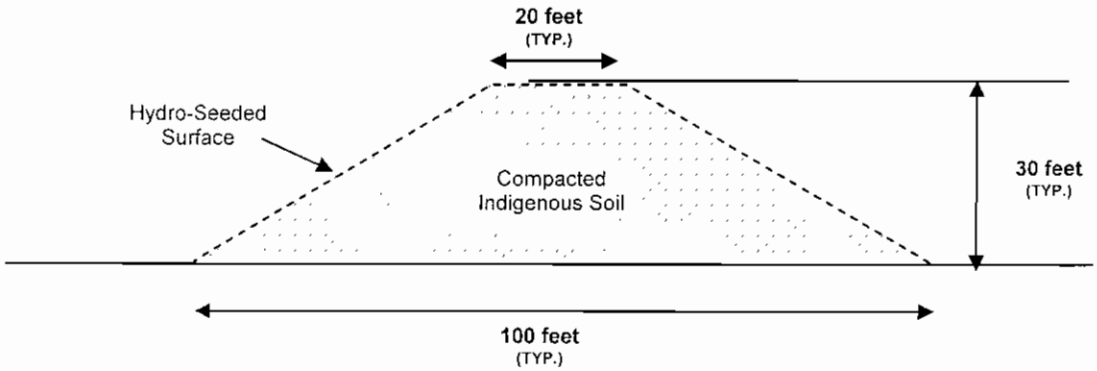

VULCAN CONSTRUCTION MATERIALS, LP
GURLEY QUARRY

DESIGN TYPICALS FOR STORM WATER RUNOFF BMPs

Rock Check Dams

A check dam is a small barrier or dam constructed across a swale, drainage ditch or other area of concentrated flow for the purpose of reducing channel erosion by reducing the velocity of the channel flow. Rock check dams are commonly used at quarry sites to slow the velocity of channeled storm water runoff and act in concert with other BMPs. Check dams at this site are constructed of stone that varies in size from Gabion size to riprap. Below is a diagram of a typical rock check dam at this facility:

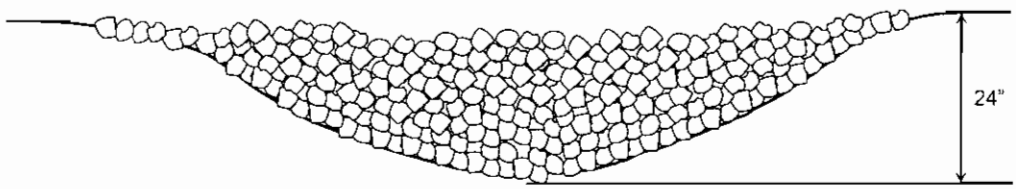

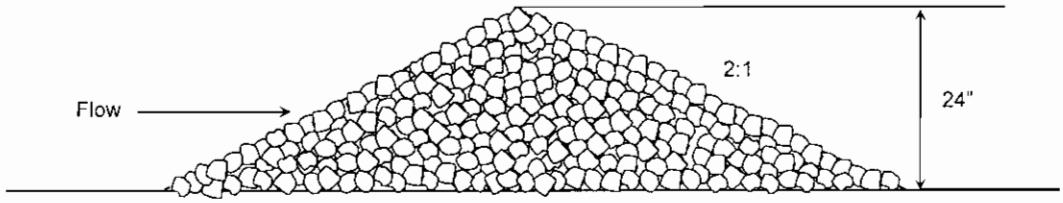

Cut-Off Trench (Ditch)

A cut-off trench is a structure used to direct storm water runoff to other storm water BMPs such as a settling pond. Cutoff trenches are used at this facility to direct storm water runoff from portions of the plant area to the settling ponds. Below is a diagram of a typical cut-off trench (ditch) used at this facility:

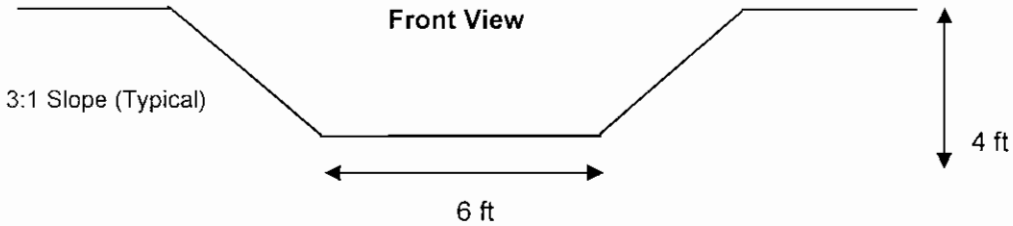

VULCAN CONSTRUCTION MATERIALS, LP
GURLEY QUARRY

DESIGN TYPICALS FOR STORM WATER RUNOFF BMPs

Sediment Barrier

A sediment barrier is a temporary structure used across a landscape to reduce the quantity of sediment that is moving farther down slope. Commonly used barriers include silt fence (a geotextile fabric which is trenched into the ground and attached to supporting posts) or hay bales trenched into the ground. Other barrier materials include sand bags, brush piles and various man-made materials that can be used in a similar manner as silt fence and hay bales. Silt fence is commonly used at stone quarries to control runoff from active spoil areas and berms that have not yet vegetated where the runoff cannot be diverted to a quarry pit or pond system. Below is a diagram of a typical Type A silt fence installation at this facility:

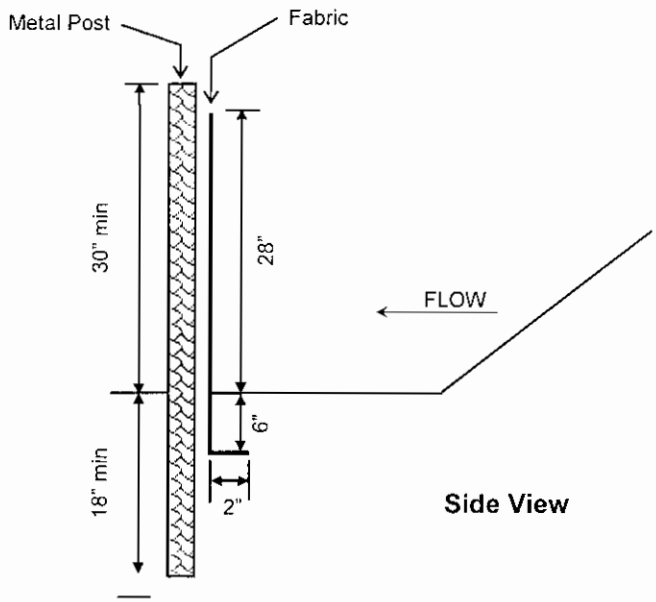

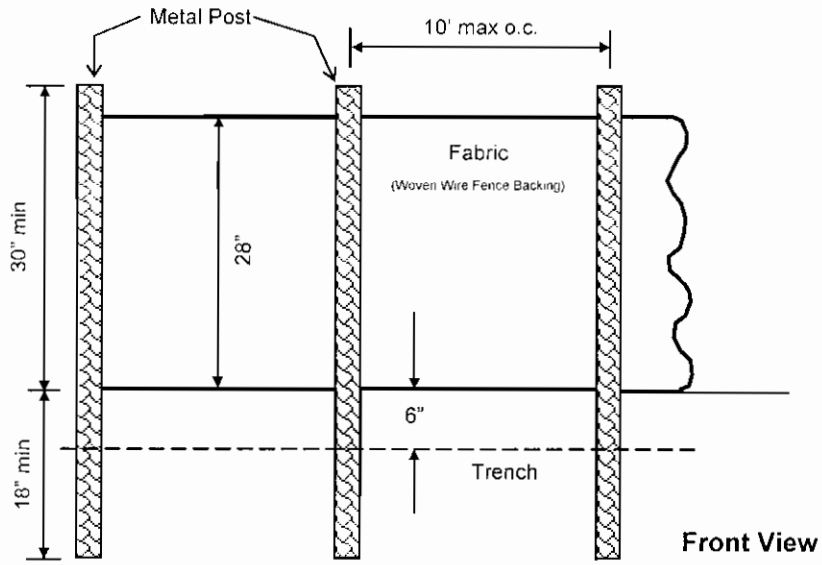

Vulcan
Materials Company

STACY F. WHITTINGTON
ENVIRONMENTAL SPECIALIST
SOUTH REGION

P O BOX 385016
BIRMINGHAM, ALABAMA 35238-5016
TELEPHONE. 205-298-3482
FAX 205-298-2675
E-MAIL whittingtons@vmcmail.com

August 26, 2013

RECEIVED
AUG 29 2013
STORM WATER MANAGEMENT BRANCH

ADEM
Mining and Natural Resources Section
Water Division
Alabama Dept. of Environmental Management
P. O. Box 301463
Montgomery, AL 36130-1463

RE: Vulcan Construction Materials, LP – Gurley Quarry
NPDES Permit Reissuance (AL0075507)

By this letter, Vulcan Construction Materials, LP submits to the Department an application for reissuance of the existing NPDES permit for the Gurley Quarry in Madison County, Alabama. This application includes the following documents:

- One (1) each check for $5,715
- One (1) each ADEM 315 Form
- One (1) each Pollution Abatement/Prevention Plan
- One (1) each USGS 7.5 Minute Series Topographic Map
- One (1) each Detailed Site Map (1"=500')
- One (1) each SPCC plan

Please review and process this information as soon as possible. If you have any questions or need additional information regarding this matter, please call me at (205) 298-3482.

Sincerely,

Stacy F. Whittington

Attachments

c: File

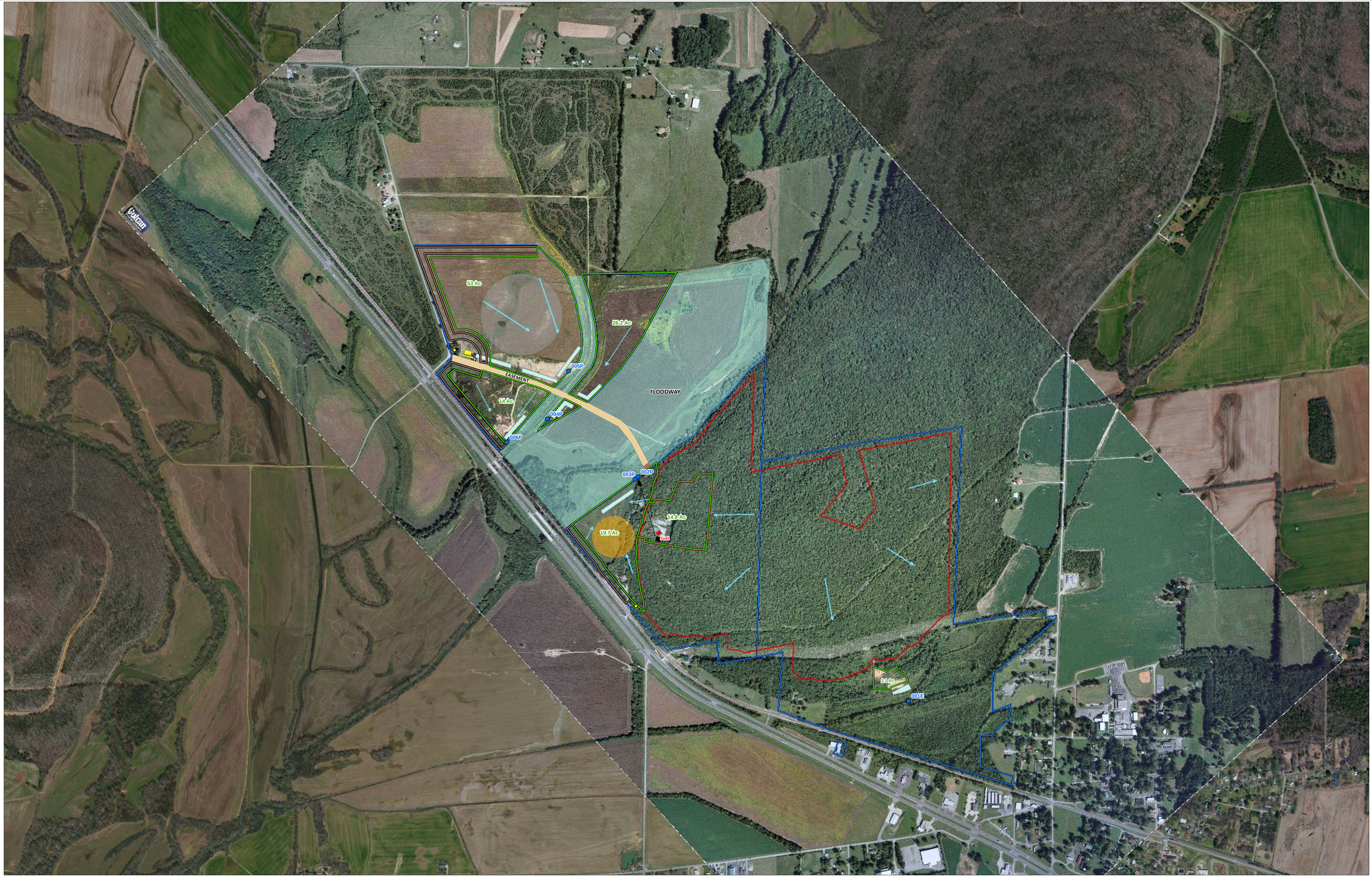

0 500 1,000 2,000 3,000 Feet

Photo Date: 09/14/2012
Print Date: 10/08/2013

Permit Signs
Outfalls
Berm
Easement
Bridge
Office and Scales
Lease Exclusion Area
Containment
Flow Direction
Ponds
Plant
Stockpiles
Pit Outline
Disturbed Area
VMC Property

Vulcan Construction Materials, LP
Gurley Quarry
Madison County, AL