ALABAMA DEPARTMENT OF ENVIRONMENTAL MANAGEMENT

AIR DIVISION - AIR POLLUTION CONTROL PROGRAM

DIVISION 335-3

1400 Coliseum Blvd.
Montgomery, Alabama 36110

CITE AS

ADEM Admin. Code r. 335-3-x-.xx

REVISED EFFECTIVE: April 13, 2020

ALABAMA DEPARTMENT OF ENVIRONMENTAL MANAGEMENT
AIR DIVISION - AIR POLLUTION CONTROL PROGRAM

DIVISION 335-3

TABLE OF CONTENTS

Chapter 335-3-1 Page No.

General Provisions

335-3-1-.01 Purpose 1-1
335-3-1-.02 Definitions 1-1
335-3-1-.03 Ambient Air Quality Standards 1-11
335-3-1-.04 Monitoring, Records, and Reporting 1-12
335-3-1-.05 Sampling and Testing Methods 1-13
335-3-1-.06 Compliance Schedule 1-14
335-3-1-.07 Maintenance and Malfunctioning of Equipment; Reporting 1-15
335-3-1-.08 Prohibition of Air Pollution 1-16
335-3-1-.09 Variances 1-16
335-3-1-.10 Circumvention 1-18
335-3-1-.11 Severability 1-18
335-3-1-.12 Bubble Provision 1-18
335-3-1-.13 Credible Evidence 1-19
335-3-1-.14 Reserved 1-19
335-3-1-.15 Emissions Inventory Reporting Requirements 1-19
335-3-1-.16 Reserved 1-21

Chapter 335-3-2

Air Pollution Emergency

335-3-2-.01 Air Pollution Emergency 2-1
335-3-2-.02 Episode Criteria 2-1
335-3-2-.03 Special Episode Criteria 2-5
335-3-2-.04 Emission Reduction Plans 2-5
335-3-2-.05 Two Contaminant Episode 2-6
335-3-2-.06 General Episodes 2-6
335-3-2-.07 Local Episodes 2-6
335-3-2-.08 Other Sources 2-7
335-3-2-.09 Other Authority Not Affected 2-8

Chapter 335-3-3

Control of Open Burning and Incineration

335-3-3-.01 Open Burning..... 3-1
335-3-3-.02 Incinerators..... 3-3
335-3-3-.03 Incineration of Wood, Peanut, and Cotton Ginning Wastes..... 3-3
335-3-3-.04 Incineration of Hospital/Medical/Infectious Waste .. 3-4
335-3-3-.05 Incineration of Commercial and Industrial Solid Waste 3-31

Chapter 335-3-4

Control of Particulate Emissions

335-3-4-.01 Visible Emissions 4-1
335-3-4-.02 Fugitive Dust and Fugitive Emissions..... 4-3
335-3-4-.03 Fuel Burning Equipment 4-4
335-3-4-.04 Process Industries - General..... 4-6
335-3-4-.05 Small Foundry Cupola..... 4-8
335-3-4-.06 Cotton Gins 4-9
335-3-4-.07 Kraft Pulp Mills 4-9
335-3-4-.08 Wood Waste Boilers 4-10
335-3-4-.09 Coke Ovens 4-11
335-3-4-.10 Primary Aluminum Plants 4-14
335-3-4-.11 Cement Plants 4-14
335-3-4-.12 Xylene Oxidation Process..... 4-15
335-3-4-.13 Reserved..... 4-16
335-3-4-.14 Grain Elevators 4-16
335-3-4-.15 Secondary Lead Smelters..... 4-17
335-3-4-.16 Reserved..... 4-19
335-3-4-.17 Steel Mills Located in Etowah County..... 4-19

Chapter 335-3-5

Control of Sulfur Compound Emissions

335-3-5-.01 Fuel Combustion 5-1
335-3-5-.02 Sulfuric Acid Plants 5-4
335-3-5-.03 Petroleum Production 5-5
335-3-5-.04 Kraft Pulp Mills 5-7
335-3-5-.05 Process Industries - General..... 5-10
335-3-5-.06 TR SO_2 Trading Program – Purpose and Definitions. 5-11
335-3-5-.07 TR SO_2 Trading Program - Applicability 5-12
335-3-5-.08 TR SO_2 Trading Program – Retired Unit Exemption.. 5-14
335-3-5-.09 TR SO_2 Trading Program – Standard Requirements . 5-15
335-3-5-.10 TR SO_2 Trading Program – Computation of Time 5-16
335-3-5-.11 Administrative Appeal Procedures 5-16
335-3-5-.12 SO_2 Trading Budgets and Variability Limits 5-17
335-3-5-.13 TR SO_2 Allowance Allocations 5-17

335-3-5-.14	Authorization of Designated Representative and Alternate Designated Representative	5-23
335-3-5-.15	Responsibilities of Designated Representative and Alternate Designated Representative	5-23
335-3-5-.16	Changing Designated Representative and Alternate Representative; Changes in Owners and Operators; Changes in Units at the Source	5-23
335-3-5-.17	Certificate of Representation	5-24
335-3-5-.18	Objections Concerning Designated Representative and Alternate Designated Representative	5-24
335-3-5-.19	Delegation by Designated Representative and Alternate designated Representative	5-24
335-3-5-.20	Reserved	5-25
335-3-5-.21	Establishment of Compliance Accounts, Assurance Accounts, and General Accounts	5-25
335-3-5-.22	Recordation of TR SO_2 Allowance Allocations and Auction Results	5-25
335-3-5-.23	Submission of TR SO_2 Allowance Transfers	5-25
335-3-5-.24	Recordation of TR SO_2 Allowance Transfers	5-26
335-3-5-.25	Compliance with TR SO_2 Emissions Limitation	5-26
335-3-5-.26	Compliance with TR SO_2 Assurance Provisions	5-26
335-3-5-.27	Banking	5-26
335-3-5-.28	Account Error	5-27
335-3-5-.29	Administrator's Action on Submissions	5-27
335-3-5-.30	Reserved	5-27
335-3-5-.31	General Monitoring, Recordkeeping, and Reporting Requirements	5-27
335-3-5-.32	Initial Monitoring System Certification and Recertification Procedures	5-28
335-3-5-.33	Monitoring System Out-of-Control Periods	5-28
335-3-5-.34	Notifications Concerning Monitoring	5-29
335-3-5-.35	Recordkeeping and Reporting	5-29
335-3-5-.36	Petitions for Alternatives to Monitoring, Recordkeeping, or Reporting Requirements	5-29

Chapter 335-3-6

Control of Organic Emissions

335-3-6-.01	Applicability	6-2
335-3-6-.02	VOC Water Separation	6-3
335-3-6-.03	Loading and Storage of VOC	6-4
335-3-6-.04	Fixed-Roof Petroleum Liquid Storage Vessels.....	6-5
335-3-6-.05	Bulk Gasoline Plants	6-7
335-3-6-.06	Bulk Gasoline Terminals	6-9
335-3-6-.07	Gasoline Dispensing Facilities - Stage I	6-10
335-3-6-.08	Petroleum Refinery Sources.....	6-12
335-3-6-.09	Pumps and Compressors.....	6-14
335-3-6-.10	Ethylene Producing Plants.....	6-14
335-3-6-.11	Surface Coating.....	6-14

335-3-6-.12 Solvent Metal Cleaning 6-23
335-3-6-.13 Cutback Asphalt..... 6-28
335-3-6-.14 Petition for Alternative Controls..... 6-29
335-3-6-.15 Compliance Schedules..... 6-30
335-3-6-.16 Test Methods and Procedures 6-33
335-3-6-.17 Manufacture of Pneumatic Rubber Tires..... 6-49
335-3-6-.18 Manufacture of Synthesized Pharmaceutical Products 6-51
335-3-6-.19 Reserved..... 6-53
335-3-6-.20 Leaks from Gasoline Tank Trucks and Vapor Collection Systems 6-53
335-3-6-.21 Leaks from Petroleum Refinery Equipment 6-56
335-3-6-.22 Graphic Arts 6-59
335-3-6-.23 Petroleum Liquid Storage In External Floating Roof Tanks 6-60
335-3-6-.24 Applicability 6-63
335-3-6-.25 VOC Water Separation..... 6-64
335-3-6-.26 Loading and Storage of VOC 6-65
335-3-6-.27 Fixed-Roof Petroleum Liquid Storage Vessels..... 6-66
335-3-6-.28 Bulk Gasoline Plants 6-68
335-3-6-.29 Bulk Gasoline Terminals 6-70
335-3-6-.30 Gasoline Dispensing Facilities - Stage I Control..... 6-72
335-3-6-.31 Reserved..... 6-74
335-3-6-.32 Surface Coating 6-74
335-3-6-.33 Solvent Metal Cleaning 6-85
335-3-6-.34 Cutback and Emulsified Asphalt 6-90
335-3-6-.35 Petition for Alternative Control Strategies 6-92
335-3-6-.36 Compliance Schedules..... 6-93
335-3-6-.37 Test Methods and Procedures 6-97
335-3-6-.38 Reserved..... 6-110
335-3-6-.39 Manufacture of Synthesized Pharmaceutical Products 6-110
335-3-6-.40 Reserved..... 6-113
335-3-6-.41 Leaks From Gasoline Tank Trucks and Vapor Collection Systems 6-113
335-3-6-.42 Reserved..... 6-115
335-3-6-.43 Graphic Arts 6-115
335-3-6-.44 Petroleum Liquid Storage In External Floating Roof Tanks 6-118
335-3-6-.45 Large Petroleum Dry Cleaners 6-121
335-3-6-.46 Reserved..... 6-125
335-3-6-.47 Leaks From Coke By-product Recovery Plant Equipment..... 6-125
335-3-6-.48 Emissions From Coke By-product Recovery Plant Coke Oven Gas Bleeder 6-130
335-3-6-.49 Manufacture of Laminated Countertops 6-130
335-3-6-.50 Paint Manufacture..... 6-133
335-3-6-.51 Reserved..... 6-135
335-3-6-.52 Seasonal Afterburner Shutdown-VOC Control Only. 6-135

335-3-6-.53 List of EPA Approved and Equivalent Test Methods and Procedures for the Purpose of Determining VOC Emissions 6-136

Chapter 335-3-7

Control of Carbon Monoxide Emissions

335-3-7-.01 Metals Production 7-1
335-3-7-.02 Petroleum Processes 7-1

Chapter 335-3-8

Control of Nitrogen Oxide Emissions

335-3-8-.01 Standards for Portland Cement Kilns 8-3
335-3-8-.02 Nitric Acid Manufacturing 8-6
335-3-8-.03 NO_X Emissions from Electric Utility Steam Generating Units 8-6
335-3-8-.04 Standards for Stationary Reciprocating Internal Combustion Engines 8-7
335-3-8-.05 New Combustion Sources 8-15
335-3-8-.06 Standards for New Combined-Cycle Electric Generating Units 8-15
335-3-8-.07 TR NOx Annual Trading Program – Purpose and Definitions..... 8-16
335-3-8-.08 TR NOx Annual Trading Program - Applicability..... 8-18
335-3-8-.09 TR NOx Annual Trading Program – Retired Unit Exemption..... 8-20
335-3-8-.10 TR NOx Annual Trading Program – Standard Requirements..... 8-21
335-3-8-.11 TR NOx Annual Trading Program – Computation of Time..... 8-22
335-3-8-.12 Administrative Appeal Procedures 8-22
335-3-8-.13 NOx Annual Trading Budgets and Variability Limits 8-22
335-3-8-.14 TR NOx Annual Allowance Allocations..... 8-22
335-3-8-.15 Reserved..... 8-28
335-3-8-.16 Authorization of Designated Representative and Alternate Designated Representative 8-28
335-3-8-.17 Responsibilities of Designated Representative and Alternate Designated Representative 8-28
335-3-8-.18 Changing Designated Representative and Alternate Designated Representative; Changes in Owners and Operators; Changes in Units at the Source..... 8-28
335-3-8-.19 Certificate of Representation..... 8-29
335-3-8-.20 Objections Concerning Designated Representative and Alternate Designated Representative 8-29
335-3-8-.21 Delegation by designated Representative and Alternate Designated Representative 8-29
335-3-8-.22 Reserved..... 8-30

335-3-8-.23	Establishment of Compliance Accounts, Assurance Accounts, and General Accounts	8-30
335-3-8-.24	Recordation of TR NOx Annual Allowance Allocations and Auction Results	8-30
335-3-8-.25	Submission of TR NOx Annual Allowance Transfers	8-31
335-3-8-.26	Recordation of TR NOx Annual Allowance Transfers	8-31
335-3-8-.27	Compliance with TR NOx Annual Emissions Limitation	8-31
335-3-8-.28	Compliance with TR NOx Annual Assurance Provisions	8-31
335-3-8-.29	Banking	8-32
335-3-8-.30	Account Error	8-32
335-3-8-.31	Administrator's Action on Submissions	8-32
335-3-8-.32	Reserved	8-33
335-3-8-.33	General Monitoring, Recordkeeping, and Reporting Requirements	8-33
335-3-8-.34	Initial Monitoring System Certification and Recertification Procedures	8-33
335-3-8-.35	Monitoring System Out-of-Control Periods	8-33
335-3-8-.36	Notifications Concerning Monitoring	8-34
335-3-8-.37	Recordkeeping and Reporting	8-34
335-3-8-.38	Petitions for Alternatives to Monitoring, Recordkeeping, or Reporting Requirements	8-34
335-3-8-.39	TR NOx Ozone Season Trading Program – Purpose and Definitions	8-35
335-3-8-.40	TR NOx Ozone Season Trading Program – Applicability	8-36
335-3-8-.41	TR NOx Ozone Season Trading Program – Retired Unit Exemption	8-38
335-3-8-.42	TR NOx Ozone Season Trading Program – Standard Requirements	8-39
335-3-8-.43	TR NOx Ozone Season Trading Program – Computation of Time	8-40
335-3-8-.44	Administrative Appeal Procedures	8-40
335-3-8-.45	NOx Ozone Season Trading Budgets and Variability Limits	8-41
335-3-8-.46	TR NOx Ozone Season Allowance Allocations	8-41
335-3-8-.47	Reserved	8-46
335-3-8-.48	Authorization of Designated Representative and Alternate Designated Representative	8-46
335-3-8-.49	Responsibilities of Designated Representative and Alternate Designated Representative	8-47
335-3-8-.50	Changing Designated Representative and Alternate Designated Representative; Changes in Owners and Operators; Changes in Units at the Source	8-47
335-3-8-.51	Certificate of Representation	8-47
335-3-8-.52	Objections Concerning Designated Representative and Alternate Designated Representative	8-48
335-3-8-.53	Delegation by Designated Representative and Alternate Designated Representative	8-48

335-3-8-.54	Reserved	8-48
335-3-8-.55	Establishment of Compliance Accounts, Assurance Accounts, and General Accounts	8-48
335-3-8-.56	Recordation of TR NOx Ozone Season Group 2 Allowance Allocations and Auction Results	8-49
335-3-8-.57	Submission of TR NOx Ozone Season Group 2 Allowance Transfers	8-49
335-3-8-.58	Recordation of TR NOx Ozone Season Group 2 Allowance Transfers	8-50
335-3-8-.59	Compliance with TR NOx Ozone Season Group 2 Emissions Limitation	8-50
335-3-8-.60	Compliance with TR NOx Ozone Season Group 2 Assurance Provisions	8-50
335-3-8-.61	Banking	8-50
335-3-8-.62	TR NOx Ozone Season Group 2 Trading Program – Account Error	8-51
335-3-8-.63	TR NOx Ozone Season Group 2 Trading Program – Administrator's Action on Submissions	8-51
335-3-8-.64	Reserved	8-51
335-3-8-.65	General Monitoring, Recordkeeping, and Reporting Requirements	8-51
335-3-8-.66	Initial Monitoring System Certification and Recertification Procedures	8-52
335-3-8-.67	Monitoring System Out-of-Control Periods	8-52
335-3-8-.68	Notifications Concerning Monitoring	8-53
335-3-8-.69	Recordkeeping and Reporting	8-53
335-3-8-.70	Petitions for Alternatives to Monitoring, Recordkeeping, or Reporting Requirements	8-53
335-3-8-.71	NOx Budget Program	8-53
335-3-8-.72	NOx Budget Program Monitoring and Reporting	8-65

Chapter 335-3-9

Control of Emissions from Motor Vehicles

335-3-9-.01	Visible Emission Restrictions for Motor Vehicles	9-1
335-3-9-.02	Ignition System and Engine Speed	9-1
335-3-9-.03	Crankcase Ventilation Systems	9-2
335-3-9-.04	Exhaust Emission Control Systems.....	9-2
335-3-9-.05	Evaporative Loss Control Systems	9-3
335-3-9-.06	Other Prohibited Acts	9-4
335-3-9-.07	Effective Date	9-4

Chapter 335-3-10

Standards of Performance for New Stationary Sources

335-3-10-.01	General	10-1
335-3-10-.02	Designated Standards of Performance	10-2
335-3-10-.03	Appendices to 40 CFR 60	10-8
335-3-10-.04	Word or Phrase Substitutions.....	10-8

National Emission Standards for Hazardous Air Pollutants

335-3-11-.01 General..... 11-1
335-3-11-.02 Designated Emission Standards 11-2
335-3-11-.03 Appendices to 40 CFR 61 11-4
335-3-11-.04 Word or Phrase Substitutions..... 11-4
335-3-11-.05 Certification of Asbestos Abatement Contractors 11-4
335-3-11-.06 National Emission Standards for Hazardous Air Pollutants for Source Categories..... 11-6
335-3-11-.07 Appendices to 40 CFR 63 11-15

Chapter 335-3-11A

Consolidated Federal Air Rule Regarding New Source Performance Standards and National Emission Standards for Hazardous Air Pollutants

335-3-11A-.01 General..... 11A-1
335-3-11A-.02 Designated Emission Standards 11A-1
335-3-11A-.03 Word or Phrase Substitutions..... 11A-2

Chapter 335-3-12

Continuous Monitoring Requirements for Existing Sources

335-3-12-.01 Definitions..... 12-1
335-3-12-.02 Emission Monitoring and Reporting Requirements .. 12-2
335-3-12-.03 Monitoring System Malfunction..... 12-3
335-3-12-.04 Alternate Monitoring and Reporting Requirements .. 12-4
335-3-12-.05 Exemptions and Extensions 12-5

Chapter 335-3-13

Control of Fluoride Emissions

335-3-13-.01 Definitions..... 13-1
335-3-13-.02 Superphosphoric Acid Plants..... 13-1
335-3-13-.03 Diammonium Phosphate Plants..... 13-1
335-3-13-.04 Triple Superphosphate Plants..... 13-2
335-3-13-.05 Granular Triple Superphosphate Storage Facilities.. 13-2
335-3-13-.06 Wet Process Phosphoric Acid Plants 13-3

Chapter 335-3-14

Permits

335-3-14-.01 General Provisions..... 14-1
335-3-14-.02 Permit Procedure 14-5
335-3-14-.03 Standards for Granting Permits..... 14-7

335-3-14-.04 Air Permits Authorizing Construction in Clean Air Areas [Prevention of Significant Deterioration Permitting (PSD)] 14-14
335-3-14-.05 Air Permits Authorizing Construction In or Near Non-Attainment Areas 14-63
335-3-14-.06 Requirements for Control Technology [Determinations for Major Sources in Accordance with Clean Air Act Section 112 (g)] 14-102

Chapter 335-3-15

Synthetic Minor Operating Permits

335-3-15-.01 Definitions..... 15-1
335-3-15-.02 General Provisions..... 15-2
335-3-15-.03 Applicability 15-11
335-3-15-.04 Synthetic Minor Operating Permit Requirements..... 15-11
335-3-15-.05 Public Participation 15-14

Chapter 335-3-16

Major Source Operating Permits

335-3-16-.01 Definitions..... 16-1
335-3-16-.02 General Provisions..... 16-8
335-3-16-.03 Applicability 16-16
335-3-16-.04 Permit Application Requirements 16-16
335-3-16-.05 Permit Content 16-20
335-3-16-.06 Federally Enforceable Requirements..... 16-24
335-3-16-.07 Compliance Requirements..... 16-24
335-3-16-.08 General Permits..... 16-26
335-3-16-.09 Temporary Sources 16-28
335-3-16-.10 Permit Shield..... 16-28
335-3-16-.11 Exceptions to Violations of Emissions Limits..... 16-29
335-3-16-.12 Permit Issuance..... 16-30
335-3-16-.13 Permit Modifications or Amendments 16-31
335-3-16-.14 Off-Permit Changes 16-35
335-3-16-.15 Permit Review by EPA, Affected States and Public ... 16-36

Chapter 335-3-17

Conformity of Federal Actions to State Implementation Plans

335-3-17-.01 Transportation Conformity 17-1
335-3-17-.02 General Conformity 17-1

Chapter 335-3-18

Acid Rain Program

335-3-18-.01 General - Permits Regulation..... 18-1
335-3-18-.02 Nitrogen Oxides Emission Reduction Program..... 18-1

Control of Municipal Solid Waste Landfill Gas Emissions (Repealed)

335-3-19-.01 Reserved 19-1
335-3-19-.02 Reserved 19-1
335-3-19-.03 Reserved 19-1
335-3-19-.04 Reserved 19-1
335-3-19-.05 Reserved 19-1

Appendix A - - - - - Class I Counties A-1

Appendix B - - - - - Sulfur Dioxide Priority Classifications of Counties ... B-1

Appendix C - - - - - Environmental Protection Agency Regulations Reference Documents for New Source Performance Standards and National Emission Standards for Hazardous Air Pollutants C-1

Appendix D - - - - - Nonattainment Areas D-1

Appendix E - - - - - Attainment Areas - Ozone E-1

Appendix F - - - - - U. S. Environmental Protection Agency Capture Efficiency Procedures..... F-1

Appendix G - - - - - Clean Air Act Amendments of 1990 - List of Hazardous Air Pollutants G-1

Appendix H - - - - - Exemption Claim Forms for Co Fired Combustors H-1

Appendix I - - - - - Greenhouse Gas Global Warming Potentials I-1

ALABAMA DEPARTMENT OF ENVIRONMENTAL MANAGEMENT
AIR DIVISION - AIR POLLUTION CONTROL PROGRAM

CHAPTER 335-3-1
GENERAL PROVISIONS

TABLE OF CONTENTS

335-3-1-.01 Purpose
335-3-1-.02 Definitions
335-3-1-.03 Ambient Air Quality Standards
335-3-1-.04 Monitoring, Records, and Reporting
335-3-1-.05 Sampling and Testing Methods
335-3-1-.06 Compliance Schedule
335-3-1-.07 Maintenance and Malfunctioning of Equipment; Reporting
335-3-1-.08 Prohibition of Air Pollution
335-3-1-.09 Variances
335-3-1-.10 Circumvention
335-3-1-.11 Severability
335-3-1-.12 Bubble Provision
335-3-1-.13 Credible Evidence
335-3-1-.14 Reserved
335-3-1-.15 Emissions Inventory Reporting Requirements
335-3-1-.16 Reserved

335-3-1-.01 Purpose. The purpose of these rules and regulations is to protect and enhance the public health and welfare through the development and implementation of coordinated statewide programs for the prevention, abatement and control of air pollution.

Author: Tommy E. Bryan.
Statutory Authority: Code of Alabama 1975, §§22-28-14, 22-22A-5, 22-22A-6, and 22-22A-8.
History: Effective Date: June 22, 1989.
Amended:

335-3-1-.02 Definitions.

(1) Meaning of Terms. As used in these rules and regulations, terms shall have the meanings ascribed in this rule.

(a) "Act" shall mean the Alabama Air Pollution Control Act of 1971, Act No. 769, Regular Session, 1971.

(b) "Adjudication" shall mean decisions, orders, decrees, determinations, or rulings by the Commission or its authorized Hearing officers and is specifically

limited to decisions in regard to citations, Sections 17(e) and (f) of the Act, and variances, Section 12 of the Act.

(c) "Adjudication Hearing" shall mean a hearing held before the Commission or its authorized Hearing Officer, pursuant to the issuance of a citation(s), Section 17(e) and (f) of the Act, and variances, Section 12 of the Act, for the purpose of establishing a record and a set of recommendations to provide the basis for an adjudication by the Commission of a contested case.

(d) "Air Contaminant" shall mean any solid, liquid, or gaseous matter, any odor, or any combination thereof, from whatever source.

(e) "Air Pollution" shall mean the presence in the outdoor atmosphere of one or more air contaminants in such quantities and duration as are, or tend to be, injurious to human health or welfare, animal or plant life, or property, or would interfere with the enjoyment of life or property throughout the State and in such territories of the State as shall be affected thereby.

(f) "Air Pollution Emergency" shall mean a situation in which meteorological conditions and/or contaminant levels in the ambient air reach or exceed the levels which may cause imminent and substantial endangerment to health.

(g) "Air Quality Control Region" shall mean jurisdictional areas designated in 40 CFR 81.

(h) "Capture System" shall mean the equipment (including hoods, ducts, fans, etc.) used to contain, capture, or transport a pollutant to a control device.

(i) "Chairman" shall mean the Chairman or, in his absence, the Vice Chairman of the Commission.

(j) "Citation" shall mean a notice sent by the Commission or its authorized agent (to suspected violators of the Act) pursuant to Section 17(e).

(k) "Coating" shall mean a protective, decorative, or functional film applied in a thin layer to a surface substrate.

(l) "Coating Applicator" shall mean an apparatus used to apply a surface coating.

(m) "Coating Line" shall mean one or more apparatus or operations which may include any number or combination of coating applicators, flash-off areas, and ovens wherein a surface coating is applied, dried, and/or cured.

(n) "Commenced" shall mean that an owner or operator has undertaken a continuous program of construction or modification or that an owner or operator has entered into a binding agreement or contractual obligation to undertake and complete, within a reasonable time, a continuous program of construction or modification.

(o) "Commission" shall mean the "Environmental Management Commission".

(p) "Construction" shall mean fabrication, erection, or installation of an affected facility.

(q) "Continuous Vapor Control System" shall mean a vapor control system that treats vapors displaced from tanks during filling on a demand basis without intermediate accumulation.

(r) "Control Device" shall mean any device which has the function of controlling the emissions from a process, fuel-burning, or refuse-burning device and thus reduces the creation of or the emission of air contaminants into the atmosphere, or both.

(s) "Control Regulation" shall mean a legally enforceable emission control strategy.

(t) "Control Strategy" shall mean a collection of various emission standards selected for the different categories of sources.

(u) "County Classification" shall mean the designation Class 1 County or Class 2 County. All facilities, plants, or other installations shall be subject to the restrictions on air pollution emissions specific to the county classification of the county in which they are located.

1. A "Class 2 County" shall mean a county in which:

(i) More than 50 percent of the county population resides in a non-urban place, as defined by the U.S. Department of Commerce Census Bureau for 1970.

(ii) No secondary National Ambient Air Quality Standards are being exceeded, based on 1971 air quality measurements.

2. A "Class 1 County" shall mean a county in which the conditions of either subparagraph 1.(i) or 1.(ii) above or both are not met.

(v) "Day" shall mean a twenty-four (24) hour period beginning at midnight.

(w) "Department" shall mean the Alabama Department of Environmental Management.

(x) "Director" shall mean the Director of the Department of Environmental Management.

(y) "Effluent Water Separator" shall mean any tank, box, sump, or other container in which any volatile organic compound floating on or entrained or contained in water entering such tank, box, sump, or other container is physically separated and removed from such water prior to outfall, drainage, or recovery of such water.

(z) "Emission" shall mean a release into the outdoor atmosphere of air contaminants.

(aa) "Employee" shall mean any employee of the Commission or Division.

(bb) "Existing Source" shall mean any source in operation or on which construction has commenced on the date of initial adoption of an applicable rule or regulation; except that any existing source which has undergone modification after the date of initial adoption of an applicable rule or regulation, shall be reclassified and considered a new source.

(cc) "Federal Act" shall mean the Clean Air Act (42 U.S.C. 1857 et seq.) as last amended, and as may hereafter be amended.

(dd) "Flash-Off Area" shall mean the space between the application area and the oven.

(ee) "Fuel-Burning Equipment" shall mean any equipment, device, or contrivance and all appurtenances thereto, including ducts, breechings, fuel-feeding equipment, ash removal equipment, combustion controls, stacks, and chimney, used primarily, but not exclusively, to burn any fuel for the purpose of indirect heating in which the material being heated is not contacted by and adds no substance to the products of combustion.

(ff) "Fugitive Dust" shall mean solid air-borne particulate matter emitted from any source other than a flue or stack.

(gg) "Gasoline" shall mean a petroleum distillate having a Reid vapor pressure of 27.6 kPa (4 psia) or greater and used as a fuel for internal combustion engines.

(hh) "Heat Available" shall mean the aggregate heat content of all fuels whose products of combustion pass through a stack or stacks.

(ii) "Hydrocarbons" shall mean any organic compound of carbon and hydrogen only.

(jj) "Incinerator" shall mean any equipment, device, or contrivance and all appurtenances thereof used for the destruction (by burning) of solid, semi-solid, liquid, or gaseous combustible wastes.

(kk) "Intermediate Vapor Control System" shall mean a vapor control system that employs an intermediate vapor holder to accumulate vapors displaced from tanks during filling. The control device treats the accumulated vapors only during automatically controlled cycles.

(ll) "Loading Rack" shall mean an aggregation or combination of gasoline loading equipment arranged so that all loading outlets in the combination can be connected to a tank truck or trailer parked in a specified loading space.

(mm) "Maximum Process Weight Per Hour" shall mean the equipment manufacturer's or designer's guaranteed maximum (whichever is greater) process weight per hour.

(nn) "Model Year" shall mean the annual production period of new motor vehicles designated by the calendar year in which such period ends, provided that if the manufacturer does not so designate vehicles manufactured by him, the model year with respect to such vehicle shall mean the twelve-month period beginning January 1 of the year specified herein.

(oo) "Modification" shall mean any physical change in, or change in the method of operation of, an affected source which increases the amount of any air contaminant (to which a rule or regulation applies) emitted by such source or which results in the emission of any air contaminant (to which a rule or regulation applies) not previously emitted, except that:

1. Routine maintenance, repair, and replacement shall not be considered physical changes, and

2. The following shall not be considered a change in the method of operation:

(i) An increase in the production rate;

(ii) An increase in hours of operation;

(iii) Use of an alternative fuel or raw material.

(pp) "Motor Vehicle" shall mean every self-propelled device in or upon or by which any person or property is, or may be, transported or drawn upon a public highway.

(qq) "New Source" shall mean any source built or installed on or after the date of initial adoption of an applicable rule or regulation, and any source existing at said stated time which later undergoes modification. Any source moved to another premise involving a change of location after the date of initial adoption of an applicable rule or regulation shall be considered a new source. This definition of new source is not applicable to ADEM Admin. Code rules 335-3-10-.01(3) and 335-3-11-.01(3).

(rr) "Objector" shall mean any person who objects to the granting of a variance pursuant to Section 12(d) of the Act.

(ss) "Odor" shall mean smells or aromas which are unpleasant to persons or which tend to lessen human food and water intake, interfere with sleep, upset appetite, produce irritation of the upper respiratory tract, or cause symptoms or nausea, or which by their inherent chemical or physical nature or method or processing are, or may be, detrimental or dangerous to health. Odor and smell are used interchangeably herein.

(tt) "Opacity" shall mean the degree to which emissions reduce the transmission of light and obscure the view of the background.

(uu) "Open Burning" shall mean the burning of any matter in such a manner that the products of combustion resulting from the burning are emitted directly into the ambient air without passing through an adequate stack, duct, or chimney.

(vv) "Operating Time" shall mean the number of hours per year that a source conducts operations.

(ww) "Organic Material" shall mean a chemical compound of carbon excluding carbon monoxide, carbon dioxide, carbonic acid, metallic carbides or carbonates, and ammonium carbonate.

(xx) "Oven" shall mean a chamber within which heat is used to bake, cure, polymerize, and/or dry a surface coating.

(yy) "Owner or Operator" shall mean any person who owns, leases, operates, controls, or supervises an affected facility, article, machine, equipment, other contrivance, or source.

(zz) "Particulate Matter" shall mean finely divided material, except uncombined water, which is a liquid or solid at the conditions of the applicable test method.

(aaa) "Party" shall mean the petitioner(s) for variance under Section 12 of the Act, the person(s) objecting to the grant of a variance petition under Section 12 of the Act, the alleged violator in the case of a citation issued pursuant to Section 17(e) of the Act, and the State.

(bbb) "Petitioner" shall mean any person who petitions the Commission pursuant to Section 12 of the Act and in accordance with rule 335-3-1-.09 of the Rules and Regulations.

(ccc) "PM_{10}" means particulate matter with an aerodynamic diameter less than or equal to a nominal 10 micrometers as measured by a reference method based on 40 CFR 50, Appendix J, and designated in accordance with 40 CFR 53, or by an equivalent method designated in accordance with 40 CFR 53.

(ddd) "PM_{10} Emission" means finely divided solid or liquid material, with an aerodynamic diameter less than or equal to a nominal 10 micrometers emitted to the ambient air as measured by an applicable reference method, or an equivalent or alternative method, specified in 40 CFR.

(eee) "Prime Coat" shall mean the first film of coating applied in a multiple coat operation.

(fff) "Priority Classification" shall mean Air Quality Control Region Pollutant Priority Classifications set forth in 40 CFR 52.

(ggg) "Process" shall mean any action, operation, or treatment of materials, including handling and storage thereof, which may cause discharge of an air contaminant or contaminants into the atmosphere, but excluding fuel burning and refuse burning.

(hhh) "Process Weight" shall mean the total weight in pounds of all materials introduced into any specific process which may cause any discharge into the atmosphere.

(iii) "Process Weight Per Hour" shall mean the total weight of all materials introduced into any specific process that may cause any discharge of particulate matter. Solid fuels charged will be considered as part of the process weight, but liquid and gaseous fuels and combustion air will not. For a cyclical or batch operation, the process weight per hour will be derived by dividing the total process weight by the number of hours in one complete operation from the beginning of any given process to the completion thereof, excluding any time during which the equipment is idle. For a continuous operation, the process weight per hour will be derived by dividing the process weight for a typical period of time by that time period.

(jjj) "Refuse" shall mean matter consisting of garbage, rubbish, ashes, street debris, dead animals, abandoned vehicles, industrial wastes, demolition wastes, construction wastes, special wastes, or sewage treatment residue.

(kkk) "Reid Vapor Pressure" shall mean a vapor pressure specification for volatile organic crude oil and volatile nonviscous petroleum liquids except liquid petroleum gases as determined by American Society for Testing and Materials. The pressure approximates the absolute vapor pressure of the liquid.

(lll) "Shutdown" shall mean the cessation of operation of affected source or emission control equipment.

(mmm) "Six-Minute Average" shall be determined by calculating the arithmetic mean of twenty-four (24) consecutive opacity observations, taken at intervals of fifteen (15) seconds.

(nnn) "Smoke" shall mean gas-borne particles resulting from incomplete combustion consisting predominantly, but not exclusively, of carbon, ashes, or other combustible materials.

(ooo) "Soiling Index" shall mean a measure of the soiling properties of total suspended particulates in air determined by drawing a measured volume of air through a known area of Whatman No. 4 filter paper for a measured period of time, expressed as COHs/1,000 linear feet.

(ppp) "Solvent" shall mean organic materials which are liquid at standard conditions and which are used as dissolvers, viscosity reducers, or cleaning agents.

(qqq) "Source" shall mean any building, structure, facility, installation,

article, machine, equipment, device, or other contrivance which emits or may emit any air contaminant. Any activity which utilizes abrasives or chemicals for cleaning or any other purpose (such as cleaning the exterior of buildings) which emits air contaminants shall be considered a source.

(rrr) "Stack or Ducts" shall mean any flue, duct, or other contrivance arranged to conduct emissions to the open air.

(sss) "Standard Conditions" shall mean a temperature of 20°C (68°F) and pressure of 760 millimeters of mercury (29.92 inches of mercury).

(ttt) "Startup" shall mean the setting in operation of an affected source for any purpose.

(uuu) "State" shall mean the State of Alabama, the Environmental Management Commission, and the Commission's representatives.

(vvv) "Storage Tank Capacity" shall mean the tank manufacturer's design capacity. Storage tank and storage vessel shall be equivalent in meaning.

(www) "Submerged Fill Pipe" shall mean any fill pipe, the discharge opening of which is entirely submerged when the liquid level is six (6) inches above the bottom of the tank; or when applied to a tank which is loaded from the side, shall mean any fill pipe, of which the top of the discharge opening is not over 18 inches from the bottom of the tank.

(xxx) "Topcoat" shall mean the final film of coating applied in a multiple coat operation.

(yyy) "Total Reduced Sulfur (TRS)" shall mean hydrogen sulfide, mercaptans, dimethyl sulfide, dimethyl disulfide, and any other organic sulfides present.

(zzz) "Total suspended particulate" means particulate matter as measured by the method described in 40 CFR 50, Appendix B.

(aaaa) "Transfer Efficiency (TE)" shall mean the efficiency of a surface coating application system to deposit coating solids on a substrate. The transfer efficiency of an application system is determined by dividing the volume of coating solids deposited on a substrate by the total volume of coating solids used.

(bbbb) "True Vapor Pressure" shall mean the equilibrium partial pressure exerted by a stored petroleum liquid at the temperature equal to the highest calendar-month average of the liquid storage temperature as determined in accordance with methods described in American Petroleum Institute Bulletin 2517, "Evaporation Loss from External Floating Roof Tanks," 1962, Second Edition, February 1980.

(cccc) "Uncombined Water" shall mean any water droplets or water vapor condensate that does not contain any other solid or liquid particulate matter

attached to the water droplets.

(dddd) "Vapor Collection System" shall mean a vapor transport system which uses direct displacement by the liquid loaded to force vapors from the tank into a vapor control system.

(eeee) "Vapor Recovery System" shall mean a system that prevents release to the atmosphere of at least 90 percent by weight of organic compounds in the vapor displaced from a tank during the transfer of gasoline.

(ffff) "Violator" shall mean any person who is issued a citation by the Commission or its authorized agent pursuant to Section 17(e) and (f) of the Act.

(gggg) "Volatile Organic Compounds (VOC)" shall mean any compound of carbon excluding carbon monoxide, carbon dioxide, carbonic acid, metallic carbides or carbonates, and ammonium carbonate, which participates in atmospheric photochemical reactions. This includes any such organic compound **other than the following**:

1. Methane;
2. Ethane;
3. Methyl Chloroform (1,1,1 Trichloroethane);
4. Methylene Chloride (Dichloromethane);
5. CFC-11 (Trichlorofluoromethane);
6. CFC-12 (Dichlorodifluoromethane);
7. HCFC-22 (Chlorodifluoromethane);
8. HFC-23 (Trifluoromethane);
9. CFC-114 (1,2-dichloro-1,1,2,2-Tetrafluoroethane);
10. CFC-115 (Chloropentafluoroethane);
11. HCFC-123 (1,1,1-Trifluoro-2,2-dichloroethane);
12. HCFC-124 (2-Chloro-1,1,1,2-tetrafluoroethane);
13. HFC-125 (Pentafluoroethane);
14. HFC-134 (1,1,2,2-Tetrafluoroethane);
15. HFC-134a (1,1,1,2-Tetrafluoroethane);
16. HCFC-141b (1,1-Dichloro-1-fluoroethane);
17. HCFC-142b (1-Chloro-1,1-difluoroethane);
18. HFC-143a (1,1,1-Trifluoroethane);
19. HFC-152a (1,1-Difluoroethane);
20. CFC-113 (1,1,2-Trichloro-1,2,2-Trifluoroethane);
21. Parachlorobenzotrifluoride (PCBTF);
22. Cyclic, branched, or linear completely methylated siloxanes;
23. Acetone;
24. Perchloroethylene (tetrachloroethylene);
25. HCFC-225ca (3,3-dichloro-1,1,1,2,2-pentafluoropropane);
26. HCFC-225cb (1,3-dichloro-1,1,2,2,3-pentafluoropropane);

27. HFC 43-10mee (1,1,1,2,3,4,4,5,5,5-decafluoropentane);
28. HFC-32 (Difluoromethane);
29. HFC-161 (Ethylfluoride);
30. HFC-236fa (1,1,1,3,3,3-Hexafluoropropane);
31. HFC-245ca (1,1,2,2,3-Pentafluoropropane);
32. HFC-245ea (1,1,2,3,3-Pentafluoropropane);
33. HFC-245eb (1,1,1,2,3-Pentafluoropropane);
34. HFC-245fa (1,1,1,3,3-Pentafluoropropane);
35. HFC-236ea (1,1,1,2,3,3-Hexafluoropropane);
36. HFC-365mfc (1,1,1,3,3-Pentaflurorobutane);
37. HCFC-31 (Chlorofluoromethane);
38. HCFC-123a (1,2-Dichloro-1,1,2-trifluoroethane);
39. HCFC-151a (1-Chloro-1-fluoroethane);
40. $C_4F_9OCH_3$ (1,1,1,2,2,3,3,4,4-Nonafluoro-4-methoxybutane);
41. (CF3)2CFCF2OCH3 (2-(Difluoromethoxymethyl)-1,1,1,2,3,3,3-heptafluoropropane);
42. C4F9OC2H5 (1-Ethoxy-1,1,2,2,3,3,4,4,4-nonafluorobutane);
43. (CF3)2CFCF2OC2H5 (2-(Ethoxydifluoromethyl)-1,1,1,2,3,3,3-heptafluoropropane);
44. Methyl Acetate;
45. HFE-7000, n-C3F7OCH3, (1,1,1,2,2,3,3,-heptafluoro-3 methoxy-propane;
46. HFE-7500 (3-ethoxy-1,1,1,2,3,4,4,5,5,6,6,6-dodecafluoro-2-(trifluoromethyl) hexane;)
47. HFC-227ea (1,1,1,2,3,3,3-heptafluoropropane);
48. methyl formate (HCOOCH3);
49. HFE-7300 (1,1,1,2,2,3,4,5,5,5,-decafluoro-3-methoxy-4-trifluoromethyl-pentane);
50. propylene carbonate;
51. dimethyl carbonate;
52. trans-1,3,3,3-tetrafluoropropene;
53. HFE-134 (HCF_2OCF_2H);
54. HFE-236cal2 ($HCF_2OCF_2OCF_2H$);
55. HFE-338pcc13 ($HCF_2OCF_2CF_2OCF_2H$);
56. H-Galden 1040x or H-Galden ZT130 (or 150 or 180) ($HCF_2OCF_2OCF_2CF_2OCF_2H$);
57. trans 1-chloro-3,3,3-trifluoroprop-1-ene (SolsticeTM 1233zd(E);
58. HFO-1234yf (2,3,3,3-tetrafluoropropene;
59. 2-amino-2-methyl-1-propanol;
60. t-butyl acetate;
61. 1,1,2,2-Tetrafluoro-1-(2,2,2-trifluoroethoxy) ethane;

62. *cis*-1,1,1,4,4,4-hexafluorobut-2-ene (HFO-1336mzz-Z; and

63. Perfluorocarbon compounds which fall into these classes:

(i) Cyclic, branched, or linear, completely fluorinated alkanes;

(ii) Cyclic, branched, or linear, completely fluorinated ethers with no Unsaturations;

(iii) Cyclic, branched, or linear, completely fluorinated tertiary amines with no unsaturations; and

(iv) Sulfur containing perfluorocarbons with no unsaturations and with sulfur bonds only to carbon and fluorine.

(2) The heretofore mentioned excluded organic compounds have been determined to have negligible photochemical reactivity by the EPA Administrator. For purposes of determining compliance with emission limits under chapter 335-3-6, VOC shall be measured by the approved test methods contained in chapter 335-3-6. Where such a method also inadvertently measures the heretofore mentioned negligibly photochemical reactive organic compounds with the reactive organic compounds, an owner or operator may exclude these negligibly reactive compounds when determining compliance with an emission limit using EPA-approved test methods and procedures.

Author: James W. Cooper and John E. Daniel.
Statutory Authority: Code of Alabama 1975, §§22-28-14, 22-22A-5, 22-22A-6, and 22-22A-8.
History: Effective Date: January 18, 1972. **Amended:** Effective Date: September 24, 1974; **Amended:** Effective November 27, 1978; **Amended:** Effective April 3,1979; **Amended:** Effective June 5, 1979; **Amended:** Effective July 26, 1979; **Amended:** Effective June 16, 1988; **Amended:** Effective September 21, 1989; **Amended:** Effective November 1, 1990; **Amended:** Effective October 24, 1991; **Amended:** Effective November 23, 1995; **Amended:** Effective January 5, 1996; **Amended:** Effective November 21, 1996; **Amended:** Effective September 25, 1997; **Amended:** Effective March 27, 1998; **Amended:** Effective November 19, 1998; **Amended:** Effective September 7, 2000; **Amended:** Effective December 12, 2005; **Amended:** Effective January 22, 2008; **Amended:** Effective March 20, 2010; **Amended:** Effective May28, 2013; **Amended:** Effective September 24, 2013; **Amended:** Effective November 24, 2015; **Amended:** Effective June 2, 2017; **Amended:** Filed: February 28, 2020; Effective April 13, 2020.

335-3-1-.03 Ambient Air Quality Standards.

(1) Primary and Secondary Standards. The National Primary Ambient Air Quality Standards and National Secondary Ambient Air Quality Standards and accompanying appendices of reference methods, set forth in 40 CFR 50, as the same may be amended or revised, are hereby incorporated and made a part of these regulations and shall apply throughout the State.

(2) Policy. It is the objective of the Commission to obtain and maintain the ambient air quality standards of this rule in achieving the policy and purpose of the

(3) Act and as required by the Federal Act. The adoption hereby of the National Primary and Secondary Ambient Air Quality Standards shall not be considered in any manner to allow significant deterioration of existing air quality in any portion of the State.

(4) Attainment of Primary Standard. These rules and regulations and the administration of the Division by the Director shall provide for the attainment of the National Primary Ambient Air Quality Standards throughout the State as expeditiously as practicable, but in no case later than three years after the date of initial adoption of these rules and regulations or within the time limits specified by Section 110(a) of the Clean Air Act, as amended (91 Stat. 685), whichever is later.

(5) Attainment of Secondary Standard. To the extent practicable and feasible, these rules and regulations and the administration of the Division by the Director shall strive for the attainment of the National Secondary Ambient Air Quality Standards throughout the State concurrently with the attainment of the National Primary Ambient Air Quality Standard as provided in rule 335-3-1-.03(3).

(6) Effect on Interstate Air Quality Control Regions. The administration of the Division by the Director shall insure that air contaminants emitted within an Alabama portion of an Interstate Air Quality Control Region designated at 40 CFR 81 will not interfere with attainment and maintenance of any National Primary or Secondary Ambient Air Quality Standards in the remaining portion of such region. To this end, the Director is authorized to advise and consult with air pollution control agencies in other states and to enter into cooperative agreements with such agencies to achieve the purposes of this rule.

Author: James W. Cooper and John E. Daniel.
Statutory Authority: Code of Alabama 1975, §§22-28-14, 22-22A-5, 22-22A-6, and 22-22A-8.
History: Effective Date: January 18, 1972.
Amended: November 19, 1998.

335-3-1-.04 Monitoring, Records, and Reporting.

(1) The Director may require the owner or operator of any air contaminant source to establish and maintain such records; make such reports; install, use, and maintain such monitoring equipment or methods; sample such emissions in accordance with such methods at such locations, intervals, and procedures as the Director may prescribe; and provide such periodic emission reports as required in paragraph (2) of this rule below.

(2) Reports. Records and reports as the Director may prescribe on air contaminants or fuel shall be recorded, compiled, and submitted on forms furnished by the Director or when forms are not so furnished, then in formats approved by the Director. These may include but not be limited to any of the following:

(a) Emissions of particulate matter, sulfur dioxide, and oxides of nitrogen shall be expressed as follows: in pounds per hour and pounds per million BTU of

heat input for fuel-burning equipment; in pounds per hour and pounds per 100 pounds of refuse burned for incinerators; and in pounds per hour and in pounds per hourly process weight or production rate or in terms of some other easily measured and meaningful process unit specified by the Director.

(b) Sulfur dioxide and oxides of nitrogen emission data shall be averaged over a 24-hour period and shall be summarized monthly. Daily averaged and monthly summaries shall be submitted to the Director biannually. Data should be calculated daily and available for inspection at any time.

(c) Particulate matter emissions shall be sampled and submitted biannually.

(d) Visible emissions shall be measured continuously, and records kept indicating total minutes per day in which stack discharge effluent exceeds 20 percent opacity. Data should be summarized monthly and submitted monthly and biannually. Current daily results shall be available for inspection at any time.

(e) The sulfur content of fuels, as burned, except natural gas, shall be determined in accordance with current recognized ASTM procedures. Averages for periods prescribed by the Director shall be submitted biannually. Records shall be kept current and be available for inspection.

Author: James W. Cooper and John E. Daniel.
Statutory Authority: Code of Alabama 1975, §§22-28-14, 22-22A-5, 22-22A-6, and 22-22A-8.
History: Effective Date: January 18, 1972.
Amended: November 21, 1996.

335-3-1-.05 Sampling and Testing Methods.

(1) Methods. All required sampling and testing shall be made and the results calculated in accordance with sampling testing procedures and methods approved by the Director. All required samples and tests shall be made under the direction of persons qualified by training and/or experience in the field of air pollution control.

(2) Standard Methods. The Director, to the extent practicable, should recognize and approve the test methods and procedures established by 40 CFR, as the same may be amended or revised.

(3) The Division may conduct tests and take samples of air contaminants, fuel, process material, or other material which affects or may affect emission of air contaminants from any source. Upon request of the Division, the person responsible for the source to be tested shall provide necessary holes in stacks or ducts and such other safe and proper sampling and testing facilities exclusive of instruments and sensing devices as may be necessary for proper determination of

the emission of air contaminants. If an authorized employee of the Division during the course of an inspection obtains a sample of air contaminant, fuel, process material, or other material, he shall give the owner or operator of the equipment or fuel facility a receipt for the sample obtained.

(4) Report to Owner or Operator. At the conclusion of any inspection under Section 9 of the Act or conduction of any testing or sampling under this Part, if requested, the owner or operator of the premises shall receive a report setting forth all facts found which relate to compliance status with the Act and these rules and regulations.

Author: James W. Cooper and John E. Daniel.
Statutory Authority: Code of Alabama 1975, §§22-28-14, 22-22A-5, 22-22A-6, and 22-22A-8.
History: Effective Date: January 18, 1972.
Amended:

335-3-1-.06 Compliance Schedule.

(1) Scope. Except as otherwise specified, compliance with the provisions of these rules and regulations shall be according to the time schedule of this rule.

(2) New Sources. All new sources shall comply with the applicable rules and regulations of chapter 335-3-3 et seq. within 60 days after achieving the maximum production rate at which the affected source will be operated, but not later than 120 days after initial startup of such source, unless the Director specifies another period of time as a condition to the issuance of any Permit under chapter 335-3-14.

(3) Existing Sources. All existing sources not in compliance as of the date of initial adoption of an applicable rule or regulation contained in chapter 335-3-3 et seq. shall be in compliance within six (6) months of such initial date unless the owner or operator responsible for the operation of such source shall have submitted to the Director in a form and manner satisfactory to him, a control plan and schedule for achieving compliance, such plan and schedule to contain a date on or before which full compliance will be attained and such other information as the Director may require. Any such plan and schedule expected to extend over a period of eighteen (18) or more months from such initial date shall include provisions for periodic increments of progress toward full compliance. If approved by the Director, such dates shall be the dates on which said owner or operator shall achieve incremental progress and full compliance. The Director may require persons to submit subsequent periodic reports on progress in achieving compliance. In no event shall the control plan and schedule exceed three (3) years from the date of initial adoption of an applicable rule or regulation. The provisions of this paragraph shall not apply to sources for which permits are required under chapter 335-3-14.

(4) Nothing in this rule shall relieve any person or any new or existing source from complying with the provisions of chapters 335-3-1 and 335-3-2 of

these rules and regulations.

Author: James W. Cooper and John E. Daniel.
Statutory Authority: Code of Alabama 1975, §§22-28-14, 22-22A-5, 22-22A-6, and 22-22A-8.
History: Effective Date: January 18, 1972.
Amended:

335-3-1-.07 Maintenance and Malfunctioning of Equipment; Reporting.

(1) Maintenance; Reporting. In the case of shutdown of air pollution control equipment (which operates pursuant to any permit issued by the Director) for necessary scheduled maintenance, the intent to shut down such equipment shall be reported to the Director at least twenty-four (24) hours prior to the planned shutdown, unless such shutdown is accompanied by the shutdown of the source which such equipment is intended to control. Such prior notice shall include, but is not limited to the following:

(a) Identification of the specific facility to be taken out of service as well as its location and permit number;

(b) The expected length of time that the air pollution control equipment will be out of service;

(c) The nature and quantity of emissions of air contaminants likely to occur during the shutdown period;

(d) Measures such as the use of off-shift labor and equipment that will be taken to minimize the length of the shutdown period;

(e) The reasons that it would be impossible or impractical to shut down the source operation during the maintenance period.

(2) Malfunction; Reporting. In the event that any emission source, air pollution control equipment, or related facility fails or breaks down in such a manner as to cause the emission of air contaminants in violation of these rules and regulations, the person responsible for such source, equipment, or facility shall notify the Director within twenty-four (24) hours of such failure or breakdown and provide a statement giving all pertinent facts, including the estimated duration of the breakdown. The Director shall be notified when the condition causing the failure or breakdown has been corrected and such source, equipment, or facility is again in operation.

Author: James W. Cooper and John E. Daniel.
Statutory Authority: Code of Alabama 1975, §§22-28-14, 22-22A-5, 22-22A-6, and 22-22A-8.
History: Effective Date: January 18, 1972.
Amended:

335-3-1-.08 Prohibition of Air Pollution. No person shall permit or cause air pollution, as defined in rule 335-3-1-.02(1)(e) of this chapter by the discharge of any air contaminant for which no ambient air quality standards have been set under rule 335-3-1-.03(1).

Author: James W. Cooper and John E. Daniel.
Statutory Authority: Code of Alabama 1975, §§22-28-14, 22-22A-5, 22-22A-6, and 22-22A-8.
History: Effective Date: January 18, 1972.
Amended: November 21, 1996; September 7, 2000.

335-3-1-.09 Variances.

(1) Petition Procedures.

(a) Any person subject to any rule or regulation, requirement or order, may petition the Commission for a variance from the application thereof as prescribed by the Act. A petition for a variance must state the following:

1. The name, address, and telephone number of the petitioner, or other person authorized to receive service of notices.

2. Whether the petitioner is an individual, partnership, corporation or other entity, and names and addresses of the partners, if a partnership, and names and addresses of the officers, if a corporation, and names and addresses of the persons in control, if other entity.

3. The type of business or activity involved in the application and the street address at which it is conducted.

4. A brief description of the article, machine, equipment, or other contrivance, if any, involved in the petition.

5. The signature of the petitioner or that of some person on his behalf, and, where the person signing is not the petitioner, the authority to sign.

6. The rule or regulations, requirement or order from which a variance is requested.

7. The facts showing why compliance with such rule or regulation, requirement or order would impose serious hardship on the petitioner or on any other person or persons without equal or greater benefits to the public.

8. The facts showing why the emissions occurring or proposed to occur do not endanger or tend to endanger human health or safety, human comfort, and aesthetic values.

9. For what period of time the variance is sought and why.

10. Provisions of the rule or regulation, requirement or order which the

petitioner can meet and the date when petitioner can comply with such provisions.

11. Whether or not any case involving the same identical equipment or process identified in subparagraph (a)4. of this paragraph above is pending in any court, civil or criminal.

(b) All petitions shall be typewritten, double spaced, on legal or letter size paper, on one side of the paper only.

(2) Failure to Comply with Procedures.

(a) The Director shall not accept for filing any petition which does not comply with these rules and regulations relating to the form, filing, and service of petitions unless the Chairman or any two members of the Commission direct otherwise and confirm such direction in writing. Such direction need not be made at a meeting of the Commission.

(b) The Chairman or any two members, without a meeting, may require the petitioner to state further facts or reframe a petition so as to disclose clearly the issues involved.

(3) Objection Procedures.

(a) A person may file a written objection to the grant of a variance within twenty-one (21) days from initial advertised notice and thus insure that a public hearing will be held, according to Section 12(d) of Act. An objection to the grant of a variance must state:

1. The objector's name, address, and telephone number.

2. Whether the objector is an individual, partnership, corporation, or other entity, and names and addresses of the partners, if a partnership, names and addresses of the officer, if a corporation, and the names and addresses of the persons in control, if other entity.

3. A specification of which petition for a variance is being objected to.

4. A statement indicating why the objector believes that the variance should not be granted.

(b) All objections should be typewritten or carefully printed in ink on legal or letter size paper.

Author: James W. Cooper and John E. Daniel.
Statutory Authority: Code of Alabama 1975, §§22-28-14, 22-22A-5, 22-22A-6, and 22-22A-8.
History: Effective Date: January 18, 1972.
Amended: September 24, 1974; November 21, 1996.

335-3-1-.10 Circumvention. No person shall cause or permit the installation or use of any device or any means which, without resulting in reduction in the total amount of air contaminant emitted, conceals or dilutes any emission of air contaminant which would otherwise violate these rules and regulations.

Author: James W. Cooper and John E. Daniel.
Statutory Authority: Code of Alabama 1975, §§22-28-14, 22-22A-5, 22-22A-6, and 22-22A-8.
History: Effective Date: January 18, 1972.
Amended: September 24, 1974.

335-3-1-.11 Severability. The provisions of these rules and regulations and the various applications thereof are declared to be severable and if any chapter, rule, paragraph, subparagraph, clause, or phrase of these rules and regulations shall be adjudged to be invalid or unconstitutional by any court of competent jurisdiction, the judgment shall not affect, impair, or invalidate the remainder of these rules and regulations, but shall be confined in its operation to the chapter, rule, paragraph, subparagraph, clause, or phrase of these rules and regulations that shall be directly involved in the controversy in which such judgment shall have been rendered.

Author: James W. Cooper and John E. Daniel.
Statutory Authority: Code of Alabama 1975, §§22-28-14, 22-22A-5, 22-22A-6, and 22-22A-8.
History: Effective Date: January 18, 1972.
Amended: September 24, 1974; November 21, 1996.

335-3-1-.12 Bubble Provision.

(1) Notwithstanding the specific emission limitations contained in chapters 335-3-3, 335-3-4, 335-3-5, 335-3-7, and 335-3-8, the Director may allow a facility to reduce the level of control required at one source in exchange for an equal increase in the level of control required at another source. Approval of any such exchange shall not be granted unless it is consistent with the requirements of Federal and State law.

(2) Any such approval granted will not be effective until it becomes a part of the approved State Implementation Plan.

Author: Richard E. Grusnick.
Statutory Authority: Code of Alabama 1975, §§22-28-14, 22-22A-5, 22-22A-6, and 22-22A-8.
History: Effective Date: April 3, 1979.
Amended:

335-3-1-.13 Credible Evidence.

(1) Compliance Certification. Notwithstanding any other provision in ADEM Admin. Code division 3, an owner or operator may use any credible evidence or information relevant to whether a source would have been in compliance with applicable requirements if the appropriate performance or compliance test had been performed, for the purpose of submitting compliance certifications.

(2) Enforcement. Notwithstanding any other provision in ADEM Admin. Code division 3, any credible evidence or information relevant to whether a source would have been in compliance with applicable requirements if the appropriate performance or compliance test had been performed, can be used to establish whether or not an owner or operator has violated or is in violation of any rule or standard in this division.

Author: Ronald W. Gore.
Statutory Authority: Code of Alabama 1975, §§22-28-14, 22-22A-5, 22-22A-6, and 22-22A-8.
History: Effective Date: May 20, 1999.
Amended:

335-3-1-.14 [Repealed February 20, 2015] Reserved

335-3-1-.15 Emissions Inventory Reporting Requirements.

(1) General. The requirements of this rule serve to establish reporting requirements from point sources in order to meet the statewide emissions inventory reporting requirements under 40 CFR 51, Appendix A, as required by §§ 110(p) and 110(a)(2)(F)(ii) of the Clean Air Act, as amended.

(2) Definitions. For the purpose of this rule, the definitions in 40 CFR 51, Appendix A shall apply unless defined under this paragraph.

(a) "Point Source" means:

1. A plant or facility which has one or more non-mobile or stationary sources;

2. "Type A source" means large point sources with actual annual emissions greater than or equal to any of the emissions thresholds listed in subparagraphs (a)2.(i) through (a)2.(vii) below.

(i) ≥ 2,500 TPY Sulfur oxides.

(ii) ≥ 250 TPY VOC.

(iii) ≥ 2,500 TPY NOx.

(iv) ≥ 2,500 TPY CO.

(v) ≥ 250 TPY PM_{10}.

(vi) ≥ 250 TPY $PM_{2.5}$.

(vii) ≥ 250 TPY NH_3.

3. "Type B source" means any point source with potential annual emissions greater than or equal to any of the emissions thresholds listed in subparagraphs (a)3.(i) through (a)3.(viii) below.

(i) ≥ 100 TPY Sulfur oxides.

(ii) ≥ 100 TPY VOC.

(iii) ≥ 100 TPY NOx.

(iv) ≥ 1,000 TPY CO. If the source is located in an ozone nonattainment area, then the threshold is ≥ 100 TPY.

(v) ≥ 5 TPY Lead.

(vi) ≥ 100 TPY PM_{10}.

(vii) ≥ 100 TPY $PM_{2.5}$.

(viii) ≥ 100 TPY NH_3.

(b) "Potential to Emit" shall have the same meaning ascribed in chapters 335-3-14 and 335-3-16 of this division.

(3) Applicability. This rule applies to all owners or operators of point sources in the State.

(4) Reporting requirements.

(a) The owner or operator of a point source shall submit emissions inventory data as follows:

1. Annual reporting. Beginning with emission year 2002 and every year thereafter, for each owner or operator of a Type A source, the data specified in 40 CFR 51, Appendix A, Table 2A must be submitted to the Department by June 30 of the calendar year following the emission year being reported.

2. Triennial reporting. For each owner or operator of a Type B source, beginning with emission year 2002 and every third year thereafter, the data specified in 40 CFR 51, Appendix A, Table 2A must be submitted to the Department by June 30 of the calendar year following the emission year being

reported.

(b) The data required under subparagraph (a) of this paragraph shall be submitted electronically to the Department in a format prescribed and provided by the Department.

Author: Ronald W. Gore.
Statutory Authority: Code of Alabama 1975, §§22-28-10, 22-28-14, 22-28-18, 22-28-20, 22-22A-5, 22-22A-6, and 22-22A-8.
History: Effective Date: April 3, 2003.
Amended:

335-3-1-.16 [Repealed February 20, 2015] Reserved

ALABAMA DEPARTMENT OF ENVIRONMENTAL MANAGEMENT AIR DIVISION - AIR POLLUTION CONTROL PROGRAM

CHAPTER 335-3-2
AIR POLLUTION EMERGENCY

TABLE OF CONTENTS

335-3-2-.01 Air Pollution Emergency
335-3-2-.02 Episode Criteria
335-3-2-.03 Special Episode Criteria
335-3-2-.04 Emission Reduction Plans
335-3-2-.05 Two Contaminant Episode
335-3-2-.06 General Episodes
335-3-2-.07 Local Episodes
335-3-2-.08 Other Sources
335-3-2-.09 Other Authority Not Affected

335-3-2-.01 Air Pollution Emergency. The Director is authorized and empowered to enforce or require enforcement of any provisions of this chapter throughout the State of Alabama.

Author: James W. Cooper and John E. Daniel.
Statutory Authority: Code of Alabama 1975, §§22-28-14, 22-22A-5, 22-22A-6, and 22-22A-8.
History: Effective Date: January 18, 1972.
Amended:

335-3-2-.02 Episode Criteria. When the Director determines that conditions justify the proclamation of an air pollution episode stage, due to the accumulation of air contaminants in any place within the State, attaining levels which could, if sustained or exceeded, lead to a substantial threat to the health of persons, he shall be guided by the following criteria:

(a) Episode stages shall be determined and declared upon the basis of average concentrations recorded at any monitoring station in the State.

(b) If contamination and meteorology warrant, any advanced episode stage may be declared by the Director without first declaring a lesser degree of Alert or Watch. The Director shall, at his discretion, declare a lesser stage, the termination or the continuance of the advanced episode stage during such times when contamination and meteorological conditions moderate significantly after an advanced episode stage has been declared.

(c) Episode Watch. The Director shall declare an Episode Watch when one or more of the following events takes place:

1. An Atmospheric Stagnation Advisory is issued by the National Weather Service, stating that atmospheric conditions marked by a slow moving

high pressure system, light winds, and temperature inversions are expected to affect the State of Alabama or portions thereof for the next thirty-six (36) hours.

2. A forecast by local meteorologist that stagnant atmospheric conditions as described above could result in high air pollution levels in Alabama or portions thereof.

3. Validated reports of abnormally high air pollution measurements, specifically, reaching or exceeding fifty percent (50%) of the Alert level of paragraph (4) of this rule for at least three (3) consecutive hours at a given locality in the State.

(d) Alert. The Director shall declare an Alert when any one of the following contaminant concentrations is measured at any monitoring site and when adverse meteorological conditions can be expected to remain at these levels or higher for the next twelve (12) hours or more unless control measures are taken:

1. Sulfur Dioxide. Measured by a continuous reference method analyzer or equivalent.

24-hour average, 0.30 ppm (800 μg/m³)

2. PM_{10}. Measured by a PM_{10} sampler, 24 hour accumulation.

24 hour average, 350 μg/m³

3. Carbon Monoxide. Measured by a continuous reference method analyzer or equivalent.

8-hour average, 15 ppm (17 mg/m³)

4. Nitrogen Dioxide. Measured by a continuous reference method analyzer or equivalent.

24-hour average, 0.15 ppm (282 μg/m³)

or 1-hour average, 0.6 ppm (1130 μg/m³)

5. Ozone. Measured by a continuous reference method analyzer or equivalent.

1-hour average, 0.15 ppm (295 μg/m³)

(e) Warning. A Warning shall be declared by the Director when the concentrations of any of the following air contaminants measured at any monitoring site reach the following levels, and when adverse meteorological

conditions can be expected to remain at these levels or higher for the next 12 hours or more unless control measures are taken:

1. Sulfur Dioxide. Measured by a continuous reference method analyzer or equivalent.

24-hour average, 0.6 ppm (1600 μg/m³)

2. PM_{10}. Measured by a PM_{10} sampler, 24 hour accumulation.

24-hour average, 420 μg/m³

3. Carbon Monoxide. Measured by a continuous reference method analyzer or equivalent.

8-hour average, 30 ppm (34 mg/m³)

4. Nitrogen Dioxide. Measured by a continuous reference method analyzer or equivalent.

24-hour average, 0.30 ppm (565 μg/m³)

1-hour average, 1.20 ppm (2260 μg/m³)

5. Ozone. Measured by a continuous reference method analyzer or equivalent.

1-hour average, 0.40 ppm (800 μg/m³)

(f) Emergency. An Emergency shall be declared by the Director when the following concentrations of air contaminants have been reached or when meteorological conditions can be expected to reach or exceed these levels at any monitoring site in the State for a period of twelve (12) hours or more unless control actions are taken:

1. Sulfur Dioxide. Measured by a continuous reference method analyzer or equivalent.

24-hour average, 0.8 ppm (2100 μg/m³)

2. PM_{10}. Measured by a PM_{10} sampler, 24-hour accumulation.

24-hour average, 500 μg/m³

3. Carbon Monoxide. Measured by a continuous reference method analyzer or equivalent.

8-hour average, 40 ppm (46 mg/m³)

4. Nitrogen Dioxide. Measured by a continuous reference method analyzer or equivalent.

24-hour average, 0.40 ppm (750 μg/m³)

1-hour average, 1.60 ppm (3000 μg/m³)

5. Ozone. Measured by a continuous reference method analyzer or equivalent.

1-hour average, 0.50 ppm (1000 μg/m³)[1]

(g) Termination.

1. The status reached by application of the Episode Criteria of this rule shall remain in effect until the criteria for that level is no longer met. At such time, the next lower status will be assumed and such changes declared by the Director. Specifically:

(i) When ambient contaminant concentrations fall below the critical levels for the stage, and a downward trend of concentrations is established; and

(ii) When meteorological conditions that attended the high concentrations are no longer called for in official weather predictions.

2. A public declaration will take on one of the following forms:

(i) Terminate "Emergency Status", resume "Warning Status" or "Alert Status", whichever is appropriate;

(ii) Terminate "Warning Status", resume "Alert Status", or stage;

(iii) Terminate "Episode Status".

3. Upon termination of an "Episode Status", the Air Division will remain on internal "Episode Watch" until a return to normal operation is announced by the Director.

(h) Status Declaration Authority. The Director of the Alabama Department of Environmental Management, or his duly authorized agent, shall have the authority to make an announcement of internal Episode Watch and public declarations of Alert, Warning, and Emergency Status.

Author: James W. Cooper and John E. Daniel.
Statutory Authority: Code of Alabama 1975, §§22-28-14, 22-22A-5, 22-22A-6, and 22-22A-8.
History: Effective Date: January 18, 1972.
Amended: November 21, 1996; September 7, 2000.

[1] (Revised March 30, 1976)

335-3-2-.03 Special Episode Criteria.

(1) The Director shall have the authority to declare episodic conditions when the atmospheric concentration of a single contaminant or that of a specific locality within the State show elevated concentrations.

(2) Specific Pollutant Situation. When concentrations of one or two contaminants reach or exceed the defined criteria levels, and concentration of other contaminants remain substantially below 50 percent of Alert levels, and meteorological conditions are such that these specific contaminant concentrations can be expected to remain at the above levels for 12 hours or more or increase unless control action is taken, a Specific Alert, Warning, or Emergency Status shall be declared by the Director, naming the contaminants that meet the respective criteria. In such instances when two such contaminants meet different criteria, the Director shall declare the status for the episode having the higher level and that an Episode Watch is being maintained on the remaining contaminant.

(3) Specific Locality Situation. When high concentrations of one or more contaminants are measured at one monitoring site and not others and the effect is judged to originate from an identifiable source near the given site, the Director shall declare the appropriate local Alert, Warning, or Emergency Status for the delineated area and that an Episode Watch is in effect for any remaining portion of the jurisdictional area while meteorological conditions favor the maintenance or increase of said high concentration for at least twelve (12) hours or more unless control action is taken.

Author: James W. Cooper and John E. Daniel.
Statutory Authority: Code of Alabama 1975, §§22-28-14, 22-22A-5, 22-22A-6, and 22-22A-8.
History: Effective Date: January 18, 1972.
Amended:

335-3-2-.04 Emission Reduction Plans. Upon declaring an Episode Watch, Alert, Warning, or Emergency, the Director shall order persons responsible for the operation of a source of air contaminants causing or contributing to such episode to take the general measures outlined in the Emergency Episode Plan for the State of Alabama (dated November 1971, prepared by TRW, Inc.) or revision thereof, as he deems appropriate, in addition to all specific source curtailments designated by him.

Author: James W. Cooper and John E. Daniel.
Statutory Authority: Code of Alabama 1975, §§22-28-14, 22-22A-5, 22-22A-6, and 22-22A-8.
History: Effective Date: January 18, 1972.
Amended:

335-3-2-.05 Two Contaminant Episode. The Director shall declare an Alert, Warning, or Emergency Status specific for two contaminants when the ambient concentrations of two contaminants simultaneously reach or exceed their respective Episode Criteria of this chapter and meteorological conditions or such that contaminant concentrations can be expected to remain at those criteria levels for twelve (12) or more hours or increase unless control actions are taken. When criteria levels correspond to different episode status for two contaminants, the Director shall declare the status of the higher of the two.

Author: James W. Cooper and John E. Daniel.
Statutory Authority: Code of Alabama 1975, §§22-28-14, 22-22A-5, 22-22A-6, and 22-22A-8.
History: Effective Date: January 18, 1972.
Amended:

335-3-2-.06 General Episodes. The Director shall, in the event that ambient concentrations of three (3) or more contaminants simultaneously reach or exceed their respective Episode Criteria and no improvements in meteorological conditions are forecast for the next twelve (12) hours, declare a General Alert, Warning, or Emergency Status. In the event that criteria levels correspond to different statuses for each contaminant, the Director shall declare a general status corresponding to the highest individual status.

Author: James W. Cooper and John E. Daniel.
Statutory Authority: Code of Alabama 1975, §§22-28-14, 22-22A-5, 22-22A-6, and 22-22A-8.
History: Effective Date: January 18, 1972.
Amended:

335-3-2-.07 Local Episodes.

(1) The Director shall specify the area of the State affected when a Local Alert, Warning, or Emergency Status is declared or when an Accidental Episode for common contaminants occurs, based upon air quality and meteorological reports and predictions.

(2) When the Director declares such a local episode, any person responsible for the operation from which excess emissions result shall shut down such an operation and make repairs or alter the process as required by the Director to restore normal operations.

(3) When the Director declares that a Local Alert, Warning, or Emergency Status is in effect for a delineated area, corresponding general measures shall be applied as detailed in rule 335-3-2-.04, depending upon which contaminant(s) is/are being emitted in excess.

Author: James W. Cooper and John E. Daniel.
Statutory Authority: Code of Alabama 1975, §§22-28-14, 22-22A-5, 22-22A-6, and 22-22A-8.
History: Effective Date: January 18, 1972.
Amended:

335-3-2-.08 Other Sources.

(1) Any person responsible for the operation of a source of air contaminants as determined by the Director shall prepare standby plans for reducing the emissions of air contaminants during periods of an Episode Alert, Warning, and Emergency. Standby plans shall be designed to reduce or eliminate emissions of air contaminants in accordance with the objectives set forth in rule 335-3-2-.04.

(2) Any person responsible for the operation of a source of air contaminants not designated by the Director shall, when requested in writing by the Director, prepare standby plans for reducing the emission of air contaminants during periods of Episode Alert, Warning, and Emergency. Standby plans shall be designed to reduce or eliminate emissions for air contaminants in accordance with the objectives set forth in rule 335-3-2-.04.

(3) Standby plans as required under paragraph (1) of this rule shall be in writing and identify the sources of air contaminants, the amount of reduction of contaminants, and a brief description of the manner in which reduction will be achieved during Episodes of Alert, Warning, and Emergency.

(4) During Episodes of Alert, Warning, and Emergency Status, standby plans as required by this chapter shall be made available on the premises to any person authorized to enforce the provisions of applicable rules and regulations.

(5) Standby plans as required by this chapter shall be submitted to the Director upon request within thirty (30) days of the receipt of such request; such standby plans shall be subject to review and approval by the Director. If, in the opinion of the Director, a standby plan does not effectively carry out the objectives as set forth in these rules and regulations, the Director may disapprove it, state the reason for disapproval, and order the preparation of an amended standby plan within the time period specified in the order.

Author: James W. Cooper and John E. Daniel.
Statutory Authority: Code of Alabama 1975, §§22-28-14, 22-22A-5, 22-22A-6, and 22-22A-8.
History: Effective Date: January 18, 1972.
Amended: July 26, 1972; November 21, 1996

335-3-2-.09 **Other Authority Not Affected**. The provisions of this chapter shall in no way affect the power and authority of the Governor, Chairman, or Director as they pertain to Emergency Procedures as provided in Section 11 of the Act.

Author: James W. Cooper and John E. Daniel.
Statutory Authority: Code of Alabama 1975, §§22-28-14, 22-22A-5, 22-22A-6, and 22-22A-8.
History: Effective Date: January 18, 1972.
Amended:

ALABAMA DEPARTMENT OF ENVIRONMENTAL MANAGEMENT
AIR DIVISION - AIR POLLUTION CONTROL PROGRAM

CHAPTER 335-3-3
CONTROL OF OPEN BURNING AND INCINERATION

TABLE OF CONTENTS

335-3-3-.01 Open Burning
335-3-3-.02 Incinerators
335-3-3-.03 Incineration of Wood, Peanut, and Cotton Ginning Wastes
335-3-3-.04 Incineration of Hospital/Medical/Infectious Waste
335-3-3-.05 Incineration of Commercial and Industrial Solid Waste

335-3-3-.01 Open Burning.

(1) No person shall ignite, cause to be ignited, permit to be ignited, or maintain any open fire except as follows:

(a) Open fires for the cooking of food for human consumption on other than commercial premises;

(b) Fires for recreational or ceremonial purposes;

(c) Fires to abate a fire hazard, providing the hazard is so declared by the fire department or fire district having jurisdiction;

(d) Fires for prevention or control of disease or pests;

(e) Fires for training personnel in the methods of fighting fires, provided that all requirements of ADEM Admin. Code r. 335-3-11-.02(12) are met;

(f) Fires for the disposal of dangerous materials where there is no practical alternate method of disposal and burning is approved by the Director;

(g) Fires set for recognized agricultural, silvicultural, range, and wildlife management practices;

(h) Fires set in salamanders or other devices, utilizing only wood, vegetation, coal, propane, kerosene, fuel oil or used oil (used oil as defined in ADEM Admin. Code chapter 335-14-17) as fuel, and used by construction or other workers for heating purposes;

(i) Open fires specifically or expressly approved by the Director.

(2) Open burning may also be conducted for the purposes listed below and if it meets all the requirements of this paragraph. Authority to conduct open burning under the provisions of this paragraph does not exempt or excuse a person from the consequences, damages, or injuries which may result from such conduct, nor does it exempt or excuse a person from complying with all applicable laws,

ordinances, regulations, and orders of governmental entities having jurisdiction, even though the open burning is conducted as specified in this paragraph.

(a) Open burning of vegetation or untreated wood may be conducted if it is generated by clearing or maintaining land, or from demolition or operations conducted for any of the following purposes:

1. Erection of any structure;

2. Construction of any transportation, utility, or communications line;

3. Maintenance of rights-of-way;

4. Development or modification of a recreational or commercial area;

5. Plant husbandry practices.

(b) Open burning authorized by this paragraph shall comply with the following conditions:

1. The burning must take place on the property on which the combustible fuel originates;

2. The location of the burning must be at least 500 feet from the nearest occupied dwelling other than a dwelling located on the property on which the burning is conducted;

3. The burning must be controlled so as to avoid creating a traffic hazard on any public road, street, or highway as a result of the air contaminants emitted;

4. Only vegetation and untreated wood may be burned. It is unauthorized to open burn heavy oils, asphalt products, plastics, vinyl materials, insulation, paper, cardboard, natural or synthetic rubber, salvage or scrap materials, chemicals, garbage, treated or painted wood, or any trash;

5. Initial burning may be commenced only between the hours of 8:00 a.m. and 3:00 p.m. No combustible material is to be added to the fire between 3:00p.m. and 8:00 a.m. the following day;

6. Burning shall be conducted only when there is good ventilation and when the prevailing wind direction is away from any built-up area in the vicinity. No burning shall be conducted in areas under a current air stagnation advisory issued by the National Weather Service or during a "Drought Emergency" declared by the Governor;

7. The fire shall be attended at all times.

(c) The Director or his authorized representative may impose additional conditions to cover specific open burning situations where additional controls or requirements are deemed necessary to minimize air pollution.

(d) Permission to open burn under the provisions of this paragraph is

revoked during the months of May, June, July, August, September, and October in Baldwin, DeKalb, Etowah, Jefferson, Lawrence, Madison, Mobile, Montgomery, Morgan, Shelby, Russell, and Talladega Counties.

Author: James W. Cooper and John E. Daniel; Ronald W. Gore.
Statutory Authority: Code of Alabama 1975, §§22-28-14, 22-22A-5, 22-22A-6, and 22-22A-8.
History: Effective Date: January 18, 1972.
Amended: November 21, 1996; September 25, 1997; September 7, 2000; April 3, 2003; October 2, 2003; March 22, 2005; April 4, 2006; January 22, 2008.

335-3-3-.02 Incinerators.

(1) The provisions of this rule are applicable to any incinerator except as provided in rule 335-3-3-.03 and rule 335-3-3-.04.

(2) Incinerators shall be designed and operated in such manner as is necessary to prevent the emission of objectionable odors.

(3) No person shall cause or permit to be emitted into the open air from any incinerator, Particulate Matter in the exhaust gases to exceed 0.20 pounds per 100 pounds of refuse charged; provided that: for incinerators of more than 50 tons per day charging rate, Particulate Matter in the exhaust gases may not exceed 0.10 pounds per 100 pounds of refuse charged.

(4) Emission tests shall be conducted at maximum burning capacity of the incinerator.

(5) The burning capacity of an incinerator shall be the manufacturer's or designer's guaranteed maximum rate or such other rate as may be determined by the Director in accordance with good engineering practices. In cases of conflict, the determination made by the Director shall govern.

(6) For the purposes of this rule, the total of the capacities of all furnaces within one system shall be considered as the incinerator capacity.

Author: James W. Cooper and John E. Daniel.
Statutory Authority: Code of Alabama 1975, §§22-28-14, 22-22A-5, 22-22A-6, and 22-22A-8.
History: Effective Date: January 18, 1972.
Amended: Effective Date: July 26, 1972; September 19, 1991.

335-3-3-.03 Incineration of Wood, Peanut, and Cotton Ginning Wastes.

(1) No person shall cause or permit to be emitted into the open air from any incinerator which incinerates wood, peanut, or cotton ginning wastes, Particulate Matter in the exhaust gases to exceed 0.40 pounds per 100 pounds of materials charged.

(2) Emission tests shall be conducted at maximum burning capacity of the incinerator.

(3) The burning capacity of an incinerator shall be the manufacturer's or designer's guaranteed maximum rate or such other rate as may be determined by the Director in accordance with good engineering practices. In case of conflict, the determination made by the Director shall govern.

(4) Each incinerator subject to this rule shall be properly designed, equipped, and maintained for its maximum burning capacity and shall be equipped with a temperature recorder which shall be operated continuously with the incinerator; and the temperature records shall be made available for inspection at the request of the Director and shall either:

(a) be equipped with an underfire forced air system, which shall be electronically controlled to insure that optimum temperature range for the complete combustion of the amount and type of material waste being charged into the incinerator, and a variable damper, or

(b) consist of an all-metal shell with refractory lining, circular furnace, and a built-in cinder catching system for either reburning or other disposition; all primary combustion air shall be supplied under pressure through nozzle openings located around the periphery of the lower furnace; over-fire air shall be provided under pressure through ports which shall be directed downward and tangentially in the same direction as the primary air; cinder collection shall be accomplished by the provision of openings through the shell located above the furnace section.

(5) Each incinerator subject to this rule shall be properly designed, equipped, and maintained for its maximum rated burning capacity and shall be equipped with an underfire forced air system, an over-fire air recirculation secondary combustion system, and variable control damper, all of which shall be electronically controlled to insure the optimum temperature range for the complete combustion of the amount and type of material waste being charged into the incinerator. Each such incinerator shall be equipped with a temperature recorder which shall be operated continuously with the incinerator, and the temperature records shall be made available for inspection at the request of the Director.

Author: James W. Cooper and John E. Daniel.
Statutory Authority: Code of Alabama 1975, §§22-28-14, 22-22A-5, 22-22A-6, and 22-22A-8.
History: Effective Date: January 18, 1972.
Amended: Effective Date: July 26, 1972.

335-3-3-.04 Incineration of Hospital/Medical/Infectious/ Waste.

(1) For the purpose of this rule, the following definitions apply:

(a) "Batch HMIWI" means an HMIWI that is designed such that neither waste charging nor ash removal can occur during combustion.

(b) "Biologicals" means preparations made from living organisms and their products, including vaccines, cultures, etc., intended for use in diagnosing, immunizing, or treating humans or animals or in research pertaining thereto.

(c) "Blood Products" means any product derived from human blood, including but not limited to blood plasma, platelets, red or white blood corpuscles, and other derived licensed products, such as interferon, etc.

(d) "Body Fluids" means liquid emanating or derived from humans and limited to blood; dialysate; amniotic, cerebrospinal, synovial, pleural, peritoneal and pericardial fluids; and semen and vaginal secretions.

(e) "Bypass stack" means a device used for discharging combustion gases to avoid severe damage to the air pollution control device or other equipment.

(f) "Chemotherapeutic waste" means waste material resulting from the production or use of antineoplastic agents used for the purpose of stopping or reversing the growth of malignant cells.

(g) "Co-fired combustor" means a unit combusting hospital waste and/or medical/infectious waste with other fuels or wastes (e.g., coal, municipal solid waste) and subject to an enforceable requirement limiting the unit to combusting a fuel feed stream, 10 percent or less of the weight of which is comprised, in aggregate, of hospital waste and medical/infectious waste as measured on a calendar quarter basis. For purposes of this definition, pathological waste, chemotherapeutic waste, and low-level radioactive waste are considered "other" wastes when calculating the percentage of hospital waste and medical/infectious waste combusted.

(h) "Continuous emission monitoring system or CEMS" means a monitoring system for continuously measuring and recording the emissions of a pollutant from an affected facility.

(i) "Continuous HMIWI" means an HMIWI that is designed to allow waste charging and ash removal during combustion.

(j) "Dioxins/furans" means the combined emissions of tetra-through octa-chlorinated dibenzo-para-dioxins and dibenzofurans, as measured by EPA Reference Method 23.

(k) "Dry scrubber" means an add-on air pollution control system that injects dry alkaline sorbent (dry injection) or sprays an alkaline sorbent (spray dryer) to react with and neutralize acid gases in the HMIWI exhaust stream forming a dry powder material.

(l) "Fabric filter or baghouse" means an add-on air pollution control system that removes particulate matter (PM) and nonvaporous metals emissions by passing flue gas through filter bags.

(m) "High-air phase" means the stage of the batch operating cycle when the primary chamber reaches and maintains maximum operating temperatures.

(n) "Hospital" means any facility which has an organized medical staff, maintains at least six inpatient beds, and where the primary function of the institution is to provide diagnostic and therapeutic patient services and continuous nursing care primarily to human inpatients who are not related and who stay on average in excess of 24 hours per admission. This definition does

not include facilities maintained for the sole purpose of providing nursing or convalescent care to human patients who generally are not acutely ill but who require continuing medical supervision.

(o) "Hospital/medical/infectious waste incinerator or HMIWI or HMIWI unit" means any device that combusts any amount of hospital waste and/or medical/ infectious waste.

(p) "Hospital/medical/infectious waste incinerator operator or HMIWI operator" means any person who operates, controls or supervises the day-to-day operation of an HMIWI.

(q) "Hospital waste" means discards generated at a hospital, except unused items returned to the manufacturer. The definition of hospital waste does not include human corpses, remains, and anatomical parts that are intended for interment or cremation.

(r) "Infectious agent" means any organism (such as a virus or bacteria) that is capable of being communicated by invasion and multiplication in body tissues and capable of causing disease or adverse health impacts in humans.

(s) "Intermittent HMIWI" means an HMIWI that is designed to allow waste charging, but not ash removal, during combustion.

(t) "Large HMIWI" means:

1. Except as provided in subparagraph 2.;

(i) An HMIWI whose maximum design waste burning capacity is more than 500 pounds per hour; or

(ii) A continuous or intermittent HMIWI whose maximum charge rate is more than 500 pounds per hour; or

(iii) A batch HMIWI whose maximum charge rate is more than 4,000 pounds per day.

2. The following are not large HMIWI:

(i) A continuous or intermittent HMIWI whose maximum charge rate is less than or equal to 500 pounds per hour; or

(ii) A batch HMIWI whose maximum charge rate is less than or equal to 4,000 pounds per day.

(u) "Low-level radioactive waste" means waste material which contains radioactive nuclides emitting primarily beta or gamma radiation, or both, in concentrations or quantities that exceed applicable federal or State standards for unrestricted release. Low-level radioactive waste is not high-level radioactive waste, spent nuclear fuel, or by-product material as defined by the Atomic Energy Act of 1954 [42 U.S.C. 2014(e)(2)].

(v) "Maximum charge rate" means:

1. For continuous and intermittent HMIWI, 110 percent of the lowest 3-

hour average charge rate measured during the most recent performance test demonstrating compliance with all applicable emission limits.

2. For batch HMIWI, 110 percent of the lowest daily charge rate measured during the most recent performance test demonstrating compliance with all applicable emission limits.

(w) "Maximum design waste burning capacity" means:

1. For intermittent and continuous HMIWI,

$$C = PV \times 15{,}000/8{,}500$$

Where:

C = HMIWI capacity, lb/hr

PV = primary chamber volume, ft^3

15,000 = primary chamber heat release rate factor, $Btu/ft^3/hr$ 8,500 =

standard waste heating value, Btu/lb;

2. For batch HMIWI,

$$C = PV \times 4.5/8$$ Where:

C = HMIWI capacity, lb/hr

PV = primary chamber volume, ft^3

4.5 = waste density, lb/ft^3

8 = typical hours of operation of a batch HMIWI, hours.

(x) "Maximum fabric filter inlet temperature" means 110 percent of the lowest 3-hour average temperature at the inlet to the fabric filter (taken, at a minimum, once every minute) measured during the most recent performance test demonstrating compliance with the dioxin/furan emission limit.

(y) "Maximum flue gas temperature" means 110 percent of the lowest 3-hour average temperature at the outlet from the wet scrubber (taken, at a minimum, once every minute) measured during the most recent performance test demonstrating compliance with the mercury (Hg) emission limit.

(z) "Medical/infectious waste" means any waste generated in the diagnosis, treatment, or immunization of human beings or animals, in research pertaining thereto, or in the production or testing of biologicals that is listed below: The definition of medical/ infectious waste does not include hazardous waste identified or listed under the regulations in ADEM Admin. Code r. 335-14-2; household waste, as defined in ADEM Admin. Code r. 335-14-2-.01(4)(b)1.; ash from incineration of medical/infectious waste, once the incineration process has been completed; human corpses, remains, and

anatomical parts that are intended for interment or cremation; and domestic sewage materials identified in ADEM Admin. Code r. 335-14-2-.01(4)(a)1.

1. Cultures and stocks of infectious agents and associated biologicals, including: cultures from medical and pathological laboratories; cultures and stocks of infectious agents from research and industrial laboratories; wastes from the production of biologicals; discarded live and attenuated vaccines; and culture dishes and devices used to transfer, inoculate, and mix cultures.

2. Human pathological waste, including tissues, organs, and body parts and body fluids that are removed during surgery or autopsy, or other medical procedures, and specimens of body fluids and their containers.

3. Human blood and blood products including:

(i) Liquid waste human blood;

(ii) Products of blood;

(iii) Items saturated and/or dripping with human blood; or

(iv) Items that were saturated and/or dripping with human blood that are now caked with dried human blood; including serum, plasma, and other blood components, and their containers, which were used or intended for use in either patient care, testing and laboratory analysis or the development of pharmaceuticals. Intravenous bags are also included in this category.

4. Sharps that have been used in animal or human patient care or treatment or in medical, research, or industrial laboratories, including hypodermic needles, syringes (with or without the attached needle), Pasteur pipettes, scalpel blades, blood vials, needles with attached tubing, and culture dishes (regardless of presence of infectious agents). Also included are other types of broken or unbroken glassware that were in contact with infectious agents, such as used slides and cover slips.

5. Animal waste including contaminated animal carcasses, body parts, and bedding of animals that were known to have been exposed to infectious agents during research (including research in veterinary hospitals), production of biologicals or testing of pharmaceuticals.

6. Isolation wastes including biological waste and discarded materials contaminated with blood, excretions, exudates, or secretions from humans who are isolated to protect others from certain highly communicable diseases, or isolated animals known to be infected with highly communicable diseases.

7. Unused sharps including the following unused, discarded sharps: hypodermic needles, suture needles, syringes, and scalpel blades.

(aa) "Medium HMIWI" means:

1. Except as provided in subparagraph 2.;

(i) An HMIWI whose maximum design waste burning capacity is more than 200 pounds per hour but less than or equal to 500 pounds per hour; or

(ii) A continuous or intermittent HMIWI whose maximum charge rate is more than 200 pounds per hour but less than or equal to 500 pounds per hour; or

(iii) A batch HMIWI whose maximum charge rate is more than 1,600 pounds per day but less than or equal to 4,000 pounds per day.

2. The following are not medium HMIWI:

(i) A continuous or intermittent HMIWI whose maximum charge rate is less than or equal to 200 pounds per hour or more than 500 pounds per hour; or

(ii) A batch HMIWI whose maximum charge rate is more than 4,000 pounds per day or less than or equal to 1,600 pounds per day.

(bb) "Minimum dioxin/furan sorbent flow rate" means 90 percent of the highest 3-hour average dioxin/furan sorbent flow rate (taken, at a minimum, once every hour) measured during the most recent performance test demonstrating compliance with the dioxin/furan emission limit.

(cc) "Minimum Hg sorbent flow rate" means 90 percent of the highest 3- hour average Hg sorbent flow rate (taken, at a minimum, once every hour) measured during the most recent performance test demonstrating compliance with the Hg emission limit.

(dd) "Minimum hydrogen chloride (HCl) sorbent flow rate" means 90 percent of the highest 3-hour average HCl sorbent flow rate (taken, at a minimum, once every hour) measured during the most recent performance test demonstrating compliance with the HCl emission limit.

(ee) "Minimum horsepower or amperage" means 90 percent of the highest 3-hour average horsepower or amperage to the wet scrubber (taken, at a minimum, once every minute) measured during the most recent performance test demonstrating compliance with the applicable emission limits.

(ff) "Minimum pressure drop across the wet scrubber" means 90 percent of the highest 3-hour average pressure drop across the wet scrubber PM control device (taken, at a minimum, once every minute) measured during the most recent performance test demonstrating compliance with the PM emission limit.

(gg) "Minimum scrubber liquor flow rate" means 90 percent of the highest 3-hour average liquor flow rate at the inlet to the wet scrubber (taken, at a minimum, once every minute) measured during the most recent performance test demonstrating compliance with all applicable emission limits.

(hh) "Minimum scrubber liquor pH" means 90 percent of the highest 3- hour average liquor pH at the inlet to the wet scrubber (taken, at a minimum, once every minute) measured during the most recent performance test demonstrating compliance with the HCl emission limit.

(iii) "Minimum secondary chamber temperature" means 90 percent of the highest 3-hour average secondary chamber temperature (taken, at a minimum, once every minute) measured during the most recent performance test demonstrating compliance with the PM, CO, or dioxin/furan emission limits.

(ii) "Modification or Modified HMIWI" means any change to an HMIWI unit on or after June 20, 1996 such that:

1. The cumulative costs of the modifications, over the life of the unit, exceed 50 per centum of the original cost of the construction and installation of the unit (not including the cost of any land purchased in connection with such construction or installation) updated to current costs, or

2. The change involves a physical change in or change in the method of operation of the unit which increases the amount of any air pollutant emitted by the unit for which standards have been established under Section 129 or Section 111.

(kk) "Operating day" means a 24-hour period between 12:00 midnight and the following midnight during which any amount of hospital waste or medical/ infectious waste is combusted at any time in the HMIWI.

(ll) "Operation" means the period during which waste is combusted in the incinerator excluding periods of startup or shutdown.

(mm) "Particulate matter or PM" means the total particulate matter emitted from an HMIWI as measured by EPA Reference Method 5 or EPA Reference Method 29.

(nn) "Pathological waste" means waste material consisting of only human or animal remains, anatomical parts, and/or tissue, the bags/containers used to collect and transport the waste material, and animal bedding (if applicable).

(oo) "Primary chamber" means the chamber in an HMIWI that receives waste material, in which the waste is ignited, and from which ash is removed.

(pp) "Pyrolysis" means the endothermic gasification of hospital waste and/or medical/infectious waste using external energy.

(qq) "Responsible Official" means one of the following:

1. For a corporation: a president, secretary, treasurer, or vice-president of the corporation in charge of a principal business function, or any other person who performs similar policy or decision-making functions for the corporation, or a duly authorized representative of such person if the representative is responsible for the overall operation of one or more manufacturing, production, or operating facilities applying for or subject to a permit and either:

(i) The facilities employ more than 250 persons or have gross annual sales or expenditures exceeding $25 million (in second quarter 1980 dollars); or

(ii) The delegation of authority to such representatives is approved in advance by the Department;

2. For a partnership or sole proprietorship: a general partner or the proprietor, respectively;

3. For a municipality, State, Federal, or other public agency: Either a

principal executive officer or ranking elected official. For the purposes of this rule, a principal executive officer of a Federal agency includes the chief executive officer having responsibility for the overall operations of a principal geographic unit of the agency (e.g., a Regional Administrator of EPA); or

4. For affected sources: the designated representative for any other purposes under this rule.

(rr) "Secondary chamber" means a component of the HMIWI that receives combustion gases from the primary chamber and in which the combustion process is completed.

(ss) "Shutdown" means the period of time after all waste has been combusted in the primary chamber. For continuous HMIWI, shutdown shall commence no less than 2 hours after the last charge to the incinerator. For intermittent HMIWI, shutdown shall commence no less than 4 hours after the last charge to the incinerator. For batch HMIWI, shutdown shall commence no less than 5 hours after the high-air phase of combustion has been completed.

(tt) "Small HMIWI" means:

1. Except as provided in subparagraph 2.;

(i) An HMIWI whose maximum design waste burning capacity is less than or equal to 200 pounds per hour; or

(ii) A continuous or intermittent HMIWI whose maximum charge rate is less than or equal to 200 pounds per hour; or

(iii) A batch HMIWI whose maximum charge rate is less than or equal to 1,600 pounds per day.

2. The following are not small HMIWI:

(i) A continuous or intermittent HMIWI whose maximum charge rate is more than 200 pounds per hour;

(ii) A batch HMIWI whose maximum charge rate is more than 1,600 pounds per day.

(uu) "Standard conditions" means a temperature of 20 °C and a pressure of 101.3 kilopascals.

(vv) "Standard Metropolitan Statistical Area or SMSA" means any areas listed in OMB Bulletin No. 93-17 entitled "Revised Statistical Definitions for Metropolitan Areas" dated June 30, 1993 (see 40 CFR § 60.17).

(ww) "Startup" means the period of time between the activation of the system and the first charge to the unit. For batch HMIWI, startup means the period of time between activation of the system and ignition of the waste.

(xx) "Wet scrubber" means an add-on air pollution control device that utilizes an alkaline scrubbing liquor to collect particulate matter (including nonvaporous metals and condensed organics) and/or to absorb and neutralize

acid gases.

(2) Applicability.

(a) Except as provided in subparagraphs (b) through (h) of this paragraph, the designated facility to which this rule applies is each individual HMIWI for which construction was commenced on or before June 20, 1996.

(b) A combustor is not subject to this rule during periods when only pathological waste, low-level radioactive waste, and/or chemotherapeutic waste is burned, provided the owner or operator of the combustor:

1. Notifies the Director of an exemption claim [see Appendix H]; and

2. Keeps records on a calendar quarter basis of the periods of time when only pathological waste, low-level radioactive waste, and/or chemotherapeutic waste is burned.

(c) Any co-fired combustor is not subject to this rule if the owner or operator of the co-fired combustor:

1. Notifies the Director of an exemption claim [see Appendix H];

2. Provides an estimate of the relative weight of hospital waste, medical/infectious waste, and other fuels and/or wastes to be combusted; and

3. Keeps records on a calendar quarter basis of the weight of hospital waste and medical/infectious waste combusted, and the weight of all other fuels and wastes combusted at the co-fired combustor.

(d) Any combustor required to have a permit under Section 3005 of the Solid Waste Disposal Act is not subject to this rule.

(e) Any combustor which meets the applicability requirements under 40 CFR, Subpart Cb, Ea, or Eb [ADEM Admin. Code r. 335-3-10-.02(3)(a) and (3)(b)] (standards or guidelines for certain municipal waste combustors) is not subject to this rule.

(f) Any pyrolysis unit is not subject to this rule.

(g) Cement kilns firing hospital waste and/or medical/infectious waste are not subject to this rule.

(h) Physical or operational changes made to an existing HMIWI unit solely for the purpose of complying with this rule are not considered a modification and do not result in an existing HMIWI unit becoming subject to the provisions of 40 CFR, Subpart Ec [ADEM Admin. Code r. 335-3-10-.02(c)].

(i) Each existing HMIWI is subject to the permitting requirements in ADEM Admin. Code chapter 335-3-16. Each owner and operator of an existing HMIWI shall submit a Major Source Operating Permit application to the Department by December 15, 1999.

(j) Beginning September 15, 2000, designated facilities subject to this rule shall operate pursuant to a permit issued under ADEM Admin. Code chapter

335-3-16.

(3) Emission limits.

(a) On and after the date on which the initial performance test is completed or is required to be completed under § 60.8, whichever date comes first, no owner or operator of an affected facility shall cause to be discharged into the atmosphere from that affected facility any gases that contain stack emissions in excess of the limits presented in Table 1 of this paragraph. The emission limits in Table 2 apply to any small HMIWI which is located more than 50 miles from the boundary of the nearest Standard Metropolitan Statistical Area (SMSA) and which burns less than 2,000 pounds per week of hospital waste and medical/infectious waste. The 2,000 lb/week limitation does not apply during performance tests.

(b) On and after the date on which the initial performance test is completed or is required to be completed under § 60.8, whichever date comes first, no owner or operator of an affected facility shall cause to be discharged into the atmosphere from the stack of that affected facility any gases that exhibit greater than 10 percent opacity (6-minute block average).

TABLE 1. EMISSION LIMITS FOR SMALL, MEDIUM, AND LARGE HMIWI

Pollutant	Units (7 percent oxygen, dry basis)	Emission Limits		
		HMIWI Size		
		Small	Medium	Large
Particulate Matter	Milligrams per dry standard cubic meter (grains per dry standard cubic foot)	115 (0.05)	69 (0.03)	34 (0.015)
Carbon Monoxide	Parts per million by volume	40	40	40
Dioxins/furans	Nanograms per dry standard cubic meter total dioxins/furans (grains per billion dry standard cubic feet) or nanograms per dry standard cubic meter total dioxins/furans TEQ (grains per billion dry standard cubic feet)	125 (55) or 2.3 (1.0)	125 (55) or 2.3 (1.0)	125 (55) or 2.3 (1.0)
Hydrogen Chloride	Parts per million by volume or percent reduction	100 or 93%	100 or 93%	100 or 93%
Sulfur Dioxide	Parts per million by volume	55	55	55
Nitrogen Oxides	Parts per million by volume	250	250	250

Lead	Milligrams per dry standard cubic meter (grains per thousand dry standard cubic feet) or percent reduction	1.2 (0.52) or 70%	1.2 (0.52) or 70%	1.2 (0.52) or 70%
Cadmium	Milligrams per dry standard cubic meter (grains per thousand dry standard cubic feet) or percent reduction	0.16 (0.07) or 65%	0.16 (0.07) or 65%	0.16 (0.07) or 65%
Mercury	Milligrams per dry standard cubic meter (grains per thousand dry standard cubic feet) or percent reduction	0.55 (0.24) or 85%	0.55 (0.24) or 85%	0.55 (0.24) or 85%

TABLE 2. EMISSION LIMITS FOR SMALL HMIWI

Pollutant	**Units (7 percent oxygen, dry basis)**	**HMIWI Emission Limits**
Particulate Matter	Milligrams per dry standard cubic meter (grains per dry standard cubic foot)	197 (0.086)
Carbon Monoxide	Parts per million by volume	40
Dioxins/furans	Nanograms per dry standard cubic meter total dioxins/furans (grains per billion dry standard cubic feet) or nanograms per dry standard cubic meter total dioxins/furans TEQ (grains per billion dry standard cubic feet)	800 (350) or 15 (6.6)
Hydrogen Chloride	Parts per million by volume	3100
Sulfur Dioxide	Parts per million by volume	55
Nitrogen Oxides	Parts per million by volume	250
Lead	Milligrams per dry standard cubic meter (grains per thousand dry standard cubic feet)	10 (4.4)
Cadmium	Milligrams per dry standard cubic meter (grains per thousand dry standard cubic feet)	4 (1.7)

Mercury	Milligrams per dry standard cubic meter (grains per thousand dry standard cubic feet)	7.5 (3.3)

(4) Operator Training and Qualification Requirements.

(a) Compliance with the requirements of this paragraph shall occur no later than one year after EPA approval of these rules.

(b) No owner or operator of an affected facility shall allow the affected facility to operate at any time unless a fully trained and qualified HMIWI operator is accessible, either at the facility or available within 1 hour. The trained and qualified HMIWI operator may operate the HMIWI directly or be the direct supervisor of one or more HMIWI operators.

(c) Operator training and qualification shall be obtained through a State-approved program that meets the requirements included in subparagraphs (d) through (k) of this paragraph.

(d) Training shall be obtained by completing an HMIWI operator training course that includes, at a minimum, the following provisions:

1. 24 hours of training on the following subjects:

(i) Environmental concerns, including pathogen destruction and types of emissions;

(ii) Basic combustion principles, including products of combustion;

(iii) Operation of the type of incinerator to be used by the operator, including proper startup, waste charging, and shutdown procedures;

(iv) Combustion controls and monitoring;

(v) Operation of air pollution control equipment and factors affecting performance (if applicable);

(vi) Methods to monitor pollutants (continuous emission monitoring systems and monitoring of HMIWI and air pollution control device operating parameters) and equipment calibration procedures (where applicable);

(vii) Inspection and maintenance of the HMIWI, air pollution control devices, and continuous emission monitoring systems;

(viii) Bottom and fly ash characteristics and handling procedures;

(ix) Applicable Federal, State, and local regulations;

(x) Work safety procedures;

(xi) Pre-startup inspections; and

(xii) Recordkeeping requirements.

2. An examination designed and administered by the instructor.

3. Reference material distributed to the attendees covering the course topics.

(e) Qualification shall be obtained by:

1. Completion of a training course that satisfies the criteria under subparagraph (d) of this paragraph; and

2. Either 6 months experience as an HMIWI operator, 6 months experience as a direct supervisor of an HMIWI operator, or completion of at least two burn cycles under the observation of two qualified HMIWI operators.

(f) Qualification is valid from the date on which the examination is passed or the completion of the required experience, whichever is later.

(g) To maintain qualification, the trained and qualified HMIWI operator shall complete and pass an annual review or refresher course of at least 4 hours covering, at a minimum, the following:

1. Update of regulations;

2. Incinerator operation, including startup and shutdown procedures;

3. Inspection and maintenance;

4. Discussion of operating problems encountered by attendees.

(h) A lapsed qualification shall be renewed by one of the following methods:

1. For a lapse of less than 3 years, the HMIWI operator shall complete and pass a standard annual refresher course described in subparagraph (g) of this paragraph above.

2. For a lapse of 3 years or more, the HMIWI operator shall complete and pass a training course with the minimum criteria described in subparagraph (d) of this paragraph above.

(i) The owner or operator of an affected facility shall maintain documentation at the facility that address the following:

1. Summary of the applicable standards under this rule;

2. Description of basic combustion theory applicable to an HMIWI;

3. Procedures for receiving, handling, and charging waste;

4. HMIWI startup, or shutdown procedures;

5. Procedures for maintaining proper combustion air supply levels;

6. Procedures for operating the HMIWI and associated air pollution control systems within the standards established under this rule;

7. Procedures for monitoring HMIWI emissions;

8. Reporting and recordkeeping procedures; and

9. Procedures for handling ash.

(j) The owner or operator of an affected facility shall establish a program for reviewing the information listed in subparagraph (i) of this paragraph annually with each HMIWI operator.

1. The initial review of the information listed in subparagraph (i) of this paragraph shall be conducted within 6 months after EPA approval of these rules or prior to assumption of responsibilities affecting HMIWI operation, whichever date is later.

2. Subsequent reviews of the information listed in subparagraph (i) of this paragraph shall be conducted annually.

(k) The information listed in subparagraph (i) of this paragraph shall be kept in a readily accessible location for all HMIWI operators. This information, along with records of training shall be available for inspection by the Department.

(5) Waste Management Guidelines.

The owner or operator of an affected facility shall prepare a waste management plan. The waste management plan shall identify both the feasibility and the approach to separate certain components of solid waste from the health care waste stream in order to reduce the amount of toxic emissions from incinerated waste. A waste management plan may include, but is not limited to, elements such as paper, cardboard, plastics, glass, battery, or metal recycling; or purchasing recycled or recyclable products. A waste management plan may include different goals or approaches for different areas or departments of the facility and need not include new waste management goals for every waste stream. It should identify, where possible, reasonably available additional waste management measures, taking into account the effectiveness of waste management measures already in place, the costs of additional measures, the emission reductions expected to be achieved, and any other environmental or energy impacts they might have. The American Hospital Association publication entitled "An Ounce of Prevention: Waste Reduction Strategies for Health Care Facilities" shall be considered in the development of the waste management plan.

(6) Inspection Guidelines.

(a) The requirements of this paragraph apply to small HMIWI subject to the emission limits in Table 2 of paragraph (3) of this rule.

(b) Within one year of EPA approval of these rules and annually thereafter (no more than 12 months following the previous annual equipment inspection) an equipment inspection shall be performed.

1. At a minimum, an inspection shall include the following:

(i) Inspect all burners, pilot assemblies, and pilot sensing devices for proper operation; clean pilot flame sensor, as necessary;

(ii) Ensure proper adjustment of primary and secondary chamber combustion air, and adjust as necessary;

(iii) Inspect hinges and door latches, and lubricate as necessary;

(iv) Inspect dampers, fans, and blowers for proper operation;

(v) Inspect HMIWI door and door gaskets for proper sealing;

(vi) Inspect motors for proper operation;

(vii) Inspect primary chamber refractory lining; clean and repair/replace lining as necessary;

(viii) Inspect incinerator shell for corrosion and/or hot spots;

(ix) Inspect secondary/tertiary chamber and stack, clean as necessary;

(x) Inspect mechanical loader, including limit switches, for proper operation, if applicable;

(xi) Visually inspect waste bed (grates), and repair/seal, as appropriate;

(xii) For the burn cycle that follows the inspection, document that the incinerator is operating properly and make any necessary adjustments;

(xiii) Inspect air pollution control device(s) for proper operation, if applicable;

(xiv) Inspect waste heat boiler systems to ensure proper operation, if applicable;

(xv) Inspect bypass stack components;

(xvi) Ensure proper calibration of thermocouples, sorbent feed systems and any other monitoring equipment; and

(xvii) Generally observe that the equipment is maintained in good operating condition.

2. Within 10 operating days following an equipment inspection, all necessary repairs shall be completed unless the owner or operator obtains written approval from the Department establishing a date whereby all necessary repairs of the designated facility shall be completed.

(7) <u>Compliance and Performance Testing.</u>

(a) The emission limits under this rule apply at all times except during

periods of startup or shutdown, provided that no hospital waste or medical/infectious waste is charged to the affected facility during startup or shutdown.

(b) The owner or operator of an affected facility shall conduct an initial performance test as required under § 60.8 to determine compliance with the emission limits using the procedures and test methods listed in subparagraphs (b)1. through (b)11. of this paragraph. The use of the bypass stack during a performance test shall invalidate the performance test.

1. All performance tests shall consist of a minimum of three test runs conducted under representative operating conditions.

2. The minimum sample time shall be 1 hour per test run unless otherwise indicated.

3. EPA Reference Method 1 of Appendix A of 40 CFR 60 shall be used to select the sampling location and number of traverse points.

4. EPA Reference Method 3, 3A or 3B of Appendix A of 40 CFR 60 shall be used for gas composition analysis, including measurement of oxygen concentration. EPA Reference Method 3, 3A or 3B of Appendix A of 40 CFR 60 shall be used simultaneously with each reference method.

5. The pollutant concentrations shall be adjusted to 7 percent oxygen using the following equation:

$$C_{adj} = C_{meas}(20.9 - 7)/(20.9 - \%O_2)$$

Where:

C_{adj} = pollutant concentration adjusted to 7 percent oxygen;

C_{meas} = pollutant concentration measured on a dry basis (20.9 - 7) = 20.9 percent oxygen - 7 percent oxygen (defined oxygen correction basis);

20.9 = oxygen concentration in air, percent; and

$\%O_2$ = oxygen concentration measured on a dry basis, percent.

6. EPA Reference Method 5 or 29 of Appendix A of 40 CFR 60 shall be used to measure the particulate matter emissions.

7. EPA Reference Method 9 of Appendix A of 40 CFR 60 shall be used to measure stack opacity.

8. EPA Reference Method 10 or 10B of Appendix A of 40 CFR 60 shall be used to measure the CO emissions.

9 . EPA Reference Method 23 of Appendix A of 40 CFR 60 shall be used to measure total dioxin/furan emissions. The minimum sample time shall be 4 hours per test run. If the affected facility has selected the toxic equivalency standards for dioxin/furans, under paragraph (3) of this rule, the following

procedures shall be used to determine compliance:

(i) Measure the concentration of each dioxin/furan tetra-through octa-congener emitted using EPA Reference Method 23.

(ii) For each dioxin/furan congener measured in accordance with subparagraph (b)9.(i) of this paragraph, multiply the congener concentration by its corresponding toxic equivalency factor specified in Table 3 of this rule.

(iii) Sum the products calculated in accordance with subparagraph (b)9.(ii) of this paragraph to obtain the total concentration of dioxins/furans emitted in terms of toxic equivalency.

TABLE 3. TOXIC EQUIVALENCY FACTORS

Dioxin/Furan Congener	Toxic Equivalency Factor
2,3,7,8-tetrachlorinated dibenzo-p-dioxin	1
1,2,3,7,8- pentachlorinated dibenzo-p-dioxin	0.5
1,2,3,4,7,8-hexachlorinated dibenzo-p-dioxin	0.1
1,2,3,7,8,9-hexachlorinated dibenzo-p-dioxin	0.1
1,2,3,6,7,8-hexachlorinated dibenzo-p-dioxin	0.1
1,2,3,4,6,7,8-heptachlorinated dibenzo-p-dioxin	0.01
octachlorinated dibenzo-p-dioxin	0.001
2,3,7,8-tetrachlorinated dibenzofuran	0.1
2,3,4,7,8-pentachlorinated dibenzofuran	0.5
1,2,3,7,8-pentachlorinated dibenzofuran	0.05
1,2,3,4,7,8-hexachlorinated dibenzofuran	0.1
1,2,3,6,7,8-hexachlorinated dibenzofuran	0.1
1,2,3,7,8,9-hexachlorinated dibenzofuran	0.1

2,3,4,6,7,8-hexachlorinated dibenzofuran	0.1
1,2,3,4,6,7,8-heptachlorinated dibenzofuran	0.01
1,2,3,4,7,8,9-heptachlorinated dibenzofuran	0.01
octachlorinated dibenzofuran	0.001

10. EPA Reference Method 26 or 26A of Appendix A of 40 CFR 60 shall be used to measure HCl emissions. If the affected facility has selected the percentage reduction standards for HCl under paragraph (3) of this rule, the percentage reduction in HCl emissions ($\%R_{HCl}$) is computed using the following formula:

$$(\%R_{HCl}) = \left(\frac{E_i - E_o}{E_i}\right) \times 100$$

Where:

$\%R_{HCl}$ = percentage reduction of HCl emissions achieved;

Ei = HCl emission concentration measured at the control device inlet, corrected to 7 percent oxygen (dry basis); and

Eo = HCl emission concentration measured at the control device outlet, corrected to 7 percent oxygen (dry basis).

11. EPA Reference Method 29 of Appendix A of 40 CFR 60 shall be used to measure Pb, Cd, and Hg emissions. If the affected facility has selected the percentage reduction standards for metals under paragraph (3) of this rule, the percentage reduction in emissions (%R metal) is computed using the following formula:

$$(\%R_{metal}) = \left(\frac{E_i - E_o}{E_i}\right) - 100$$

Where:

%R metal = percentage reduction of metal emission (Pb, Cd, or Hg) achieved;

Ei = metal emission concentration (Pb, Cd, or Hg) measured at the control device inlet, corrected to 7 percent oxygen (dry basis); and

Eo = metal emission concentration (Pb, Cd, or Hg) measured at the control device outlet, corrected to 7 percent oxygen (dry basis).

(c) Following the date on which the initial performance test is completed or is required to be completed under § 60.8, whichever date comes first, the owner or operator of an affected facility shall:

(b) Determine compliance with the opacity limit by conducting an annual performance test (no more than 12 months following the previous performance test) using the applicable procedures and test methods listed in subparagraph (b) of this paragraph.

1. Determine compliance with the PM, CO, and HCl emission limits by conducting an annual performance test (no more than 12 months following the previous performance test) using the applicable procedures and test methods listed in subparagraph (b) of this paragraph. If all three performance tests over a 3-year period indicate compliance with the emission limit for a pollutant (PM, CO, or HCl), the owner or operator may forego a performance test for that pollutant for the subsequent 2 years, if specifically approved by the Director. At a minimum, a performance test for PM, CO, and HCl shall be conducted every third year (no more than 36 months following the previous performance test). If a performance test conducted every third year indicates compliance with the emission limit for a pollutant (PM, CO, or HCl), the owner or operator may forego a performance test for that pollutant for up to an additional 2 years, if specifically approved by the Director. If any performance test indicates noncompliance with the respective emission limit, a performance test for that pollutant shall be conducted annually until all annual performance tests over a 3-year period indicate compliance with the emission limit. The use of the bypass stack during a performance test shall invalidate the performance test.

2. Facilities using a CEMS to demonstrate compliance with any of the emission limits under paragraph (3) of this rule shall:

(i) Determine compliance with the appropriate emission limit(s) using a 12-hour rolling average, calculated each hour as the average of the previous 12 operating hours (not including startup or shutdown).

(ii) Operate all CEMS in accordance with the applicable procedures under Appendices B and F of 40 CFR 60.

(d) The owner or operator of an affected facility equipped with a dry scrubber followed by a fabric filter, a wet scrubber, or a dry scrubber followed by a fabric filter and wet scrubber shall:

1. Establish the appropriate maximum and minimum operating parameters, indicated in Table 4 of this rule for each control system, as site specific operating parameters during the initial performance test to determine compliance with the emission limits; and

2. Following the date on which the initial performance test is completed or is required to be completed under § 60.8, whichever date comes first, ensure that the affected facility does not operate above any of the applicable maximum operating parameters or below any of the applicable minimum operating parameters listed in Table 4 of this rule and measured as 3-hour rolling averages (calculated each hour as the average of the previous 3 operating hours) at all times except during periods of startup or shutdown. Operating parameter limits do not apply during performance tests. Operation above the established maximum or below the established minimum operating parameter(s) shall constitute a violation of established operating parameter(s).

(e) Except as provided in subparagraph (h) of this paragraph, for affected facilities equipped with a dry scrubber followed by a fabric filter:

1. Operation of the affected facility above the maximum charge rate and below the minimum secondary chamber temperature (each measured on a 3-hour rolling average) simultaneously shall constitute a violation of the CO emission limit.

2. Operation of the affected facility above the maximum fabric filter inlet temperature, above the maximum charge rate, and below the minimum dioxin/furan sorbent flow rate (each measured on a 3-hour rolling average) simultaneously shall constitute a violation of the dioxin/furan emission limit.

3. Operation of the affected facility above the maximum charge rate and below the minimum HCl sorbent flow rate (each measured on a 3-hour rolling average) simultaneously shall constitute a violation of the HCl emission limit.

4. Operation of the affected facility above the maximum charge rate and below the minimum Hg sorbent flow rate (each measured on a 3-hour rolling average) simultaneously shall constitute a violation of the Hg emission limit.

5. Use of the bypass stack (except during startup or shutdown) shall constitute a violation of the PM, dioxin/furan, HCl, Pb, Cd and Hg emission limits.

(f) Except as provided in subparagraph (h) of this paragraph, for affected facilities equipped with a wet scrubber:

1. Operation of the affected facility above the maximum charge rate and below the minimum pressure drop across the wet scrubber or below the minimum horsepower or amperage to the system (each measured on a 3-hour rolling average) simultaneously shall constitute a violation of the PM emission limit.

2. Operation of the affected facility above the maximum charge rate and below the minimum secondary chamber temperature (each measured on a 3-hour rolling average) simultaneously shall constitute a violation of the CO emission limit.

3. Operation of the affected facility above the maximum charge rate, below the minimum secondary chamber temperature, and below the minimum scrubber liquor flow rate (each measured on a 3-hour rolling average) simultaneously shall constitute a violation of the dioxin/furan emission limit.

4. Operation of the affected facility above the maximum charge rate and below the minimum scrubber liquor pH (each measured on a 3-hour rolling

average) simultaneously shall constitute a violation of the HCl emission limit.

5. Operation of the affected facility above the maximum flue gas temperature and above the maximum charge rate (each measured on a 3-hour rolling average) simultaneously shall constitute a violation of the Hg emission limit.

6. Use of the bypass stack (except during startup or shutdown) shall constitute a violation of the PM, dioxin/furan, HCl, Pb, Cd and Hg emission limits.

(g) Except as provided in subparagraph (h) of this paragraph, for affected facilities equipped with a dry scrubber followed by a fabric filter and a wet scrubber:

1. Operation of the affected facility above the maximum charge rate and below the minimum secondary chamber temperature (each measured on a 3-hour rolling average) simultaneously shall constitute a violation of the CO emission limit.

2. Operation of the affected facility above the maximum fabric filter inlet temperature, above the maximum charge rate, and below the minimum dioxin/furan sorbent flow rate (each measured on a 3-hour rolling average) simultaneously shall constitute a violation of the dioxin/furan emission limit.

3. Operation of the affected facility above the maximum charge rate and below the minimum scrubber liquor pH (each measured on a 3-hour rolling average) simultaneously shall constitute a violation of the HCl emission limit.

4. Operation of the affected facility above the maximum charge rate and below the minimum Hg sorbent flow rate (each measured on a 3-hour rolling average) simultaneously shall constitute a violation of the Hg emission limit.

5. Use of the bypass stack (except during startup or shutdown) shall constitute a violation of the PM, dioxin/furan, HCl, Pb, Cd and Hg emission limits.

(h) The owner or operator of an affected facility may conduct a repeat performance test within 30 days of violation of applicable operating parameter(s) to demonstrate that the affected facility is not in violation of the applicable emission limit(s). Repeat performance tests conducted pursuant to this paragraph shall be conducted using the identical operating parameters that indicated a violation under subparagraph (e), (f), or (g) of this paragraph.

(i) The owner or operator of an affected facility using an air pollution control device other than a dry scrubber followed by a fabric filter, a wet scrubber, or a dry scrubber followed by a fabric filter and a wet scrubber to comply with the emission limits under paragraph (3) of this rule shall petition the Administrator for other site-specific operating parameters to be established during the initial performance test and continuously monitored thereafter. The owner or operator shall not conduct the initial performance test until after the petition has been approved by the Administrator.

(j) The owner or operator of an affected facility may conduct a repeat performance test at any time to establish new values for the operating parameters. The Administrator may request a repeat performance test at any time.

(k) Any small HMIWI subject to the emission limits in Table 2 of paragraph (3) of this rule shall meet the following compliance and performance testing requirements:

1. Conduct the performance testing requirements in subparagraphs (a), (b)1. through (b)9., (b)11. [Mercury only], and (c)1. of this paragraph. The 2,000 lb/week limitation does not apply during performance tests.

2. Establish maximum charge rate and minimum secondary chamber temperature as site-specific operating parameters during the initial performance test to determine compliance with applicable emission limits.

3. Following the date on which the initial performance test is completed or is required to be completed under § 60.8, whichever date comes first, ensure that the designated facility does not operate above the maximum charge rate or below the minimum secondary chamber temperature measured as 3-hour rolling averages (calculated each hour as the average of the previous 3 operating hours) at all times except during periods of startup or shutdown. Operating parameter limits do not apply during performance tests. Operation above the maximum charge rate or below the minimum secondary chamber temperature shall constitute a violation of the established operating parameter(s).

4. Except as provided in subparagraph (k)5. of this paragraph below, operation of the designated facility above the maximum charge rate and below the minimum secondary chamber temperature (each measured on a 3-hour rolling average) simultaneously shall constitute a violation of the PM, CO, and dioxin/furan emission limits.

5. The owner or operator of a designated facility may conduct a repeat performance test within 30 days of violation of applicable operating parameter(s) to demonstrate that the designated facility is not in violation of the applicable emission limit(s). Repeat performance tests conducted pursuant to this paragraph must be conducted using the identical operating parameters that indicated a violation under subparagraph (k)4. of this paragraph above.

(8) Monitoring.

(a) The owner or operator of an affected facility shall install, calibrate (to manufacturers' specifications), maintain, and operate devices (or establish methods) for monitoring the applicable maximum and minimum operating parameters listed in Table 4 of this rule such that these devices (or methods) measure and record values for these operating parameters at the frequencies indicated in Table 4 of this rule at all times except during periods of startup and shutdown.

(b) The owner or operator of an affected facility shall install, calibrate (to manufacturers' specifications), maintain, and operate a device or method for measuring the use of the bypass stack including date, time, and duration.

(c) The owner or operator of an affected facility using something other than a dry scrubber followed by a fabric filter, a wet scrubber, or a dry scrubber followed by a fabric filter and a wet scrubber to comply with the emission limits under paragraph (3) of this rule shall install, calibrate (to the manufacturers' specifications), maintain, and operate the equipment necessary to monitor the site-specific operating parameters developed pursuant to subparagraph (7)(i) of

this rule.

(d) The owner or operator of an affected facility shall obtain monitoring data at all times during HMIWI operation except during periods of monitoring equipment malfunction, calibration, or repair. At a minimum, valid monitoring data shall be obtained for 75 percent of the operating hours per day and for 90 percent of the operating days per calendar quarter that the affected facility is combusting hospital waste and/or medical/infectious waste.

(3) Any small HMIWI subject to the emission limits in Table 2 of paragraph (3) of this rule shall meet the following monitoring requirements:

1. Install, calibrate (to manufacturers' specifications), maintain, and operate a device for measuring and recording the temperature of the secondary chamber on a continuous basis, the output of which shall be recorded, at a minimum, once every minute throughout operation.

2. Install, calibrate (to manufacturers' specifications), maintain, and operate a device which automatically measures and records the date, time, and weight of each charge fed into the HMIWI.

3. The owner or operator of a designated facility shall obtain monitoring data at all times during HMIWI operation except during periods of monitoring equipment malfunction, calibration, or repair. At a minimum, valid monitoring data shall be obtained for 75 percent of the operating hours per day and for 90 percent of the operating hours per calendar quarter that the designated facility is combusting hospital waste and/or medical/infectious waste.

TABLE 4. OPERATING PARAMETERS TO BE MONITORED AND MINIMUM MEASUREMENT AND RECORDING FREQUENCIES

Operating Parameters to be Monitored	Minimum Frequency		Control System		
	Data Measurement	Data Recording	Dry Scrubber followed by Fabric Filter	Wet Scrubber	Dry Scrubber followed by Fabric Filter and Wet Scrubber
Maximum operating parameters:					
Maximum charge rate	Continuous	1xhour	√	√	√
Maximum fabric filter inlet temperature	Continuous	1xminute	√		√
Maximum flue gas temperature	Continuous	1xminute	√	√	

Minimum operating parameters:					
Minimum secondary chamber temperature	Continuous	1xminute	√	√	√
Minimum dioxin/furan sorbent flow rate	Hourly	1xhour	√		√
Minimum HCl sorbent flow rate	Hourly	1xhour	√		√
Minimum mercury (Hg) sorbent flow rate	Hourly	1xhour	√		√
Minimum pressure drop across the wet scrubber or minimum horsepower or amperage to the scrubber	Continuous	1xminute		√	√
Minimum scrubber liquor flow rate	Continuous	1xminute		√	√
Minimum scrubber liquor pH	Continuous	1xminute		√	√

(9) Reporting and Recordkeeping Requirements.

(a) The owner or operator of an affected facility shall maintain the following information (as applicable) for a period of at least 5 years:

1. Calendar date of each record;

2. Records of the following data:

(i) Concentrations of any pollutant listed in paragraph (3) of this rule or measurements of opacity as determined by the continuous emission monitoring system (if applicable);

(ii) Results of fugitive emissions (by EPA Reference Method 22) tests, if applicable;

(iii) HMIWI charge dates, times, and weights and hourly charge rates;

(iv) Fabric filter inlet temperatures during each minute of operation, as applicable;

(v) Amount and type of dioxin/furan sorbent used during each hour of operation, as applicable;

(vi) Amount and type of Hg sorbent used during each hour of operation, as applicable;

(vii) Amount and type of HCl sorbent used during each hour of operation, as applicable;

(viii) Secondary chamber temperatures recorded during each minute of operation;

(ix) Liquor flow rate to the wet scrubber inlet during each minute of

operation, as applicable;

(x) Horsepower or amperage to the wet scrubber during each minute of operation, as applicable;

(xi) Pressure drop across the wet scrubber system during each minute of operation, as applicable,

(xii) Temperature at the outlet from the wet scrubber during each minute of operation, as applicable;

(xiii) pH at the inlet to the wet scrubber during each minute of operation, as applicable,

(xiv) Records indicating use of the bypass stack, including dates, times, and durations, and

(xv) For affected facilities complying with subparagraphs (7)(i) and (8)(c) of this rule, the owner or operator shall maintain all operating parameter data collected.

3. Identification of calendar days for which data on emission rates or operating parameters specified under subparagraph (a)2. of this paragraph have not been obtained, with an identification of the emission rates or operating parameters not measured, reasons for not obtaining the data, and a description of corrective actions taken.

4. Identification of calendar days for which data on emission rates or operating parameters specified under subparagraph (a)2. of this paragraph exceeded the applicable limits, with a description of the exceedances, reasons for such exceedances, and a description of corrective actions taken.

5. The results of the initial, annual, and any subsequent performance tests conducted to determine compliance with the emission limits and/or to establish operating parameters, as applicable.

6. Records showing the names of HMIWI operators who have completed review of the information in subparagraph (4)(i) as required by subparagraph (4)(j), including the date of the initial review and all subsequent annual reviews;

7. Records showing the names of the HMIWI operators who have completed the operator training requirements, including documentation of training and the dates of the training;

8. Records showing the names of the HMIWI operators who have met the criteria for qualification under paragraph (4) of this rule and the dates of their qualification; and

9. Records of calibration of any monitoring devices as required under subparagraphs (8)(a), (b), and (c) of this rule.

(b) The owner or operator of an affected facility shall submit the information specified in subparagraphs (b)1. through (b)3. of this paragraph no later than 60 days following the initial performance test. All reports shall be signed by the responsible official.

1. The initial performance test data as recorded under subparagraphs (7)(b)1. through (b)11., as applicable.

2. The values for the site-specific operating parameters established pursuant to subparagraphs (7)(d) or (i), as applicable.

3. The waste management plan as specified in paragraph (5) of this rule.

(c) An annual report shall be submitted 1 year following the submission of the information in subparagraph (b) of this paragraph and subsequent reports shall be submitted no more than 12 months following the previous report (once the unit is subject to permitting requirements under chapter 335-3-16, the owner or operator of an affected facility must submit these reports semiannually). The annual report shall include the information specified in subparagraphs (c)1. through (c)8. of this paragraph. All reports shall be signed by the responsible official.

1. The values for the site-specific operating parameters established pursuant to subparagraph (7)(d) or (i), as applicable.

2. The highest maximum operating parameter and the lowest minimum operating parameter, as applicable, for each operating parameter recorded for the calendar year being reported, pursuant to subparagraph (7)(d) or (i), as applicable.

3. The highest maximum operating parameter and the lowest minimum operating parameter, as applicable for each operating parameter recorded pursuant to subparagraph (7)(d) or (i) for the calendar year preceding the year being reported, in order to provide the Director with a summary of the performance of the affected facility over a 2-year period.

4. Any information recorded under subparagraphs (c)3. through (c)5. of this paragraph for the calendar year being reported.

5. Any information recorded under subparagraphs (c)3. through (c)5. of this paragraph for the calendar year preceding the year being reported, in order to provide the Director with a summary of the performance of the affected facility over a 2-year period.

6. If a performance test was conducted during the reporting period, the results of that test.

7. If no exceedances were reported under subparagraphs (c)3. through (c)5. of this paragraph for the calendar year being reported, a statement that no exceedances occurred during the reporting period.

8. Any use of the bypass stack, the duration, reason for its use, and corrective action taken.

(d) The owner or operator of an affected facility shall submit semiannual reports containing any information recorded under subparagraphs (a)3. through (a)5. of this paragraph no later than 60 days following the reporting period. The first semiannual reporting period ends 6 months following the submission of information in subparagraph (b) of this paragraph. Subsequent reports shall be submitted no later than 6 calendar months following the previous report. All reports shall be signed by the responsible official.

(e) All records specified under subparagraph (a) of this paragraph shall be maintained onsite in either paper copy or computer-readable format, unless an alternative format is approved by the Director.

(f) Any small HMIWI subject to the emission limits in Table 2 of paragraph (3) of this rule shall meet the following reporting and recordkeeping requirements:

(g) Maintain records of the annual equipment inspections, any required

maintenance, and any repairs not completed within 10 days of an inspection or the timeframe established by the Department; and

(h) Submit an annual report containing information recorded under subparagraph (f)1. above no later than 60 days following the year in which data were collected. Subsequent reports shall be sent no later than 12 calendar months following the previous report (once the unit is subject to permitting requirements under chapter 335-3-16, the owner or operator must submit these reports semiannually). The report shall be signed by the responsible official.

(10) Compliance Schedules.

(a) Except as provided in subparagraph (b), designated facilities to which this rule applies [as defined in paragraph (2)] shall comply with all requirements of this rule on or before the date one year after EPA approval of these rules, regardless of whether the Department has identified a designated facility in its inventory required by § 60.25(a) of 40 CFR, Subpart B.

[NOTE: EPA approved these rules effective June 9, 2000 in the April 10, 2000 Federal Register.]

(b) For designated facilities planning to install the necessary air pollution control equipment, the Department may allow compliance on or before the date three years after EPA approval of these rules, but as expeditiously as possible. Within 90 days of EPA's approval of these rules, these facilities shall petition the Department in writing, as outlined in subparagraphs 1. through 2. below. Under no circumstances can compliance with these rules extend beyond September 15, 2002.

1. Documentation of the analyses undertaken to support the need for an extension, including an explanation of why up to 3 years after EPA approval of these rules is sufficient time to comply while 1 year after EPA approval of these rules is not sufficient. The documentation shall also include an evaluation of the option to transport the waste offsite to a commercial medical waste treatment and disposal facility on a temporary or permanent basis; and

2. Documentation of measurable and enforceable incremental steps of progress to be taken towards compliance with this rule, as defined in subparagraphs (i) through (x) below:

(i) Date for submitting a petition for site specific operating parameters under subparagraph (7)(i) of this rule [§ 60.56c(i) of 40 CFR Subpart Ec].

(ii) Date for obtaining services of an architectural and engineering firm regarding the air pollution control device(s);

(iii) Date for obtaining design drawings of the air pollution control device(s);

(iv) Date for ordering the air pollution control device(s);

(v) Date for obtaining the major components of the air pollution control device(s);

(vi) Date for initiation of site preparation for installation of the air pollution control device(s);

(vii) Date for initiation of installation of the air pollution control device(s);

(viii) Date for initial startup of the air pollution control device(s); and

(ix) Date for initial compliance test(s) of the air pollution control device(s).

(x) Date for final compliance.

(c) Designated facilities planning to shut down permanently to demonstrate compliance with subparagraph (a) of these rules shall notify the Department in writing, within 90 days after EPA approval of these rules. The notification shall include documentation of measurable and enforceable incremental steps of progress to be taken towards compliance with this rule, as defined in subparagraphs 1. through 6. below:

1. Date for designated facility plan for shut down;

2. Date for contract with the appropriate vendor (off-site hauler or alternative waste treatment equipment);

3. Date to begin construction of alternative waste treatment equipment (if applicable);

4. Date for complete installation of alternative waste treatment equipment (if applicable);

5. Date for shut down of incinerator;

6. Date for dismantling incinerator.

(d) Department Actions on Petitions. On receipt of a petition, the Department will authorize one of the following actions, as they shall determine:

1. The petition may be dismissed if the Department determines that it is not adequate under subparagraph (b) of this paragraph.

2. The Department may grant the request of the petition, as petitioned or by imposing such conditions as these rules may require in the Major Source Operating Permit, including the establishment of schedules of compliance.

3. The Department may deny the petition. If such a denial is made, the Department shall notify the petitioner in writing, state the reasons for denial and outline procedures for appeal.

(e) Termination Procedures.

Any petition granted by the Department may be terminated by the Department whenever the Department finds, after an opportunity for the petitioner to demonstrate compliance and after notice and an opportunity for hearing, that the petitioner is in violation of any requirement, condition, schedule, limitation or any other provision of the petition or that operation under the petition does not meet the minimum requirements established by state and federal laws and regulations or is unreasonably threatening the public health.

Author: Ronald W. Gore.
Statutory Authority: Code of Alabama 1975, §§22-28-14, 22-22A-5, 22-22A-6, and 22-22A-8.
History: Effective Date: May 20, 1999.
Amended: September 7, 2000; March 14, 2002.

335-3-3-.05 Incineration of Commercial and Industrial Solid Waste.

(1) Terms used but not defined in this rule are defined in 40 CFR 60, Subparts A and B, and are incorporated by reference in ADEM Admin. Code chapter 335-3-10. For the purposes of this rule only, the following definitions apply:

(a) "30-day rolling average" means the arithmetic mean of the previous 720 hours of valid operating data. Valid data excludes periods when this unit is not operating. The 720 hours should be consecutive, but not necessarily continuous if operations are intermittent.

(b) "Administrator" means the Administrator of the U.S. Environmental Protection Agency or his/her authorized representative.

(c) "Affirmative defense" means, in the context of an enforcement proceeding, a response or defense put forward by a defendant, regarding which the defendant has the burden of proof, and the merits of which are independently and objectively evaluated in a judicial or administrative proceeding.

(d) "Agricultural waste" means vegetative agricultural materials such as nut and grain hulls and chaff (e.g., almond, walnut, peanut, rice, and wheat), bagasse, orchard prunings, corn stalks, coffee bean hulls and grounds, and other vegetative waste materials generated as a result of agricultural operations.

(e) "Air curtain incinerator (ACI)" means an incinerator that operates by forcefully projecting a curtain of air across an open chamber or pit in which combustion occurs. Incinerators of this type can be constructed above or below ground and with or without refractory walls and floor. Air curtain incinerators are not to be confused with conventional combustion devices with enclosed fireboxes and controlled air technology such as mass burn, modular, and fluidized bed combustors.

(f) "Annual heat input" means the heat input for the 12 months preceding the compliance demonstration.

(g) "Auxiliary fuel" means natural gas, liquified petroleum gas, fuel oil, or diesel fuel.

(h) "Average annual heat input rate" means annual heat input divided by the hours of operation for the 12 months preceding the compliance demonstration.

(i) "Bag leak detection system" means an instrument that is capable of monitoring particulate matter loadings in the exhaust of a fabric filter (i.e., baghouse) in order to detect bag failures. A bag leak detection system includes, but is not limited to, an instrument that operates on triboelectric, light scattering, light transmittance, or other principle to monitor relative particulate matter loadings.

(j) "Burn-off oven" means any rack reclamation unit, part reclamation unit, or drum reclamation unit. A burn-off oven is not an incinerator, waste-burning kiln, an energy recover unit or a small, remote incinerator under this rule.

(k) "Bypass stack" means a device used for discharging combustion gases to avoid severe damage to the air pollution control device or other equipment.

(l) "Calendar quarter" means three consecutive months (nonoverlapping) beginning on: January 1, April 1, July 1, or October 1.

(m) "Calendar year" means 365 consecutive days starting on January 1 and ending on December 31.

(n) "CEMS data during startup and shutdown" means the following:

1. For incinerators, small remote incinerators: CEMS data collected during the first hours of a CISWI unit startup from a cold start until waste is fed into the unit and the hours of operation following the cessation of waste material being fed to the CISWI during a unit shutdown. For each startup event, the length of time that CEMS data may be claimed as being CEMS data during startup must be 48 operating hours or less. For each shutdown event, the length of time that CEMS data may be claimed as being CEMS data during shutdown must be 24 operating hours or less.

2. For energy recovery units: CEMS data collected during the startup or shutdown periods of operation. Startup begins with either the first-ever firing of fuel in a boiler or process heater for the purpose of supplying useful thermal energy (such as steam or heat) for heating, cooling or process purposes, or producing electricity, or the firing of fuel in a boiler or process heater for any purpose after a shutdown event. Startup ends four hours after when the boiler or process heater makes useful thermal energy (such as heat or steam) for heating, cooling, or process purposes, or generates electricity or when no fuel is being fed to the boiler or process heater, whichever is earlier. Shutdown begins when the boiler or process heater no longer makes useful thermal energy (such as heat or steam) for heating, cooling, or process purposes and/or generates electricity or when no fuel is being fed to the boiler or process heater, whichever is earlier. Shutdown ends when the boiler or process heater no longer makes useful thermal energy (such as steam or heat) for heating, cooling, or process purposes and/or generates electricity, and no fuel is being combusted in less;

3. For waste-burning kilns: CEMS data collected during the periods of kiln operation that do not include normal operations. Startup means the time from when a shutdown kiln first begins firing fuel until it begins producing clinker. Startup begins when a shutdown kiln turns on the induced draft fan and begins firing fuel in the main burner. Startup ends when feed is being continuously introduced into the kiln for a least 120 minutes or when the feed rate exceeds 60 percent of the kiln design limitation rate, whichever occurs first. Shutdown means the cessation of kiln operation. Shutdown begins when feed to the kiln is halted and ends when continuous kiln rotation ceases.

(o) "Chemical recovery unit" means combustion units burning materials to recover chemical constituents or to produce chemical compounds where there is an existing commercial market for such recovered chemical constituents or compounds. A chemical recovery unit is not an incinerator, a waste-burning kiln, an energy recovery unit or a small, remote incinerator under this rule. The following seven types of units are considered chemical recovery units:

1. Units burning only pulping liquors (i.e., black liquor) that are reclaimed in a pulping liquor recovery process and reused in the pulping process.

2. Units burning only spent sulfuric acid used to produce virgin sulfuric acid.

3. Units burning only wood or coal feedstock for the production of charcoal.

4. Units burning only manufacturing byproduct streams/residue containing catalyst metals that are reclaimed and reused as catalysts or used to produce commercial grade catalysts.

5. Units burning only coke to produce purified carbon monoxide that is used as an intermediate in the production of other chemical compounds.

6. Units burning only hydrocarbon liquids or solids to produce hydrogen, carbon monoxide, synthesis gas, or other gases for use in other manufacturing processes.

7. Units burning only photographic film to recover silver.

(p) "Chemotherapeutic waste" means waste material resulting from the production or use of antineoplastic agents used for the purpose of stopping or reversing the growth of malignant cells.

(q) "Clean lumber" means wood or wood products that have been cut or shaped and include wet, air-dried, and kiln-dried wood products. Clean lumber does not include wood products that have been painted, pigment-stained, or pressure-treated by compounds such as chromate copper arsenate, pentachlorophenol, and creosote.

(r) "Commercial and industrial solid waste incineration unit (CISWI) " means any distinct operating unit of any commercial or industrial facility that combusts, or has combusted in the preceding 6 months, any solid waste as that term is defined in 40 CFR part 241. If the operating unit burns material other than traditional fuels as defined in §241.2 that have been discarded, and the owner or operator does not keep and produce records as required by subparagraph (ll)(u) of this rule, the operating unit is a CISWI. While not all CISWIs will include all of the following components, a CISWI includes, but is not limited to, the solid waste feed system, grate system, flue gas system, waste heat recovery equipment, if any, and bottom ash system. The CISWI does not include air pollution control equipment or the stack. The CISWI boundary starts at the solid waste hopper (if applicable) and extends through two areas:

1. The combustion unit flue gas system, which ends immediately after the last combustion chamber or after the waste heat recovery equipment, if any; and

2. The combustion unit bottom ash system, which ends at the truck loading station or similar equipment that transfers the ash to final disposal. The CISWI unit includes all ash handling systems connected to the bottom ash handling system.

3. A CISWI unit does not include any of the types of units described in subparagraph (2)(d) of this rule, nor does it include any combustion turbine or reciprocating internal combustion engine.

(s) "Contained gaseous material" means gases that are in a container when that container is combusted.

(t) "Continuous emission monitoring system (CEMS)" means the total equipment that may be required to meet the data acquisition and availability requirements of this rule, used to sample, condition (if applicable), analyze, and provide a record of emissions.

(u) "Continuous monitoring system (CMS)" means the total equipment, required under the emission monitoring sections in applicable rules, used to sample and condition (if applicable), to analyze, and to provide a permanent record of emissions or process parameters. A particulate matter continuous parameter monitoring system (PM CPMS) is a type of CMS.

(v) "Cyclonic burn barrel" means a combustion device for waste materials that is attached to a 55 gallon, open-head drum. The device consists of a lid, which fits onto and encloses the drum, and a blower that forces combustion air into the drum in a cyclonic manner to enhance the mixing of waste material and air. A cyclonic burn barrel is not an incinerator, a waste-burning kiln, an energy recovery unit or a small, remote incinerator under this rule.

(w) "Deviation" means any instance in which an affected source subject to this rule, or an owner or operator of such a source:

1. Fails to meet any requirement or obligation established by this rule, including but not limited to any emission limitation, operating limit, or operator qualification and accessibility requirements;

2. Fails to meet any term or condition that is adopted to implement an applicable requirement in this rule and that is included in the operating permit for any affected source required to obtain such a permit.

(x) "Dioxins/furans" means tetra-through octachlorinated dibenzo-p-dioxins and dibenzofurans.

(y) "Discard" means, for purposes of this rule and 40 CFR 60, Subpart CCCC [ADEM Admin. Code r. 335-3-10-.02(81)], only, burned in an incineration unit without energy recovery.

(z) "Drum reclamation unit" means a unit that burns residues out of drums (e.g., 55 gallon drums) so that the drums can be reused.

(aa) "Dry scrubber" means an add-on air pollution control system that injects dry alkaline sorbent (dry injection) or sprays an alkaline sorbent (spray dryer) to react with and neutralize acid gas in the exhaust stream forming a dry powder material. Sorbent injection systems in fluidized bed boilers and process heaters are included in this definition. A dry scrubber is a dry control system.

(bb) "Energy recovery" means the process of recovering thermal energy from combustion for useful purposes such as steam generation or process heating.

(cc) "Energy recovery unit" means a combustion unit combusting solid waste (as that term is defined by the Administrator in 40 CFR part 241) for energy

recovery. Energy recovery units include units that would be considered boilers and process heaters if they did not combust solid waste.

(dd) "Energy recovery unit designed to burn biomass (Biomass)" means an energy recovery unit that burns solid waste, biomass, and non-coal solid materials but less than 10 percent coal, on a heat input basis on an annual average, either alone or in combination with liquid waste, liquid fuel or gaseous fuels.

(ee) "Energy recovery unit designed to burn coal (Coal)" means an energy recovery unit that burns solid waste and at least 10 percent coal on a heat input basis on an annual average, either alone or in combination with liquid waste, liquid fuel or gaseous fuels.

(ff) "Energy recovery unit designed to burn liquid waste materials and gas (Liquid/gas)" means an energy recovery unit that burns a liquid waste with liquid or gaseous fuels not combined with any solid fuel or waste materials.

(gg) "Energy recovery unit designed to burn solid materials (Solids)" includes energy recovery units designed to burn coal and energy recovery units designed to burn biomass.

(hh) "Fabric filter" means an add-on air pollution control device used to capture particulate matter by filtering gas streams through filter media, also known as a baghouse.

(ii) "Foundry sand thermal reclamation unit" means a type of part reclamation unit that removes coatings that are on foundry sand. A foundry sand thermal reclamation unit is not an incinerator, a waste-burning kiln, an energy recovery unit or a small, remote incinerator under this rule.

(jj) "Incinerator" means any furnace used in the process of combusting solid waste (as that term is defined by the Administrator under Resource Conservation and Recovery Act in 40 CFR part 241) for the purpose of reducing the volume of the waste by removing combustible matter. Incinerator designs include single chamber and two-chamber.

(kk) "In-line coal mill" means those coal mills using kiln exhaust gases in their process. Coal mills with a heat source other than the kiln or coal mills using exhaust gases from the clinker cooler alone are not an in-line coal mill.

(ll) "In-line kiln/raw mill" means a system in a Portland Cement production process where dry kiln system is integrated with the raw mill so that all or a portion of the kiln exhaust gases are used to perform the drying operation of the raw mill, with no auxiliary heat source used. In this system the kiln is capable of operating without the raw mill operating, but the raw mill cannot operate without the kiln gases, and consequently, the raw mill does not generate a separate exhaust gas stream.

(mm) "Kiln" means an oven or furnace, including any associated preheater or precalciner devices, in-line raw mills, in-line coal mills or alkali bypass used for processing a substance by burning, firing or drying. Kilns include cement kilns that produce clinker by heating limestone and other materials for subsequent production of Portland Cement. Because the alkali bypass, inline raw mill and

inline coal mill are considered an integral part of the kiln, the kiln emissions limits also apply to the exhaust of the alkali bypass, in-line raw mill and in-line coal mill.

(nn) "Laboratory analysis unit" means units that burn samples of materials for the purpose of chemical or physical analysis. A laboratory analysis unit is not an incinerator, waste-burning kiln, an energy recovery unit or a small, remote incinerator under this rule.

(oo) "Load fraction" means the actual heat input of an energy recovery unit divided by heat input during the performance test that established the minimum sorbent injection rate or minimum activated carbon injection rate, expressed as a fraction (e.g., for 50 percent load the load fraction is 0.5).

(pp) "Low-level radioactive waste" means waste material which contains radioactive nuclides emitting primarily beta or gamma radiation, or both, in concentrations or quantities that exceed applicable Federal or State standards for unrestricted release. Low-level radioactive waste is not high-level radioactive waste, spent nuclear fuel, or by-product material as defined by the Atomic Energy Act of 1954 [42 U.S.C. 2014(e)(2)].

(qq) "Malfunction" means any sudden, infrequent, and not reasonably preventable failure of air pollution control equipment, process equipment, or a process to operate in a normal or usual manner. Failures that are caused, in part, by poor maintenance or careless operation are not malfunctions.

(rr) "Minimum voltage or amperage" means 90 percent of the lowest test-run average voltage or amperage to the electrostatic precipitator measured during the most recent particulate matter or mercury performance test demonstrating compliance with the applicable emission limits.

(ss) "Modification or modified CISWI" means a CISWI that has been changed later than August 7, 2013, and that meets one of two criteria:

1. The cumulative cost of the changes over the life of the unit exceeds 50 percent of the original cost of building and installing the CISWI (not including the cost of land) updated to current costs (current dollars). To determine what systems are within the boundary of the CISWI used to calculate these costs, see the definition of CISWI.

2. Any physical change in the CISWI or change in the method of operating it that increases the amount of any air pollutant emitted for which section 129 or section 111 of the Clean Air Act has established standards.

(tt) "Municipal solid waste or municipal-type solid waste" means household, commercial/retail, or institutional waste. Household waste includes material discarded by residential dwellings, hotels, motels, and other similar permanent or temporary housing. Commercial/retail waste includes material discarded by stores, offices, restaurants, warehouses, nonmanufacturing activities at industrial facilities, and other similar establishments or facilities. Institutional waste includes materials discarded by schools, by hospitals (nonmedical), by nonmanufacturing activities at prisons and government facilities, and other similar establishments or facilities. Household, commercial/retail, and institutional waste does include yard waste and refuse- derived fuel. Household,

commercial/retail, and institutional waste does not include used oil; sewage sludge; wood pallets; construction, renovation, and demolition wastes (which include railroad ties and telephone poles); clean wood; industrial process or manufacturing wastes; medical waste; or motor vehicles (including motor vehicle parts or vehicle fluff).

(uu) "Opacity" means the degree to which emissions reduce the transmission of light and obscure the view of an object in the background.

(vv) "Operating day" means a 24-hour period between 12:00 midnight and the following midnight during which any amount of solid waste is combusted at any time in the CISWI.

(ww) "Oxygen analyzer system" means all equipment required to determine the oxygen content of a gas stream and used to monitor oxygen in the boiler or process heater flue gas, boiler/process heater, firebox, or other appropriate location. This definition includes oxygen trim systems and certified oxygen CEMS. The source owner or operator is responsible to install, calibrate, maintain, and operate the oxygen analyzer system in accordance with the manufacturer's recommendations.

(xx) "Oxygen trim system" means a system of monitors that is used to maintain excess air at the desired level in a combustion device over its operating range. A typical system consists of a flue gas oxygen and/or carbon monoxide monitor that automatically provides a feedback signal to the combustion air controller or draft controller.

(yy) "Part reclamation unit" means a unit that burns coatings off parts (e.g., tools, equipment) so that the parts can be reconditioned and reused.

(zz) "Particulate matter" means total particulate matter emitted from CISWIs as measured by Method 5 or Method 29 of 40 CFR 60, Appendix A.

(aaa) "Pathological waste" means waste material consisting of only human or animal remains, anatomical parts, and/or tissue, the bags/containers used to collect and transport the waste material, and animal bedding (if applicable).

(bbb) "Performance evaluation" means the conduct of relative accuracy testing, calibration error testing, and other measurements used in validating the continuous monitoring system data.

(ccc) "Performance test" means the collection of data resulting from the execution of a test method (usually three emission test runs) used to demonstrate compliance with a relevant emission standard as specified in the performance test section of the relevant standard.

(ddd) "Process change" means any of the following physical or operational changes:

1. A physical change (maintenance activities excluded) to the CISWI which may increase the emission rate of any air pollutant to which a standard applies;

2. An operational change to the CISWI where a new type of non-hazardous secondary material is being combusted;

3. A physical change (maintenance activities excluded) to the air pollution control devices used to comply with the emission limits for the CISWI (e.g., replacing an electrostatic precipitator with a fabric filter);

4. An operational change to the air pollution control devices used to comply with the emission limits for the affected CISWI (e.g., change in the sorbent injection rate used for activated carbon injection).

(eee) "Rack reclamation unit" means a unit that burns the coatings off racks used to hold small items for application of a coating. The unit burns the coating overspray off the rack so the rack can be reused.

(fff) Raw mill means a ball or tube mill, vertical roller mill or other size reduction equipment, that is not part of an in-line kiln/raw mill, used to grind feed to the appropriate size. Moisture may be added or removed from the feed during the grinding operation. If the raw mill is used to remove moisture from feed materials, it is also, by definition, a raw material dryer. The raw mill also includes the air separator associated with the raw mill.

(ggg) "Reconstruction" means rebuilding a CISWI and meeting two criteria:

1. The reconstruction begins on or after August 7, 2013.

2. The cumulative cost of the construction over the life of the incineration unit exceeds 50 percent of the original cost of building and installing the CISWI (not including land) updated to current costs (current dollars). To determine what systems are within the boundary of the CISWI used to calculate these costs, see the definition of CISWI.

(hhh) "Refuse-derived fuel" means a type of municipal solid waste produced by processing municipal solid waste through shredding and size classification. This includes all classes of refuse-derived fuel including two fuels:

1. Low-density fluff refuse-derived fuel through densified refuse-derived fuel.

2. Pelletized refuse-derived fuel.

(iii) "Responsible Official" means one of the following:

1. For a corporation: a president, secretary, treasurer, or vice-president of the corporation in charge of a principal business function, or any other person who performs similar policy or decision-making functions for the corporation, or a duly authorized representative of such person if the representative is responsible for the overall operation of one or more manufacturing, production, or operating facilities applying for or subject to a permit and either:

(i) The facilities employ more than 250 persons or have gross annual sales or expenditures exceeding $25 million (in second quarter 1980 dollars); or

(ii) The delegation of authority to such representatives is approved in advance by the Department;

2. For a partnership or sole proprietorship: a general partner or the proprietor, respectively;

3. For a municipality, State, Federal, or other public agency: Either a principal executive officer or ranking elected official. For the purposes of this rule, a principal executive officer of a Federal agency includes the chief executive officer having responsibility for the overall operations of a principal geographic unit of the agency (e.g., a Regional Administrator of EPA); or

4. For affected facilities:

(i) The designated representative in so far as actions, standards, requirements, or prohibitions under Title IV of the Clean Air Act or the regulations promulgated there under are concerned; or

(ii) The designated representative for any other purposes under 40 CFR Part 60.

(jjj) "Shutdown" means the period of time after all waste has been combusted in the primary chamber.

(kkk) "Small, remote incinerator" means an incinerator that combusts solid waste (as that term is defined by the Administrator in 40 CFR part 241) and combusts 3 tons per day or less solid waste and is more than 25 miles driving distance to the nearest municipal solid waste landfill.

(lll) "Soil treatment unit" means a unit that thermally treats petroleum-contaminated soils for the sole purpose of site remediation. A soil treatment unit may be direct-fired or indirect fired. A soil treatment unit is not an incinerator, a waste-burning kiln, an energy recovery unit or a small, remote incinerator under this rule.

(mmm) "Solid waste" (as defined in 40 CFR 241.2) means any garbage, refuse, sludge from a wastewater treatment plant, water supply treatment plant, or air pollution control facility and other discarded material, including solid, liquid, semisolid, or contained gaseous material resulting from industrial, commercial, mining, agricultural operations, and from community activities, but does not include solid or dissolved material~~s~~ in domestic sewage, or solid or dissolved materials in irrigation return flows or industrial discharges that are point sources subject to permit under 33 U.S.C. 1342, or source, special nuclear, or by-product material as defined by the Atomic Energy Act of 1954, as amended (68 Stat. 923).

(nnn) "Solid waste incineration unit" means a distinct operating unit of any facility which combusts any solid waste (as that term is defined by the Administrator in 40 CFR part 241) material from commercial or industrial establishments or the general public (including single and multiple residences, hotels and motels). Such term does not include incinerators or other units required to have a permit under section 3005 of the Solid Waste Disposal Act. The term "solid waste incineration unit" does not include:

1. Materials recovery facilities (including primary or secondary smelters) which combust waste for the primary purpose of recovering metals;

2. Qualifying small power production facilities, as defined in section 3(17)(C) of the Federal Power Act (16 U.S.C. 769(17)(C)), or qualifying cogeneration facilities, as defined in section 3(18)(B) of the Federal Power Act (16 U.S.C. 796(18)(B)), which burn homogeneous waste (such as units which burn tires or used oil, but not including refuse-derived fuel) for the production of electric energy or in the case of qualifying cogeneration facilities which burn homogeneous waste for the production of electric energy and steam or forms of useful energy (such as heat) which are used for industrial, commercial, heating or cooling purposes; or

3. Air curtain incinerators provided that such incinerators only burn wood wastes, yard wastes and clean lumber and that such air curtain incinerators comply with opacity limitations to be established by the Director by rule.

(ooo) "Space heater" means a unit that meets the requirements of 40 CFR A space heater is not an incinerator, a waste-burning kiln, an energy recovery unit or a small, remote incinerator under this rule.

(ppp) "Standard conditions, when referring to units of measure", means a temperature of 68 deg. F (20 deg. C) and a pressure of 1 atmosphere (101.3 kilopascals).

(qqq) "Startup period" means the period of time between the activation of the system and the first charge to the unit.

(rrr) "Waste-burning kiln" means a kiln that is heated, in whole or in part, by combusting solid waste (as the term is defined by the Administrator in 40 CFR part 241). Secondary materials used in Portland cement kilns shall not be deemed to be combusted unless they are introduced into the flame zone in the hot end of the kiln or mixed with the precalciner fuel.

(sss) "Wet scrubber" means an add-on air pollution control device that uses an aqueous or alkaline scrubbing liquor to collect particulate matter (including nonvaporous metals and condensed organics) and/or to absorb and neutralize acid gases.

(ttt) "Wood waste" means untreated wood and untreated wood products, including tree stumps (whole or chipped), trees, tree limbs (whole or chipped), bark, sawdust, chips, scraps, slabs, millings, and shavings. Wood waste does not include:

1. Grass, grass clippings, bushes, shrubs, and clippings from bushes and shrubs from residential, commercial/retail, institutional, or industrial sources as part of maintaining yards or other private or public lands.

2. Construction, renovation, or demolition wastes.

3. Clean lumber.

(2) Applicability.

(a) Except as provided in subparagraph (b) of this paragraph below, the designated facility to which this rule applies is each individual CISWI and ACI that commenced construction on or before June 4, 2010, or commenced modification or reconstruction after June 4, 2010 but no later than August 7, 2013.

(b) If the owner or operator of a CISWI or ACI makes changes that meet the definition of modification or reconstruction after August 7, 2013, the CISWI or ACI becomes subject to 40 CFR 60, Subpart CCCC [ADEM Admin. Code r. 335- 3-10-.02(81)] and this rule no longer applies to that unit.

(c) If the owner or operator of a CISWI or ACI makes physical or operational changes to an existing CISWI unit primarily to comply this rule, 40 CFR 60, Subpart CCCC [ADEM Admin. Code r. 335-3-10-.02(81)] does not apply to that unit. Such changes do not qualify as modifications or reconstructions under Subpart CCCC.

(d) The following types of units are exempt from this rule, but some units are required to provide notification.:

1. Pathological waste incineration units. Incineration units burning 90 percent or more by weight (on a calendar quarter basis and excluding the weight of auxiliary fuel and combustion air) of pathological waste, low-level radioactive waste, and/or chemotherapeutic waste as defined in paragraph (1) are not subject to this rule if the two requirements specified in subparagraphs (d)1.(i) and (ii) of this paragraph below are met.

(i) Notify the Director that the unit meets these criteria.

(ii) Keep records on a calendar quarter basis of the weight of pathological waste, low-level radioactive waste, and/or chemotherapeutic waste burned, and the weight of all other fuels and wastes burned in the unit.

2. Municipal waste combustion units. Incineration units that are subject to 40 CFR 60, Subpart Ea (Standards of Performance for Municipal Waste Combustors); 40 CFR 60, Subpart Eb (Standards of Performance for Large Municipal Waste Combustors); 40 CFR 60, Subpart Cb (Emission Guidelines and Compliance Time for Large Municipal Combustors); 40 CFR 60, Subpart AAAA (Standards of Performance for Small Municipal Waste Combustion Units); or 40 CFR 60, Subpart BBBB (Emission Guidelines for Small Municipal Waste Combustion Units)

3. Medical waste incineration units. Incineration units regulated under 40 CFR 60, Subpart Ec incorporated by reference in rule 335-3-10-.02(3)(c) (Standards of Performance for Hospital/Medical/Infectious Waste Incinerators for Which Construction is Commenced After June 20, 1996) or rule 335-3-3-.04 [Incineration of Hospital/Medical/Infectious Waste].

4. Small power production facilities. Units that meet the four requirements specified in subparagraphs (d)4.(i) through (iv) of this paragraph below.

(i) The unit qualifies as a small power-production facility under Section 3(17)(C) of the Federal Power Act (16 U.S.C. 796(17)(C)).

(ii) The unit burns homogeneous waste (not including refuse-derived fuel) to produce electricity.

(iii) The owner or operator submit a request to the Director for a determination that the qualifying small power production facility is combusting homogenous waste.

(iv) The owner or operator maintains records specified in subparagraph (ll)(v) of this rule.

5. Cogeneration facilities. Units that meet the four requirements specified in subparagraphs (d)5.(i) through (iv) of this paragraph below.

(i) The unit qualifies as a cogeneration facility under Section 3(18)(B) of the Federal Power Act (16 U.S.C. 796(18)(B)).

(ii) The unit burns homogeneous waste (not including refuse-derived fuel) to produce electricity and steam or other forms of energy used for industrial, commercial, heating, or cooling purposes.

(iii) The owner or operator submits a request to the Director for a determination that the qualifying cogeneration facility is combusting homogenous waste.

(iv) The owner or operator maintain records specified in subparagraph (ll)(w) of this rule.

6. Hazardous waste combustion units. Units that are required to get a permit under section 3005 of the Solid Waste Disposal Act.

7. Materials recovery units. Units that combust waste for the primary purpose of recovering metals, such as primary and secondary smelters.

8. Sewage treatment plants. Incineration units regulated under 40 CFR 60, Subpart O as incorporated in rule 335-3-10-.02(15) (Standards of Performance for Sewage Treatment Plants).

9. Sewage sludge incineration units. Incineration units combusting sewage sludge for the purpose of reducing the volume of the sewage sludge by removing combustible matter that are subject to subpart LLLL of 40 CFR 60 as incorporated in rule 335-3-10-.02(90) (Standards of Performance for New Sewage Sludge Incineration Units) or subpart MMMM of 40 CFR 60 (Emission Guidelines and Compliance Times for Existing Sewage Sludge Incineration Units).

10. Other solid waste incineration units. Incineration units that are subject to subpart EEEE of 40 CFR 60 (Standards of Performance for Other Solid Waste Incineration Units) or subpart FFFF of 40 CFR 60 (Emission Guidelines and Compliance Times for Other Solid Waste Incineration Units).

(3) Increments of Progress.

(a) For owners or operators planning to achieve compliance more than one year following the effective date of EPA's approval of these rules, the two increments of progress specified in subparagraphs (a)1. and 2. of this paragraph below shall be met.

1. Submit a final control plan to the Director no later than one year after the effective date of EPA's approval of these rules.

2. Achieve final compliance no later than December 1, 2005 for CISWI units that commenced construction on or before November 30, 1999, or February 7, 2018 for CISWI units that commenced construction on or before June 4, 2010.

(b) The owner or operator shall submit to the Director, notifications for achieving increments of progress. The notifications shall be postmarked no later than 10 business days after the compliance date for the increment. These notifications shall include the three items specified in subparagraphs (b)1. through 3. of this paragraph below:

1. Notification that the increment of progress has been achieved.

2. Any items required to be submitted with each increment of progress.

3. Signature of the owner or operator of the CISWI.

(c) If an owner or operator fails to meet an increment of progress, a notification to the Director shall be submitted and postmarked within 10 business days after the date for that increment of progress in subparagraph (3)(a) above. The owner or operator shall inform the Director that the increment was not met, and reports shall be submitted each subsequent calendar month until the increment of progress is met.

(d) For the control plan increment of progress, the owner or operator shall satisfy the two requirements specified in subparagraphs (d)1. and 2. of this paragraph below.

1. Submit the final control plan that includes the five items described in subparagraphs (d)1.(i) through (v). of this paragraph below.

(i) A description of the devices for air pollution control and process changes that will be used to comply with the emission limitations and other requirements of this rule.

(ii) The type(s) of waste to be burned.

(iii) The maximum design waste burning capacity.

(iv) The anticipated maximum charge rate.

(v) If applicable, the petition for site-specific operating limits under paragraph (6)(c) of this rule.

2. Maintain an onsite copy of the final control plan.

(e) For the final compliance increment of progress, the owner or operator shall complete all process changes and retrofit construction of control devices, as specified in the final control plan, so that, if the affected CISWI is brought online, all necessary process changes and air pollution control devices would operate as designed.

(f) Closing and restarting a CISWI.

1. If the CISWI is closed but will be restarted prior to the final compliance date of December 1, 2005 for CISWI units that commenced construction on or before November 30, 1999, or February 7, 2018 for CISWI units that commenced construction on or before June 4, 2010, the owner or operator shall meet the increments of progress specified in subparagraph (a) of this paragraph.

2. If the CISWI is closed but will be restarted after the final compliance date of December 1, 2005 for CISWI units that commenced construction on or before November 30, 1999, or February 7, 2018 for CISWI units that commenced construction on or before June 4, 2010, the owner or operator shall complete emission control retrofits and meet the emission limitations and operating limits on the date the unit restarts operation.

(g) Permanent closure of a CISWI. If the owner or operator plans to close the CISWI rather than comply with this rule, submit a closure notification, including the date of closure, to the Director within 90 days after EPA approval of these rules.

(4) Waste Management Plan.

(a) A waste management plan is a written plan that identifies both the feasibility and the methods used to reduce or separate certain components of solid waste from the waste stream in order to reduce or eliminate toxic emissions from incinerated waste.

(b) A waste management plan shall be submitted no later than the date specified in subparagraph (3)(a)1. of this rule for submittal of the final control plan.

(c) A waste management plan shall include consideration of the reduction or separation of waste-stream elements such as paper, cardboard, plastics, glass, batteries, or metals; or the use of recyclable materials. The plan shall identify any additional waste management measures, and the source shall implement those measures considered practical and feasible, based on the effectiveness of waste management measures already in place, the costs of additional measures, the emissions reductions expected to be achieved, and any other environmental or energy impacts they might have.

(5) Operator Training and Qualification.

(a) No CISWI can be operated unless a fully trained and qualified CISWI operator is accessible, either at the facility or can be at the facility within 1 hour. The trained and qualified CISWI operator may operate the CISWI directly or be

the direct supervisor of one or more other plant personnel who operate the unit. If all qualified CISWI operators are temporarily not accessible, the procedures in subparagraph (h) of this paragraph below shall be followed.

(b) Operator training and qualification shall be obtained through a State-approved program that meets the requirements included in subparagraph (c) of this paragraph below. Qualification is valid from the date on which the training course is completed and the operator successfully passes the examination required under subparagraph (c)2. of this paragraph below.

(c) Training shall be obtained by completing an incinerator operator training course that includes, at a minimum, the three elements described in subparagraphs (c)1. through 3. of this paragraph below.

(xi) Training on the eleven subjects listed in subparagraphs (c)1.(i) through of this paragraph below.

(i) Environmental concerns, including types of emissions.
(ii) Basic combustion principles, including products of combustion.

(iii) Operation of the specific type of incinerator to be used by the operator, including proper startup, waste charging, and shutdown procedures.

(iv) Combustion controls and monitoring.

(v) Operation of air pollution control equipment and factors affecting performance (if applicable).

(vi) Inspection and maintenance of the incinerator and air pollution control devices.

(vii) Actions to prevent and correct malfunctions or to prevent conditions that may lead to malfunction.

(viii) Bottom and fly ash characteristics and handling procedures.

(ix) Applicable Federal, State, and local regulations, including Occupational Safety and Health Administration workplace standards.

(x) Pollution prevention.

(xi) Waste management practices.

1. An examination designed and administered by the instructor.

2. Written material covering the training course topics that can serve as reference material following completion of the course.

(d) The operator training course shall be completed by the later of the three dates specified in subparagraphs (d)1. through 3. of this paragraph below.

1. The final compliance date of December 1, 2005 for CISWIs that commenced construction on or before November 30, 1999, or February 7, 2018 for CISWIs that commenced construction on or before June 4, 2010.

2. Six months after CISWI startup.

3. Six months after an employee assumes responsibility for operating the CISWI or assumes responsibility for supervising the operation of the CISWI.

(e) To maintain qualification, the operator shall complete an annual review or refresher course covering, at a minimum, the five topics described in subparagraphs (e)1. through 5. of this paragraph below.

1. Update of regulations.

2. Incinerator operation, including startup and shutdown procedures, waste charging, and ash handling.

3. Inspection and maintenance.

4. Prevention and correction of malfunctions or conditions that may lead to malfunction.

5. Discussion of operating problems encountered by attendees.

(f) A lapsed operator qualification shall be renewed by one of the two methods specified in subparagraphs (f)1. and 2. of this paragraph below.

1. For a lapse of less than 3 years, the operator shall complete a standard annual refresher course described in subparagraph (e) of this paragraph above.

2. For a lapse of 3 years or more, the operator shall repeat the initial qualification requirements in subparagraphs (b) and (c) of this paragraph above.

(g) Requirements for site specific documentation.

1. Site specific documentation shall be available at the facility and readily accessible for all CISWI operators that addresses the ten topics described in subparagraphs (g)1.(i) through (x) of this paragraph below. The owner or operator shall maintain this information and the training records required by subparagraph (g)3. of this paragraph below in a manner that they can be readily accessed and are suitable for inspection upon request.

(i) Summary of the applicable standards under this rule.

(ii) Procedures for receiving, handling, and charging waste.

(iii) Incinerator startup, shutdown, and malfunction procedures.

(iv) Procedures for maintaining proper combustion air supply levels.

(v) Procedures for operating the incinerator and associated air pollution control systems within the standards established under this rule.

(vi) Monitoring procedures for demonstrating compliance with the incinerator operating limits.

(vii) Reporting and recordkeeping procedures.

(viii) The waste management plan required under paragraph (4) of this rule.

(ix) Procedures for handling ash.

(x) A list of the wastes burned during the performance test.

2. The owner or operator shall establish a program for reviewing the information listed in subparagraph (g)1. of this paragraph above with each incinerator operator.

(i) The initial review of the information listed in subparagraph (g)1. of this paragraph shall be conducted by the later of the three dates specified in subparagraphs (g)2.(i)(I) through (III) of this paragraph below.

(I) The final compliance date of December 1, 2005 for CISWIs that commenced construction on or before November 30, 1999, or February 7, 2018 for CISWIs that commenced construction on or before June 4, 2010.

(II) Six months after CISWI startup.

(III) Six months after being assigned to operate the CISWI.

(ii) Subsequent annual reviews of the information listed in subparagraph (g)1. of this paragraph shall be conducted no later than 12 months following the previous review.

3. The owner or operator shall also maintain the information specified in subparagraphs (g)3.(i) through (iii) below.

(i) Records showing the names of CISWI operators who have completed review of the information in subparagraph (g)1. of this paragraph above as required by subparagraph (g)2. of this paragraph, including the date of the initial review and all subsequent annual reviews.

(ii) Records showing the names of the CISWI operators who have completed the operator training requirements under this paragraph, met the criteria for qualification under subparagraphs (a), (b) and (c) of this paragraph, and maintained or renewed their qualification under subparagraphs (e) or (f) of this paragraph, respectively. Records shall include documentation of training, the dates of the initial refresher training, and the dates of their qualification and all subsequent renewals of such qualifications.

(iii) For each qualified operator, the phone and/or pager number at which they can be reached during operating hours.

(h) If all qualified operators are temporarily not accessible (i.e., not at the facility and not able to be at the facility within 1 hour), the owner or operator shall

meet one of the two criteria specified in subparagraphs (h)1. and 2. of this paragraph below, depending on the length of time that a qualified operator is not accessible.

1. When all qualified operators are not accessible for more than 8 hours, but less than 2 weeks, the CISWI may be operated by other plant personnel familiar with the operation of the CISWI who have completed a review of the information specified in subparagraph (g)1. of this paragraph within the past 12 months. However, the period when all qualified operators were not accessible shall be recorded and this deviation included in the annual report as specified under paragraph (11) of this rule.

2. When all qualified operators are not accessible for 2 weeks or more, the two actions that are described in subparagraphs (h)2.(i) and (ii) of this paragraph below shall be taken.

(i) Notify the Director of this deviation in writing within 10 days. In the notice, state what caused this deviation, what actions are being taken to ensure that a qualified operator is accessible, and when it is expected that a qualified operator will be accessible.

(ii) Submit a status report to the Administrator every 4 weeks outlining what actions are being taken to ensure that a qualified operator is accessible, stating when it is expected that a qualified operator will be accessible and requesting approval from the Administrator to continue operation of the CISWI. The first status report shall be submitted 4 weeks after notification to the Director of the deviation under subparagraph (h)2.(i). If the Administrator notifies the owner or operator that the request to continue operation of the CISWI is disapproved, the CISWI may continue operation for 90 days, then shall cease operation. Operation of the unit may resume if the two requirements in subparagraphs (h)2.(ii)(I) and (II) of this paragraph below are met.

(I) A qualified operator is accessible as required under subparagraph (a) of this paragraph.

(II) The owner or operator notifies the Administrator that a qualified operator is accessible and operation is resuming.

(6) Emission Limitations and Operating Limits.

(a) The owner or operator shall meet the emission limitations for each CISWI, including bypass stack or vent, specified in Table 1 of this rule or tables 5 through 8 of this rule by the final compliance date of December 1, 2005 for CISWIs that commenced construction on or before November 30, 1999, or February 7, 2018 for CISWIs that commenced construction on or before June 4, 2010, as applicable. The emission limitations apply at all times the unit is operating including and not limited to startup, shutdown, or malfunction.

1. Units that do not use wet scrubbers shall maintain opacity to less than equal to the percent opacity (three 1-hour blocks consisting of ten 6-minute average opacity values) specified in table 1 of this rule, as applicable.

(b) Timelines for Operating Limits.

1. If a wet scrubber(s) is used to comply with the emission limitations, the owner or operator shall establish operating limits for up to four operating parameters (as specified in Table 2 of this rule) as described in subparagraphs (b)1.(i) through (iv) of this paragraph during the initial performance test.

(i) Maximum charge rate, calculated using one of the two different procedures in subparagraph (b)1.(i)(I) or (II) of this paragraph, as appropriate.

(I) For continuous and intermittent units, maximum charge rate is 110 percent of the average charge rate measured during the most recent performance test demonstrating compliance with all applicable emission limitations.

(II) For batch units, maximum charge rate is 110 percent of the daily charge rate measured during the most recent performance test demonstrating compliance with all applicable emission limitations.

(ii) Minimum pressure drop across the wet particulate matter scrubber, which is calculated as lowest 1-hour average pressure drop across the wet scrubber measured during the most recent performance test demonstrating compliance with the particulate matter emission limitations; or minimum amperage to the wet scrubber, which is calculated as the lowest 1-hour average amperage to the wet scrubber measured during the most recent performance test demonstrating compliance with the particulate matter emission limitations.

(iii) Minimum scrubber liquid flow rate, which is calculated as the lowest 1-hour average liquid flow rate at the inlet to the wet acid gas or particulate matter scrubber measured during the most recent performance test demonstrating compliance with all applicable emission limitations.

(iv) Minimum scrubber liquor pH, which is calculated as the lowest 1-hour average liquor pH at the inlet to the wet acid gas scrubber measured during the most recent performance test demonstrating compliance with the HCl emission limitation.

2. The owner or operator shall meet the operating limits established on the date that the performance test report is submitted to the EPA's Central Data Exchange or postmarked, per the requirements of (11)(hh). .

3. If the owner or operator uses a fabric filter to comply with the emission limitations and does not use a particulate matter (PM) continuous parameter monitoring system (CPMS) for monitoring PM compliance, each fabric filter system shall be operated such that the bag leak detection system alarm does not sound more than 5 percent of the operating time during a 6-month period. In calculating this operating time percentage, if inspection of the fabric filter demonstrates that no corrective action is required, no alarm time is counted. If corrective action is required, each alarm shall be counted as a minimum of 1 hour. If the owner or operator takes longer than 1 hour to initiate corrective action, the alarm time shall be counted as the actual amount of time taken by the owner or operator to initiate corrective action.

4. If the owner or operator uses an electrostatic precipitator to comply with the emission limitations and does not use a PM CPMs for monitoring PM compliance, the owner or operator shall measure the (secondary) voltage and amperage of the

electrostatic precipitator collection plates during the particulate matter performance test. Calculate the average electric power value (secondary voltage x secondary current = secondary electric power) for each test run. The operating limit for the electrostatic precipitator is calculated as the lowest 1-hour average secondary electric power measured during the most recent performance test demonstrating compliance with the particulate matter emission limitations.

5. If the owner or operator uses an activated carbon sorbent injection to comply with the emission limitations, the owner or operator shall measure the sorbent flow rate during the performance testing. The operating limit for the carbon sorbent injection is calculated as the lowest 1-hour average sorbent flow rate measured during the most recent performance test demonstrating compliance with the mercury emission limitations. For energy recovery units, when the unit operates at lower loads, multiply the sorbent injection rate by the load fraction, as defined in this rule, to determine the required injection rate (e.g., for 50 percent load, multiply the injection rate operating limit by 0.5).

6. If the owner or operator uses selective noncatalytic reduction to comply with the emission limitations, the owner or operator shall measure the charge rate, the secondary chamber temperature (if applicable to the CISWI, and the reagent flow rate during the nitrogen oxides performance testing. The operating limits for the selective noncatalytic reduction are calculated as the highest 1-hour average charge rate, lowest secondary chamber temperature, and lowest reagent flow rate measured during the most recent performance test demonstrating compliance with the nitrogen oxides emission limitations.

7. If the owner or operator uses a dry scrubber to comply with the emission limitations, the owner or operator shall measure the injection rate of each sorbent during the performance testing. The operating limit for the injection rate of each sorbent is calculated as the lowest 1-hour average injection rate of each sorbent measured during the most recent performance test demonstrating compliance with the hydrogen chloride emission limitations. For energy recovery units, when the unit operates at lower loads, multiply the sorbent injection rate by the load fraction, as defined in this rule, to determine the required injection rate (e.g., for 50 percent load, multiply the injection rate operating limit by 0.5).

8. If the owner or operator does not use a wet scrubber, electrostatic precipitator, or fabric filter to comply with the emission limitation, and if the owner or operator does not determine compliance with the particulate matter emission limitation with either a particulate matter CEMS or a particulate matter CPMS, the owner or operator shall maintain opacity to less than or equal to ten percent opacity (1-hour block average).

9. If the owner or operator uses a PM CPMS to demonstrate compliance, the owner or operator shall establish a PM CPMS operating limit and determine compliance with it according to subparagraphs (b)9.((i) through (v) of this paragraph below.

(i) During the initial performance test or any such subsequent performance test that demonstrates compliance with the PM limit, record all hourly average output values (milliamps or the digital signal equivalent) from the PM CPMS for the periods corresponding to the test runs (e.g., three 1-hour average PM CPMS output values for three 1-hour test runs).

(I) The owner or operator's PM CPMS shall provide a 4-20 milliamp output, or the digital signal equivalent, and the establishment of its relationship to manual reference method measurements shall be determined in units of milliamps or digital bits.

(II) The owner or operator's PM CPMS operating range shall be capable of reading PM concentrations from zero to a level equivalent to at least two times the allowable emission limit. If the owner or operator's PM CPMS is an auto ranging instrument capable of multiple scales, the primary range of the instrument shall be capable of reading PM concentrations from zero to a level equivalent to two times the allowable emission limit.

(III) During the initial performance test or any such subsequent performance test that demonstrates compliance with the PM limit, record and average all milliamp output values, or their digital equivalent, from the PM CPMS for the periods corresponding to the compliance test runs (e.g., average all the PM CPMS output values for three corresponding 2-hour Method 51 test runs).

(ii) If the average of the three PM performance test runs are below 75% of the PM emission limit, the owner or operator shall calculate an operating limit by establishing a relationship of PM CPMS signal to PM concentration using the PM CPMS instrument zero, the average PM CPMS output values corresponding to the three compliance test runs, and the average PM concentration from the Method 5 or performance test with the procedures in subparagraphs (b)9.(i) through (v) of this paragraph.

(I) Determine the instrument zero output with one of the following procedures:

I. Zero point data for *in-situ* instruments shall be obtained by removing the instrument from the stack and monitoring ambient air on a test bench.

II. Zero point data for extractive instruments shall be obtained by removing the extractive probe from the stack and drawing in clean ambient air.

III. The zero point can also be obtained by performing manual reference method measurements when the flue gas is free of PM emissions or contains very low PM concentrations (e.g., when the process is not operating, but the fans are operating or the source is combusting only natural gas) and plotting these with the compliance data to find the zero intercept.

IV. If none of the steps in subparagraphs (b)9.(ii)(I) through (III) of this paragraph are possible, the owner or operator shall use a zero output value provided by the manufacturer.

(II) Determine the PM CPMS instrument average in milliamps, or the digital equivalent, and the average of the corresponding three PM compliance test runs, using Equation 1 of this rule:

(Eq. 1)

$$\bar{x} = \frac{1}{n}\sum_{i=1}^{n} X_1 \ , y = \frac{1}{n}\sum_{i=1}^{n} Y_1$$

Where:

X_1 = the PM CPMS data points for the three runs constituting the performance test;

Y_1 = the PM concentration value for the three runs constituting the performance test; and

n = the number of data points.

(III) With the instrument zero expressed in milliamps, or the digital equivalent, the three run average PM CPMS milliamp value, or its digital equivalent, and the three run average PM concentration from the three compliance tests, determine a relationship of mg/dscm per milliamp, or digital equivalent, with Equation 2 of this rule:

$$\text{(Eq. 2) } R = \frac{Y_1}{(X_1 - z)}$$

Where:

R = the relative mg/dscm per milliamp, or the digital equivalent, for the PM CPMS;

Y_1 = the three run average mg/dscm PM concentration;

X_1 = the three run average milliamp output, or the digital equivalent, from the PM CPMS; and

z = the milliamp or digital signal equivalent of the instrument zero determined from subparagraph (b)9.(ii)(I) of this paragraph.

(IV) Determine the source specific 30-day rolling average operating limit using the mg/dscm per milliamp value, or per digital signal equivalent, from Equation 2 in Equation 3, below. This sets the operating limit at the PM CPMS output value corresponding to 75% of the emission limit.

$$\text{(Eq. 3) } O_1 = z + \frac{0.75(L)}{R}$$

Where:

O_1 = the operating limit for the PM CPMS on a 30-day rolling average, in milliamps;

L = the source emission limit expressed in mg/dscm;

z = the instrument zero in milliamps or digital equivalent, determined from subparagraph (b)9.(ii)(I) of this paragraph; and

R = the relative mg/dscm per milliamp, or per digital signal output equivalent, for the PM CPMS, from Equation 2 of this rule.

(iii) If the average of the three PM compliance test runs is at or above 75% of the PM emission limit the owner or operator shall determine the operating limit by averaging the PM CPMS milliamp or digital signal output corresponding to the three PM performance test runs that demonstrate compliance with the emission limit using Equation 4 and shall submit all compliance test and PM CPMS data according to the reporting requirements in subparagraph (b)9.(v) of this paragraph.

(Eq. 4)

$$O_h = \frac{1}{n}\sum_{i=1}^{n} X_1$$

Where:

X_1 = the PM CPMS data points for all runs i; n = the number of data points; and

O_h = the site specific operating limit, in milliamps or digital signal equivalent.

(iv) To determine continuous compliance, the owner or operator shall record the PM CPMS output data for all periods when the process is operating and the PM CPMS is not out-of-control. The owner or operator shall demonstrate continuous compliance by using all quality-assured hourly average data collected by the PM CPMS for all operating hours to calculate the arithmetic average operating parameter in units of the operating limit (e.g., milliamps or digital signal bits, PM concentration, raw data signal) on a 30-day rolling average basis.

(v) For PM performance test reports used to set a PM CPMS operating limit, the electronic submission of the test report shall also include the make and model of the PM CPMS instrument, serial number of the instrument, analytical principle of the instrument (e.g., beta attenuation), span of the instruments primary analytical range, milliamp or digital signal value equivalent to the instrument zero output, technique by which this zero value was determined, and the average milliamp or digital signals corresponding to each PM compliance test run.

(c) If the owner or operator uses an air pollution control device other than a wet scrubber, activated carbon injection, selective noncatalytic reduction, fabric filter, an electrostatic precipitator, or a dry scrubber or limit emissions in some other manner, including mass balances, to comply with the emission limitations under subparagraph (a) of this paragraph, the owner or operator shall petition the Administrator for specific operating limits to be established during the initial performance test and continuously monitored thereafter. The owner or operator shall submit the petition at least sixty days before the performance test is scheduled to begin. The petition shall include the five items listed in subparagraphs (c)1. through 5. of this paragraph below.

1. Identification of the specific parameters the owner or operator proposes to use as additional operating limits.

2. A discussion of the relationship between these parameters and emissions of regulated pollutants, identifying how emissions of regulated pollutants change with changes in these parameters, and how limits on these parameters will serve to limit emissions of regulated pollutants.

3. A discussion of how the owner or operator will establish the upper and/or lower values for these parameters which will establish the operating limits on these parameters.

4. A discussion identifying the methods the owner or operator will use to measure and the instruments that will be used to monitor these parameters, as well as the relative accuracy and precision of these methods and instruments.

5. A discussion identifying the frequency and methods for recalibrating the instruments that will be used for monitoring these parameters.

(7) Performance Testing.

(a) All performance tests shall consist of a minimum of three test runs conducted under conditions representative of normal operations.

(b) The owner or operator shall document that the waste burned during the performance test is representative of the waste burned under normal operating conditions by maintaining a log of the quantity of waste burned (as required in paragraph (11) of this rule) and the types of waste burned during the performance test.

(c) All performance tests shall be conducted using the minimum run duration specified in Table 1 and Tables 5 through 8 of this rule.

(d) Method 1 of Appendix A, 40 CFR 60 shall be used to select the sampling location and number of traverse points.

(e) Method 3A or 3B of Appendix A, 40 CFR 60 shall be used for gas composition analysis, including measurement of oxygen concentration. Method 3A or 3B of Appendix A, 40 CFR 60 shall be used simultaneously with each method (except when using Method 9 and Method 22).

(f) All pollutant concentrations, except for opacity, shall be adjusted to 7 percent oxygen using Equation 5 of this rule:

$$\text{(Eq. 5)}\ C_{adj} = C_{meas}(20.9 - 7)/(20.9 - \%O_2)$$

Where:

C_{adj} = pollutant concentration adjusted to 7 percent oxygen;
C_{meas} = pollutant concentration measured on a dry basis; (20.9 - 7) = 20.9 percent oxygen - 7 percent oxygen (defined oxygen correction basis);
20.9 = oxygen concentration in air, percent; and
$\%O_2$ = oxygen concentration measured on a dry basis, percent.

(g) The owner or operator shall determine dioxins/furans toxic equivalency by following the procedures in subparagraphs (g)1. through 4. of this paragraph below.

1. Measure the concentration of each dioxin/furan tetra- through octa-isomer emitted using EPA Method 23 at 40 CFR part 60, Appendix A.

2. Quantify isomers meeting identification criteria 2, 3, 4, and 5 in Section 5.3.2.5 of Method 23, regardless of whether the isomers meet identification criteria 1 and 7. The owner or operator shall quantify the isomers per Section 9.0 of Method 23. (Note: the owner or operator may reanalyze the sample aliquot or split to reduce the number of isomers not meeting identification criteria 1 or 7 of Section 5.3.2.5)

3. For each dioxin/furan (tetra- through octa-chlorinated) isomer measured in accordance with subparagraph (g)1. and 2. of this paragraph above, multiply the isomer concentration by its corresponding toxic equivalency factor specified in Table 3 of this rule.

4. Sum the products calculated in accordance with subparagraph (g)3. of this paragraph above to obtain the total concentration of dioxins/furans emitted in terms of toxic equivalency.

(h) Method 22 at 40 CFR part 60, appendix A-7 shall be used to determine compliance with the fugitive ash emission limit in table 1 of this rule or tables 5 through 8 of this rule.

(i) If the owner or operator has an applicable opacity operating limit, the owner or operator shall determine compliance with the opacity limit using Method 9 at 40 CFR part 60, appendix A-4, based on three 1-hour blocks consisting of ten 6-minute average opacity values, unless the owner or operator is required to install a continuous opacity monitoring system, consistent with paragraphs (9) and (10).

(j) The owner or operator shall determine dioxins/furans total mass basis by following the procedures in subparagraphs (j)1. through 3. of this paragraph below.

1. Measure the concentration of each dioxin/furan tetra- through octa-chlorinated isomer emitted using EPA Method 23 at 40 CFR part 60, appendix A- 7.

2. Quantify isomers meeting identification criteria 2, 3, 4, and 5 in Section 5.3.2.5 of Method 23, regardless of whether the isomers meet identification criteria 1 and 7. The owner or operator shall quantify the isomers per Section 9.0 of Method 23. (Note: The owner or operator may reanalyze the sample aliquot or split to reduce the number of isomers not meeting identification criteria 1 or 7 of Section 5.3.2.5).

3. Sum the quantities measured in accordance with subparagraphs (j)1. and 2. of this paragraph to obtain the total concentration of dioxins/furans emitted in terms of total mass basis.

(k) The results of performance tests are used to demonstrate compliance with the emission limitations in Table 1 or tables 5 through 8 of this rule.

(8) Initial Compliance Requirements.

(a) The owner or operator shall conduct a performance test, as required under paragraphs (6) and (7) of this rule, to determine compliance with the emission limitations in Table 1 and tables 5 through 8 of this rule, to establish

compliance with any opacity operating limits in subparagraph (6)(b) of this rule, to establish the kiln-specific emission limit in subparagraph (9)(y) of this rule, as applicable, and to establish operating limits using the procedures in subparagraphs (6)(b) or (6)(c) of this rule. The performance test shall be conducted using the test methods listed in Table 1 and table 5 through 8 of this rule and the procedures in paragraph (7) of this rule. The use of the bypass stack during a performance test shall invalidate the performance test. As an alternative to conducting a performance test, as required under subparagraphs (6) and (7), the owner or operator shall use a 30-day rolling average of the 1-hour arithmetic average CEMS data, including CEMS data during startup and shutdown as defined in this rule, to determine compliance with the emission limitations in Table 1 or tables 5 through 8 of this rule. The owner or operator shall conduct a performance evaluation of each continuous monitoring system within 180 days of installation of the monitoring system. The initial performance evaluation shall be conducted prior to collecting CEMS data that will be used for the initial compliance demonstration.

(b) The initial performance test shall be conducted no later than 180 days after the final compliance date. The final compliance date is specified in subparagraph (3)(a)2. of this rule.

(c) If the owner or operator commences or recommences combusting a solid waste at an existing combustion unit at any commercial or industrial facility and conducted a test consistent with the provisions of this rule while combusting the given solid waste within the 6 months preceding the reintroduction of that solid waste in the combustion chamber, retesting is not needed until 6 months from the date the solid waste is reintroduced.

(d) If the owner or operator commences combusting or recommences combusting a solid waste at an existing combustion unit at any commercial or industrial facility and has not conducted a performance test consistent with the provisions of this rule while combusting the given solid waste within the 6 months preceding the reintroduction of that solid waste in the combustion chamber, the owner or operator shall conduct a performance test within 60 days commencing or recommencing solid waste combustion.

(e) The initial air pollution control device inspection shall be conducted within 60 days after installation of the control device and the associated CISWI reaches the charge rate at which it will operate, but no later than 180 days after the final compliance date for meeting the amended emission limitations.

(f) Within 10 operating days following an air pollution control device inspection, all necessary repairs shall be completed unless the owner or operator obtains written approval from the Director establishing a date whereby all necessary repairs of the designated facility shall be completed.

(g) If the owner or operator of a waste-burning kiln chooses to comply with the equivalent production-based mercury emission limit in Table 7 , initial compliance shall be demonstrated pursuant to 40 CFR § 63.1348(a)(5). The initial compliance test must begin on the first operating day following completion of the field testing and data collection that demonstrates that the continuous emissions monitoring system has satisfied the relevant performance acceptance criteria of Performance Specifications 12A or 12B of Appendix B of 40 CFR Part 60. The notification required by subparagraph (11)(aa) of this rule shall also include the

owner or operators intention to comply with the equivalent production-based mercury emission limit in Table 7. For waste-burning kilns choosing to comply with the equivalent production-based mercury emission limit in Table 7, the term operating day in 40 CFR § 63.1348(a)(5), 40 CFR § 63.1348(b)(7) and 40 CFR § 63.1349(b)(5) means any 24-hour period beginning at 12:00 midnight during which the kiln produces any amount of clinker.

(9) Continuous Compliance Requirements.

(a) Compliance with standards.

1. The emission standards and operating requirements set forth in this rule apply at all times.

2. If the combusting of solid waste is ceased the owner or operator may opt to remain subject to the provisions of this rule. Consistent with the definition of CISWI, the owner or operator is subject to the requirements of this rule at least 6 months following the last date of solid waste combustion. Solid waste combustion is ceased when sold waste is not in the combustion chamber (i.e., the solid waste feed to the combustor has been cut off for a period of time not less than the solid waste residence time).

3. If the combusting of solid waste is ceased the owner or operator shall be in compliance with any newly applicable standards on the effective date of the waste-to-fuel switch. The effective date of the waste-to-fuel switch is a date selected by the owner or operator, that shall be at least 6 months from the date that combusting solid waste is ceased, consistent with subparagraph (9)(a)2. of this paragraph above. The source shall remain in compliance with this rule until the effective date of the waste-to-fuel switch.

4. Any owner or operator of an existing commercial or industrial combustion unit that combusted a fuel or no-waste material, and commences or recommences combustion of solid waste, the owner or operator is subject to the provisions of this rule as of the first day solid waste is introduced or reintroduced to the combustion chamber, and this date constitutes the effective date of the fuel-to-waste switch. The owner or operator shall complete all initial compliance demonstrations for any Section 112 standards that are applicable to the facility before commencing or recommencing combustion of solid waste. The owner or operator shall provide 30 days prior notice of the effective date of the waste-to- fuel switch. The notification shall identify:

(i) The name of the owner or operator of the CISWI, the location of the source, the emissions unit(s) that will cease burning solid waste, and the date of the notice;

(ii) The currently applicable subcategory under this rule, and any 40 CFR part 63 subpart and subcategory that will be applicable after the combusting of solid waste is ceased;

(iii) The fuel(s), non-waste material(s) and solid waste(s) the CISWI is currently combusting and has combusted over the past 6 months, and the fuel(s) or non-waste materials the unit will commence combusting;

(iv) The date on which the unit became subject to the currently applicable emission limits;

(v) The date upon which combusting solid waste is ceased, and the date (if different) that any new requirements to become applicable (i.e., the effective date of the waste-to-fuel switch), consistent with subparagraphs (9)(a)2. and 3. of this paragraph.

5. All air pollution control equipment necessary for compliance with any newly applicable emissions limits which apply as a result of the cessation or commencement or recommencement of combusting solid waste shall be installed and operational as of the effective date of the waste-to-fuel, or fuel-to-waste switch.

6. All monitoring systems necessary for compliance with any newly applicable monitoring requirements which apply as a result of the cessation or commencement or recommencement of combusting solid waste shall be installed and operational as of the effective date of the waste-to-fuel, or fuel-to-waste switch. All calibration and drift checks shall be performed as of the effective date of the waste-to-fuel, or fuel-to waste switch. Relative accuracy tests shall be performed as of the performance test deadline for PM CEMS (if PM CEMS are elected to demonstrate continuous compliance with the particulate matter emission limits). Relative accuracy testing for other CEMS need not be repeated if that testing was previously performed consistent with section 112 monitoring requirements or monitoring requirements under this rule.

(b) The owner or operator shall conduct an annual performance test for the pollutants listed in table 1 or tables 5 through 8 of this rule and opacity for each CISWI as required under paragraph (7) of this rule. The annual performance test shall be conducted using the test methods listed in Table 1 or table 5 through 8 of this rule and the procedures in paragraph (7) of this rule. Opacity shall be measured using EPA Reference Method 9 at 40 CFR part 60. Annual performance tests are not required if the owner or operator uses CEMS or continuous opacity monitoring systems to determine compliance.

(c) The owner or operator shall continuously monitor the operating parameters specified in subparagraph (6)(b) or established under subparagraph (6)(c) of this rule and as specified in subparagraph (10)(d) of this rule. Operation above the established maximum or below the established minimum operating limits constitutes a deviation from the established operating limits. Three-hour block average values are used to determine compliance (except for baghouse leak detection system alarms) unless a different averaging period is established under subparagraph (6)(c) of this rule or, for energy recovery units, where the averaging time for each operating parameter is a 30-day rolling, calculated each hour as the average of the previous 720 operating hours. Operation above the established maximum, below the established minimum, or outside the allowable range of the operating limits specified in subparagraph (9)(a) of this paragraph constitutes a deviation from the operating limits established under this rule, except during performance tests conducted to determine compliance with the emission and operating limits or to establish new operating limits. Operating limits are confirmed or reestablished during performance tests.

(d) The owner or operator shall burn only the same types of waste and fuels used to establish subcategory applicability (for ERUs) and operating limits during the performance test.

(e) For energy recovery units, incinerators, and small remote units, the owner or operator shall perform annual visual emissions test for ash handling.

(f) For energy recovery units, the owner or operator shall conduct an annual performance test for opacity using EPA Reference Method 9 at 40 CFR part 60 (except where particulate matter continuous monitoring system or CPMS are used) and the pollutants listed in table 6 of this rule.

(g) For facilities using a CEMS to demonstrate compliance with the carbon monoxide emission limit, compliance with the carbon monoxide emission limit may be demonstrated by using the CEMS, as described in subparagraph (10)(o) of this rule.

(h) Coal and liquid/gas energy recovery units with annual average heat input rates greater than 250 MMBtu/hr may elect to demonstrate continuous compliance with the particulate matter emissions limit using a particulate matter CEMS according to the procedures in subparagraph (10)(n) of this rule, instead of the CPMS specified in subparagraph (9)(i) of this paragraph. Coal and liquid/gas energy recovery units with annual average heat input rates less than 250 MMBtu/hr, incinerators, and small remote incinerators may also elect to demonstrate compliance using a particulate matter CEMS according to the procedures in subparagraph (10)(n) of this rule, instead of particulate matter testing with EPA Method 5 at 40 CFR part 60, appendix A-3 and, if applicable, the continuous opacity monitoring requirements in subparagraph (9)(i) of this paragraph.

(i) For energy recovery units with annual average heat input rates greater than or equal to 10 MMBtu/hour but less than 250 MMBtu/hr that do not use a wet scrubber, fabric filter with bag leak detection system, an electrostatic precipitator, particulate matter CEMS, or particulate matter CPMS, the owner or operator shall install, operate, certify and maintain a continuous opacity monitoring system (COMS) according to the procedures in subparagraph (10)(m) of this rule.

(j) For waste-burning kilns, the owner or operator shall conduct an annual performance test for the pollutants (except mercury and particulate matter, and hydrogen chloride if no acid gas wet scrubber or dry scrubber is used) listed in table 7 of this rule, unless the owner or operator demonstrate initial and continuous compliance using CEMS as allowed in subparagraph (u) of this paragraph. If the waste-burning kiln is not equipped with an acid gas wet scrubber or dry scrubber, the owner or operator shall determine compliance with the hydrogen chloride emission limit using a HCl CEMS according to the requirements in subparagraph (j)1. of this rule. The owner or operator shall determine compliance with the mercury emissions limit using a mercury CEMS or an integrated sorbent trap monitoring system according to subparagraph (j)2. of this rule. The owner or operator shall determine compliance with particulate matter using CPMS:

1. If compliance is monitored with the HCl emissions limit by operating an HCl CEMS, the owner or operator shall do so in accordance with Performance Specification 15 (PS 15) of appendix B to 40 CFR part 60, or, PS 18 of appendix B to 40 CFR part 60. The owner or operator shall operate, maintain, and quality assure a HCl CEMS installed and certified under PS 15 according to the quality assurance requirements in Procedure 1 of appendix F to 40 CFR part 60 except that the

Relative Accuracy Test Audit requirements of Procedure 1 must be replaced with the validation requirements and criteria of sections 11.1.1 and 12.0 of PS 15. The owner or operator shall operate, maintain and quality assure a HCl CEMS installed and certified under PS 18 according to the quality assurance requirements in Procedure 6 of appendix F to 40 CFR part 60. For any performance specification used, the owner or operator shall use Method 321 of appendix A to 40 CFR part 63 as the reference test method for conducting relative accuracy testing. The span value and calibration requirements in subparagraphs (j)1.(i) and (ii) of this paragraph apply to all HCl CEMS used under this rule:

(i) The owner or operator shall use a measurement span value for any HCl CEMS of 0-10 ppmvw unless the monitor is installed on a kiln without an inline raw mill. Kilns without an inline raw mill may use a higher span value sufficient to quantify all expected emissions concentrations. The HCl CEMS data recorder output range must include the full range of expected HCl concentration values which would include those expected during "mill off" conditions. The corresponding data recorder range shall be documented in the site-specific monitoring plan and associated records; and

(ii) In order to quality assure data measured above the span value, the owner or operator shall use one of the three options in subparagraphs (j)1.(ii)(I) through (III) of this paragraph:

(I) Include a second span that encompasses the HCl emission concentrations expected to be encountered during "mill off" conditions. This second span may be rounded to a multiple of 5 ppm of total HCl. The requirements of the appropriate HCl monitor performance specification shall be followed for this second span with the exception that a RATA with the mill off is not required;

(II) Quality assure any data above the span value by proving instrument linearity beyond the span value established in subparagraph (j)1.(i) of this paragraph using the following procedure. Conduct a weekly "above span linearity" calibration challenge of the monitoring system using a reference gas with a certified value greater than the highest expected hourly concentration or greater than 75% of the highest measured hourly concentration. The "above span" reference gas must meet the requirements of the applicable performance specification and must be introduced to the measurement system at the probe. Record and report the results of this procedure as would be done for a daily calibration. The "above span linearity" challenge is successful if the value measured by the HCl CEMS falls within 10 percent of the certified value of the reference gas. If the value measured by the HCl CEMS during the above span linearity challenge exceeds 10 percent of the certified value of the reference gas, the monitoring system must be evaluated and repaired and a new "above span linearity" challenge met before returning the HCl CEMS to service, or data above span from the HCl CEMS must be subject to the quality assurance procedures established in (j)1.(ii)(IV) of this paragraph. In this manner values measured by the HCl CEMS during the above span linearity challenge exceeding ±20 percent of the certified value of the reference gas must be normalized using equation 6;

(III) Quality assure any data above the span value established in subparagraph (j)1.(i) of this paragraph using the following procedure. Any time two consecutive one-hour average measured concentration of HCl exceeds the span value the owner or operator shall, within 24 hours before or after, introduce a higher,

"above span" HCl reference gas standard to the HCl CEMS. The "above span" reference gas shall meet the requirements of the applicable performance specification and target a concentration level between 50 and 150 percent of the highest expected hourly concentration measured during the period of measurements above span, and shall be introduced at the probe. While this target represents a desired concentration range that is not always achievable in practice, it is expected that the intent to meet this range is demonstrated by the value of the reference gas. Expected values may include above span calibrations done before or after the above-span measurement period. Record and report the results of this procedure as would be done for a daily calibration. The "above span" calibration is successful if the value measured by the HCl CEMS is within 20 percent of the certified value of the reference gas. If the value measured by the HCl CEMS is not within 20 percent of the certified value of the reference gas, then the owner or operator shall normalize the stack gas values measured above span as described in paragraph (j)1.(ii)(IV) of this paragraph. If the "above span" calibration is conducted during the period when measured emissions are above span and there is a failure to collect the one data point in an hour due to the calibration duration, then the owner or operator shall determine the emissions average for that missed hour as the average of hourly averages for the hour preceding the missed hour and the hour following the missed hour. In an hour where an "above span" calibration is being conducted and one or more data points are collected, the emissions average is represented by the average of all valid data points collected in that hour; and

(IV) In the event that the "above span" calibration is not successful (*i.e.,* the HCl CEMS measured value is not within 20 percent of the certified value of the reference gas), then the owner or operator shall normalize the one-hour average stack gas values measured above the span during the 24-hour period preceding or following the "above span" calibration for reporting based on the HCl CEMS response to the reference gas as shown in equation 6:

$$\text{(Eq. 6)}\ \frac{Certified\ reference\ gas\ value}{Measured\ value\ of\ reference\ gas} = Measured\ stack\ gas = Normalized\ stack\ gas\ result$$

2. Compliance with the mercury emissions limit must be determined using a mercury CEMS or integrated sorbent trap monitoring system according to the following requirements:

(i) The owner or operator shall operate a mercury CEMS in accordance with performance specification 12A at 40 CFR part 60, appendix B or an integrated sorbent trap monitoring system in accordance with performance specification 12B at 40 CFR part 60, appendix B; these moniroting systems shall be quality assured according to procedure 5 of 40 CFR 60, appendix F. For the purposes of emissions calculations when using an integrated sorbent trap monitoring system, the mercury concentration determined for each sampling period shall be assigned to each hour during the sampling period. If the owner or operator choose to comply with the production-rate based mercury limit for the waste-burning kiln, the owner or operator shall monitor hourly clinker production and determine the hourly mercury emissions rate in pounds per million ton of clinker produced. The owner or operator shall demonstrate compliance with the mercury emissions limit using a 30-day rolling average of these 1-hour mercury concentrations or mass emissions rates, including CEMS data during startup and shutdown as defined in this subpart, calculated using equation 19-19 in section 12.4.1 of EPA Reference Method 19 at 40 CFR part 60,

appendix A-7. CEMS data during startup and shutdown, as defined in this rule, are not corrected to 7 percent oxygen, and are measured at stack oxygen content;

(ii) Owners or operators using a mercury CEMS or integrated sorbent trap monitoring system to determine mass emission rate shall install, operate, calibrate and maintain an instrument for continuously measuring and recording the mercury mass emissions rate to the atmosphere according to the requirements of performance specification 6 at 40 CFR part 60, appendix B and conducting an annual relative accuracy test of the continuous emission rate monitoring system according to section 8.2 of performance specification 6; and

(iii) The owner or operator of a waste-burning kiln shall demonstrate initial compliance by operating a mercury CEMS or integrated sorbent trap monitoring system while the raw mill of the in-line kiln/raw mill is operating under normal conditions and including at least one period when the raw mill is off.

(k) If the owner or operators uses an air pollution control device to meet the emission limitations in this rule, an initial and annual inspection of the air pollution control device shall be conducted. The inspection shall include, at a minimum, the following:

1. Inspect air pollution control device(s) for proper operation.

2. Develop a site-specific monitoring plan according to the requirements in subparagraph (9)(l) of this paragraph. This requirement also applies if the owner or operator petition the Administrator for alternative monitoring parameters under §60.13(i) of 40 CFR part 60.

(l) For each CMS required in this paragraph, the owner or operator shall develop and submit to the Administrator for approval a site-specific monitoring plan according to the requirements of this subparagraph (l) that addresses subparagraphs (9)(l)1.(i) through (vi) of this paragraph.

1. The owner or operator shall submit this site-specific monitoring plan at least 60 days before the initial performance evaluation of the continuous monitoring system.

(i) Installation of the continuous monitoring system sampling probe or other interface at a measurement location relative to each affected process unit such that the measurement is representative of control of the exhaust emissions (e.g., on or downstream of the last control device).

(ii) Performance and equipment specifications for the sample interface, the pollutant concentration or parametric signal analyzer and the data collection and reduction systems.

(iii) Performance evaluation procedures and acceptance criteria (e.g., calibrations).

(iv) Ongoing operation and maintenance procedures in accordance with the general requirements of §60.11(d).

(v) Ongoing data quality assurance procedures in accordance with the general requirements of §60.13.

(vi) Ongoing recordkeeping and reporting procedures in accordance with the general requirements of §60.7(b), (c), (c)(1), (c)(4), (d), (e), (f) and (g).

2. The owner or operator shall conduct a performance evaluation of each continuous monitoring system in accordance with the site-specific monitoring plan.

3. The owner or operator shall operate and maintain the continuous monitoring system in continuous operation according to the site-specific monitoring plan.

(m) If the owner or operator has an operating limit that requires the use of a flow monitoring system, the owner or operator shall meet the requirements in subparagraphs (9)(l) and (9)(m)1. through 4. of this paragraph.

1. Install the flow sensor and other necessary equipment in a position that provides a representative flow.

2. Use a flow sensor with a measurement sensitivity at full scale of no greater than 2 percent.

3. Minimize the effects of swirling flow or abnormal velocity distributions due to upstream and downstream disturbances.

4. Conduct a flow monitoring system performance evaluation in accordance with the monitoring plan at the time of each performance test but no less frequently than annually.

(n) If the owner or operator has an operating limit that requires the use of a pressure monitoring system, the owner or operator shall meet the requirements in subparagraphs (9)(l) and (9)(n)1. through 6. Of this paragraph.

1. Install the pressure sensor(s) in a position that provides a representative measurement of the pressure (e.g., PM scrubber pressure drop).

2. Minimize or eliminate pulsating pressure, vibration, and internal and external corrosion.

3. Use a pressure sensor with a minimum tolerance of 1.27 centimeters of water or a minimum tolerance of 1 percent of the pressure monitoring system operating range, whichever is less.

4. Perform checks at the frequency outlined in the site-specific monitoring plan to ensure pressure measurements are not obstructed (e.g., check for pressure tap pluggage daily).

5. Conduct a performance evaluation of the pressure monitoring system in accordance with the monitoring plan at the time of each performance test but no less frequently than annually.

6. If at any time the measured pressure exceeds the manufacturer's specified maximum operating pressure range, conduct a performance evaluation of the pressure monitoring system in accordance with the monitoring plan and confirm that the pressure monitoring system continues to meet the performance requirements in the monitoring plan. Alternatively, install and verify the operation of a new pressure sensor.

(o) If the owner or operator has an operating limit that requires a pH monitoring system, the owner or operator shall meet the requirements in subparagraphs (9)(l) and (9)(o)1. through 4. of this paragraph.

1. Install the pH sensor in a position that provides a representative measurement of scrubber effluent pH.

2. Ensure the sample is properly mixed and representative of the fluid to be measured.

3. Conduct a performance evaluation of the pH monitoring system in accordance with the monitoring plan at least once each process operating day.

4. Conduct a performance evaluation (including a two-point calibration with one of the two buffer solutions having a pH within 1 of the pH of the operating limit) of the pH monitoring system in accordance with the monitoring plan at the time of each performance test but no less frequently than quarterly.

(p) If the owner or operator has an operating limit that requires a secondary electric power monitoring system for an electrostatic precipitator, the owner or operator shall meet the requirements in subparagraphs (9)(l) and (9)(p)1. through 2. of this paragraph.

1. Install sensors to measure (secondary) voltage and current to the precipitator collection plates.

2. Conduct a performance evaluation of the electric power monitoring system in accordance with the monitoring plan at the time of each performance test but no less frequently than annually.

(q) If the owner or operator has an operating limit that requires the use of a monitoring system to measure sorbent injection rate (e.g., weigh belt, weigh hopper, or hopper flow measurement device), the owner or operator shall meet the requirements in subparagraphs (9)(l) and (9)(q)1. though 2. of this paragraph.

1. Install the system in a position(s) that provides a representative measurement of the total sorbent injection rate.

2. Conduct a performance evaluation of the sorbent injection rate monitoring system in accordance with the monitoring plan at the time of each performance test but no less frequent than annually.

(r) If the owner or operator elect to use a fabric filter bag leak detection system to comply with the requirements of this rule, the owner or operator shall

install, calibrate, maintain, and continuously operate a bag leak detection system as specified in subparagraphs (9)(l) and (9)(r)1. though 5. of this paragraph.

1. Install a bag leak detection sensor(s) in a position(s) that will be representative of the relative or absolute particulate matter loadings for each exhaust stack, roof vent, or compartment (e.g., for a positive pressure fabric filter) of the fabric filter.

2. Use a bag leak detection system certified by the manufacturer to be capable of detecting particulate matter emissions at concentrations of 10 milligrams per actual cubic meter or less.

3. Conduct a performance evaluation of the bag leak detection system in accordance with the monitoring plan and consistent with the guidance provided in EPA-454/R-98-015 (incorporated by reference, see §60.17).

4. Use a bag leak detection system equipped with a device to continuously record the output signal from the sensor.

5. Use a bag leak detection system equipped with a system that will sound an alarm when an increase in relative particulate matter emissions over a preset level is detected. The alarm shall be located where it is observed readily by plant operating personnel.

(s) For facilities using a CEMS to demonstrate initial and continuous compliance with the sulfur dioxide emission limit, compliance with the sulfur dioxide emission limit may be demonstrated by using the CEMS specified in paragraph (10)(l) of this rule to measure sulfur dioxide. . The sulfur dioxide CEMS shall follow the procedures and methods specified in this subparagraph. For sources that have actual inlet emissions less than 100 parts per million dry volume, the relative accuracy criterion for inlet sulfur dioxide CEMS should be no greater than 20 percent of the mean value of the reference method test data in terms of the units of the emission standard, or 5 parts per million dry volume absolute value of the mean difference between the reference method and the CEMS, whichever is greater.

1. During each relative accuracy test run of the CEMS required by performance specification 2 in appendix B of 40 CFR part 60, collect sulfur dioxide and oxygen (or carbon dioxide) data concurrently (or within a 30- to 60-minute period) with both the CEMS and the test methods specified in subparagraphs (9)(s)1.(i) and (ii) of this paragraph.

(i) For sulfur dioxide, EPA Reference Method 6 or 6C, or as an alternative ANSI/ASME PTC 19.10-1981 (incorporated by reference, see §60.17) shall be used.

(ii) For oxygen (or carbon dioxide), EPA Reference Method 3A or 3B, or as an alternative ANSI/ASME PTC 19.10-1981 (incorporated by reference, see §60.17), as applicable, shall be used.

2. The span value of the CEMS at the inlet to the sulfur dioxide control device shall be 125 percent of the maximum estimated hourly potential sulfur dioxide emissions of the unit subject to this rule. The span value of the CEMS at the

outlet of the sulfur dioxide control device shall be 50 percent of the maximum estimated hourly potential sulfur dioxide emissions of the unit subject to this rule.

3. Conduct accuracy determinations quarterly and calibration drift tests daily in accordance with procedure 1 in appendix F of 40 CFR part 60.

(t) For facilities using a CEMS to demonstrate initial and continuous compliance with the nitrogen oxides emission limit, compliance with the nitrogen oxides emission limit may be demonstrated by using the CEMS specified in paragraph (10)(k) to measure nitrogen oxides. The nitrogen oxides CEMS shall follow the procedures and methods specified in subparagraphs (9)(t)1. though 5. of this paragraph.

1. During each relative accuracy test run of the CEMS required by performance specification 2 of appendix B of 40 CFR part 60, collect nitrogen oxides and oxygen (or carbon dioxide) data concurrently (or with in a 30- to 60-minute period) with both the CEMS and the test methods specified in subparagraphs (9)(t)1.(i) and (ii) of this paragraph.

(i) For nitrogen oxides, EPA Reference Method 7 or 7E at 40 CFR part 60, appendix A-4 shall be used.

(ii) For oxygen (or carbon dioxide), EPA Reference Method 3A or 3B, or as an alternative ANSI/ASME PTC 19.10-1981 (incorporated by reference, see §60.17), as applicable, shall be used.

2. The span value of the CEMS shall be 125 percent of the maximum estimated hourly potential nitrogen oxide emissions of unit.

3. Conduct accuracy determinations quarterly and calibration drift tests daily in accordance with procedure 1 in appendix F of 40 CFR part 60.

4. The owner or operator of an affected facility may request that compliance with the nitrogen oxides emission limit be determined using carbon dioxide measurements corrected to an equivalent of 7 percent oxygen. If carbon dioxide is selected for use in diluents corrections, the relationship between oxygen and carbon dioxide levels shall be established during the initial performance test according to the procedures and methods specified in subparagraphs (9)(t)4.(i) though (iv) of this paragraph below. This relationship may be reestablished during performance compliance tests.

(i) The fuel factor equation in Method 3B shall be used to determine the relationship between oxygen and carbon dioxide at a sampling location. Method 3A, 3B, or as an alternative ANSI/ASME PTC 19.10-1981 (incorporated by reference, see §60.17), as applicable, shall be used to determine the oxygen concentration at the same location as the carbon dioxide monitor.

(ii) Samples shall be taken for at least 30 minutes in each hour.

(iii) Each sample shall represent a 1-hour average.

(iv) A minimum of 3 runs shall be performed.

(u) For facilities using a CEMS or an integrated sorbent trap monitoring system for mercury to demonstrate initial and continuous compliance with any of the emission limits of this rule, the owner or operator shall complete the following:

1. Demonstrate compliance with the appropriate emission limit(s) using a 30-day rolling average of 1-hour arithmetic average emission concentrations, including CEMS or an integrated sorbent trap monitoring system data during startup and shutdown, as defined in this rule, calculated using Equation 19-19 in section 12.4.1 of EPA Reference Method 19 at appendix A-7 of this part. The 1-hour arithmetic averages for CEMS shall be calculated using the data points required under § 60.13(e)(2). Except for CEMS or an integrated sorbent trap monitoring system data during startup and shutdown, the 1-hour arithmetic averages used to calculate the 30-day rolling average emission concentrations shall be corrected to 7 percent oxygen (dry basis). Integrated sorbent trap monitoring system or CEMS data during startup and shutdown, as defined in this rule, are not corrected to 7 percent oxygen, and are measured at stack oxygen content.

2. Operate all CEMS and integrated sorbent trap monitoring systems in accordance with the applicable procedures under appendices B and F of 40 CFR part 60.

(v) Use of the bypass stack at any time is an emissions standards deviation for PM, HCl, lead, cadmium, mercury, nitrogen oxides, sulfur dioxide, and dioxin/furans.

(w) For energy recovery units with a design heat input capacity of 100MMBtu/hr or greater that do not use a carbon monoxide CEMS, the owner or operator shall install, operate, and maintain an oxygen analyzer system as defined in paragraph (1) of this rule according to the procedures in subparagraph (9)(w)1. through 4. below.

1. The oxygen analyzer system shall be installed by the initial performance test date specified in subparagraph (6)(b) of this rule.

2. The owner or operator shall operate the oxygen trim system within compliance with subparagraph (9)(w)3. of this paragraph below at all times.

3. The owner or operator shall maintain the oxygen level such that the 30- day rolling average that is established as the operating limit for oxygen is not below the lowest hourly average oxygen concentration measured during the most recent CO performance test.

4. The owner or operator shall calculate and record a 30-day rolling average oxygen concentration using Equation 19-19 in section 12.4.1 of EPA Reference Method 19 of Appendix A-7 of 40 CFR part 60.

(x) For energy recovery units with annual average heat input rates greater than or equal to 250 MMBtu/hr and waste-burning kilns, the owner or operator shall install, calibrate, maintain, and operate a PM CPMS and record the output of the system as specified in subparagraphs (9)(x)1. through 8. of this paragraph below. For other energy recovery units, the owner or operator may elect to use PM CPMS operated in accordance with this paragraph. PM CPMS are

suitable in lieu of using other CMS for monitoring PM compliance (e.g., bag leak detectors, ESP secondary power, PM scrubber pressure).

1. Install, calibrate, operate, and maintain the PM CPMS according to the procedures in the approved site-specific monitoring plan developed in accordance with subparagraphs (9)(l) and (9)(x)1.(i) through (iii) of this paragraph.

(i) The operating principle of the PM CPMS shall be based on in-stack or extractive light scatter, light scintillation, beta attenuation, or mass accumulation of the exhaust gas or representative sample. The reportable measurement output from the PM CPMS shall be expressed as milliamps.

(ii) The PM CPMS shall have a cycle time (i.e., period required to complete sampling, measurement, and reporting for each measurement) no longer than 60 minutes.

(iii) The PM CPMS shall be capable of detecting and responding to particulate matter concentrations of no greater than 0.5 mg/actual cubic meter.

2. During the initial performance test or any such subsequent performance test that demonstrates compliance with the PM limit, the owner or operator shall adjust the site-specific operating limit in accordance with the results of the performance test according to the procedures specified in subparagraph (6)(b) of this rule.

3. Collect PM CPMS hourly average output data for all energy recovery unit or waste-burning kiln operating hours. Express the PM CPMS output as milliamps.

4. Calculate the arithmetic 30-day rolling average of all of the hourly average PM CPMS output collected during all energy recovery unit or waste-burning kiln operating hours data (milliamps).

5. The owner or operator shall collect data using the PM CPMS at all times the energy recovery unit or waste-burning kiln is operating and at the intervals specified in subparagraph (9)(x)1.(ii) of this paragraph, except for periods of monitoring system malfunctions, repairs associated with monitoring system malfunctions, required monitoring system quality assurance or quality control activities (including, as applicable, calibration checks and required zero and span adjustments), and any scheduled maintenance as defined in the site-specific monitoring plan.

6. The owner or operator shall use all the data collected during all energy recovery unit or waste-burning kiln operating hours in assessing the compliance with the operating limit except:

(i) Any data collected during monitoring system malfunctions, repairs associated with monitoring system malfunctions, or required monitoring system quality assurance or quality control activities conducted during monitoring system malfunctions are not used in calculations (report any such periods in the annual deviation report);

(ii) Any data collected during periods when the monitoring system is out of control as specified in your site-specific monitoring plan, repairs associated with periods when the monitoring system is out of control, or required monitoring system quality assurance or quality control activities conducted during out-of-control periods are not used in calculations (report emissions or operating levels and report any such periods in the annual deviation report);

(iii) Any PM CPMS data recorded during periods of CEMS data during startup and shutdown, as defined in this rule.

7. The owner or operator shall record and make available upon request results of PM CPMS system performance audits, as well as the dates and duration of periods from when the PM CPMS is out of control until completion of the corrective actions necessary to return the PM CPMS to operation consistent with the site-specific monitoring plan.

8. For any deviation of the 30-day rolling average PM CPMS average value from the established operating parameter limit, the owner or operator shall:

(i) Within 48 hours of the deviation, visually inspect the air pollution control device;

(ii) If inspection of the air pollution control device identifies the cause of the deviation, take corrective action as soon as possible and return the PM CPMS measurement to within the established value; and

(iii) Within 30 days of the deviation or at the time of the annual compliance test, whichever comes first, conduct a PM emissions compliance test to determine compliance with the PM emissions limit and to verify. Within 45 days of the deviation, the owner or operator shall re-establish the CPMS operating limit. Conducting of additional testing for any deviations that occur between the time of the original deviation and the PM emissions compliance test required under this subparagraph is not required.

(iv) PM CPMS deviations leading to more than four required performance tests in a 12-month process operating period (rolling monthly) constitute a violation of this rule.

(y) When there is an alkali bypass and/or an in-line coal mill that exhaust emissions through a separate stack(s), the combined emissions are subject to the emission limits applicable to waste-burning kilns. To determine the kiln-specific emission limit for demonstrating compliance, the owner or operator shall:

1. Calculate a kiln-specific emission limit using equation 7:

(Eq. 7) $C_{ks} = ((Emission\ Limit\ X\ (Q_{ab} + Q_{cm} + Q_{ks})) - (Q_{ab}\ X\ C_{ab}) - (Q_{cm}\ X\ C_{cm}))/Q_{ks}$

Where:

C_{ks} = Kiln stack concentration (ppmvd, mg/dscm, ng/dscm, depending on pollutant. Each corrected to 7% O2.)

Q_{ab} = Alkali bypass flow rate (volume/hr)

C_{ab} = Alkali bypass concentration (ppmvd, mg/dscm, ng/dscm, depending on pollutant. Each corrected to 7% O2.)

Q_{cm} = In-line coal mill flow rate (volume/hr)

C_{cm} = In-line coal mill concentration (ppmvd, mg/dscm, ng/dscm, depending on pollutant. Each corrected to 7% O2.)

Q_{ks} = Kiln stack flow rate (volume/hr)

2. Particulate matter concentration shall be measured downstream of the in-line coal mill. All other pollutant concentrations shall be measured either upstream or downstream of the in-line coal mill.

3. For purposes of determining the combined emissions from kilns equipped with an alkali bypass or that exhaust kiln gases to a coal mill that exhausts through a separate stack, instead of installing a CEMS or PM CPMS on the alkali bypass stack or in-line coal mill stack, the results of the initial and subsequent performance test can be used to demonstrate compliance with the relevant emissions limit. A performance test shall be conducted on an annual basis (between 11 and 13 calendar months following the previous performance test).

(z) The owner or operator shall conduct annual performance tests between 11 and 13 calendar months of the previous performance test.

(aa) On an annual basis (no more than 12 months following the previous annual air pollution control device inspection), the owner or operator shall complete the air pollution control device inspection as described in subparagraphs (8)(e) and (f) of this rule.

(bb) The owner or operator shall conduct annual performance tests according to the schedule specified in subparagraph (9)(z) in this paragraph, with the following exceptions:

1. The owner or operator may conduct a repeat performance test at any time to establish new values for the operating limits, as specified in subparagraphs (9)(cc) and (dd) of this paragraph. New operating limits become effective on the date that the performance test report is submitted to the EPA's Central Data Exchange or postmarked, per the requirements of (11)(hh). The Director may request a repeat performance test at any time.

2. The owner or operator shall repeat the performance test within 60 days of a process change, as defined in paragraph (1) of this rule.

3. Performance tests may be conducted less often if the owner or operator meet the following conditions: the performance tests for the pollutant for at least 2 consecutive performance tests demonstrates that the emission level for the pollutant is no greater than the emission level specified in subparagraph (9)(bb)3.(i) or (bb)3.(ii) of this paragraph, as applicable; there are no changes in the operation of the affected source or air pollution control equipment that could increase emissions; and the owner or operator is not required to conduct a performance test for the pollutant in response to a request by the Director in subparagraph (9)(bb)1. of this paragraph or a process change in subparagraph (9)(bb)2. of this paragraph. In this case, the owner or operator do not have to conduct a performance test for that pollutant for the next 2 years. The owner or operator shall conduct a performance

test for the pollutant no more than 37 months following the previous performance test for the pollutant. If the emission level for the CISWI continues to meet the emission level specified in (9)(bb)3.(i) or (9)(bb)3.(ii) of this paragraph, as applicable, the owner or operator may choose to conduct performance tests for the pollutant every third year as long as there are no changes in the operation of the affected source or air pollution control equipment that could increase emissions. Each such performance test shall be conducted no more than 37 months after the previous performance test.

(i) For particulate matter, hydrogen chloride, mercury, carbon monoxide, nitrogen oxides, sulfur dioxide, cadmium, lead, and dioxins/furans, the emission level equal to 75 percent of the applicable emission limit in table 1 or tables 5 through 8 of this rule, as applicable.

(ii) For fugitive emissions, visible emissions (of combustion ash from the ash conveying system) for 2 percent of the time during each of the three 1-hour observation periods.

4. If the owner or operator is conducting less frequent testing for a pollutant as provided in subparagraph (9)(bb)3. of this paragraph and a subsequent performance test for the pollutant indicates that the CISWI does not meet the emission level specified in subparagraph (9)(bb)3.(i) or (9)(bb)3.(ii) of this paragraph, as applicable, the owner or operator shall conduct annual performance tests for the pollutant according to the schedule specified in subparagraph (9)(bb) of this paragraph until qualification for less frequent testing for the pollutant as specified in subparagraph (9)(bb)3. of this paragraph.

(cc) The owner or operator may conduct a repeat performance test at any time to establish new values for the operating limits. The Director may request a repeat performance test at any time.

(dd) The owner or operator shall repeat the performance test if the feed stream is different than the feed streams used during any performance test used to demonstrate compliance.

(ee) If the owner or operator of a waste-burning kiln chooses to comply with the equivalent production-based mercury emission limit in Table 7, continuous compliance shall be demonstrated pursuant to the procedures of 40 CFR § 63.1348(b)(7.) and 40 CFR § 63.1349(b)(5).

(10) Monitoring.

(a) If a wet scrubber is used to comply with the emission limitation under subparagraph (6)(a) of this rule, the owner or operator shall install, calibrate (to manufacturers' specifications), maintain, and operate devices (or establish methods) for monitoring the value of the operating parameters used to determine compliance with the operating limits listed in Table 2 of this rule. These devices (or methods) must measure and record the values for these operating parameters at the frequencies indicated in Table 2 of this rule at all times except as specified in subparagraph (t)1.(i) of this paragraph.

(b) If a fabric filter is used to comply with the requirements of this rule, the owner or operator shall install, calibrate, maintain, and continuously operate a bag leak detection system as specified in subparagraphs (b)1. through 8. of this rule.

1. The owner or operator shall install and operate a bag leak detection system for each exhaust stack of the fabric filter.

2. Each bag leak detection system shall be installed, operated, calibrated, and maintained in a manner consistent with the manufacturer's written specifications and recommendations.

3. The bag leak detection system shall be certified by the manufacturer to be capable of detecting particulate matter emissions at concentrations of 10 milligrams per actual cubic meter or less.

4. The bag leak detection system sensor shall provide output of relative or absolute particulate matter loadings.

5. The bag leak detection system shall be equipped with a device to continuously record the output signal from the sensor.

6. The bag leak detection system shall be equipped with an alarm system that will alert automatically an operator when an increase in relative particulate matter emissions over a preset level is detected. The alarm shall be located where it is observed easily by plant operating personnel.

7. For positive pressure fabric filter systems, a bag leak detection system shall be installed in each baghouse compartment or cell. For negative pressure or induced air fabric filters, the bag leak detector shall be installed downstream of the fabric filter.

8. Where multiple detectors are required, the system's instrumentation and alarm may be shared among detectors.

(c) If a device other than a wet scrubber, activated carbon, selective non-catalytic reduction, an electrostatic precipitator, or a dry scrubber is used to comply with the emission limitations under subparagraph (6)(a) of this rule, the owner or operator shall install, calibrate (to the manufacturers' specifications), maintain, and operate the equipment necessary to monitor compliance with the site-specific operating limits established using the procedures in subparagraph (6)(c) of this rule.

(d) If activated carbon injection is used to comply with the emission limitations in this rule, the owner or operator shall measure the minimum sorbent flow rate once per hour.

(e) If selective noncatalytic reduction is used to comply with the emission limitations, the owner or operator shall complete the following:

1. Following the date on which the initial performance test is completed or is required to be completed under paragraph (7) of this rule, whichever date

comes first, ensure that the affected facility does not operate above the maximum charge rate, or below the minimum secondary chamber temperature (if applicable to your CISWI) or the minimum reagent flow rate measured as 3-hour block averages at all times.

2. Operation of the affected facility above the maximum charge rate, below the minimum secondary chamber temperature and below the minimum reagent flow rate simultaneously constitute a violation of the nitrogen oxides emissions limit.

(f) If an electrostatic precipitator is used to comply with the emission limits of this rule, the owner or operator shall monitor the secondary power to the electrostatic precipitator collection plates and maintain the 3-hour block averages at or above the operating limits established during the mercury or particulate matter performance test.

(g) For waste-burning kilns not equipped with a wet scrubber or dry scrubber, an owner or operator shall install, calibrate, maintain, and operate a CEMS for monitoring hydrogen chloride emissions, discharged to the atmosphere, as specified in subparagraph (9)(j) of this rule, and record the output of the system. The owner or operator my substitute use of a HCl CEMS for conducting the HCl initial and annual testing with EPA Method 321 at 40 CFR part 63, appendix A. For units other than waste- burning kilns not equipped with a wet scrubber or dry scrubber, a facility may substitute use of a hydrogen chloride CEMS for conducting the hydrogen chloride initial and annual performance test. For units equipped with a hydrogen chloride CEMS, the owner or operator is not required to monitor the minimum hydrogen chloride sorbent flow rate, monitoring the minimum scrubber liquor pH, and monitoring minimum injection rate.

(h) To demonstrate continuous compliance with the particulate matter emissions limit, a facility may substitute use of either a particulate matter CEMS or a particulate matter CPMS for conducting the particulate matter annual performance test. For units equipped with a particulate matter CEMS other CMS monitoring for PM compliance (e.g., bag leak detectors, ESP secondary power, PM scrubber pressure) is not required. A facility may also substitute use of a particulate matter CEMS for conducting the PM initial performance test.

(i) To demonstrate initial and continuous compliance with the dioxin/furan emissions limit, a facility may substitute use of a continuous automated sampling system for the dioxin/furan initial and annual performance test. The owner or operator shall record the output of the system and analyze the sample according to EPA Method 23 at 40 CFR part 60, appendix A-7. This option to use a continuous automated sampling system takes effect on the date a final performance specification applicable to dioxin/furan from continuous monitors is published in the Federal Register. The owner or operator who elects to continuously sample dioxin/furan emissions instead of sampling and testing using EPA Method 23 at 40 CFR part 60, appendix A-7 shall install, calibrate, maintain and operate a continuous automated sampling system and shall comply with the requirements specified in § 60.58b(p) and (q). A facility may substitute continuous dioxin/furan monitoring for the minimum sorbent flow rate, if activated carbon sorbent injection is used solely for compliance with the dioxin/furan emission limit.

(j) To demonstrate initial and continuous compliance with the mercury emissions limit, a facility may substitute use of a mercury CEMS or an integrated sorbent trap monitoring system for the mercury initial and annual performance test.

The owner or operator who elects to continuously measure mercury emissions instead of sampling and testing using EPA Method 29 or 30B at 40 CFR part 60, appendix A-8, ASTM D6784-02 (Reapproved 2008) (incorporated by reference, see § 60.17), or an approved alternative method for measuring mercury emissions, shall install, calibrate, maintain and operate the mercury CEMS or integrated sorbent trap monitoring system and shall comply with performance specification 12A or performance specification 12B, respectively, and quality assurance procedure 5. For the purposes of emissions calculations when using an integrated sorbent trap monitoring system, the mercury concentration determined for each sampling period shall be assigned to each hour during the sampling period. For units equipped with a mercury CEMS or an integrated sorbent trap monitoring system, the owner or operator is not required to monitor the minimum sorbent flow rate, if activated carbon sorbent injection is used solely for compliance with the mercury emission limit. The owner or operators of waste-burning kilns shall install, calibrate, maintain, and operate a mercury CEMS or an integrated sorbent trap monitoring system as specified in subparagraph(9)(j) of this rule.

(k) To demonstrate initial and continuous compliance with the nitrogen oxides emissions limit, a facility may substitute use of a CEMS for the nitrogen oxides initial and annual performance test to demonstrate compliance with the nitrogen oxides emissions limits. For units equipped with a nitrogen oxides CEMS, monitoring of the charge rate, secondary chamber temperature and reagent flow for selective non catalytic reduction is not required.

1. Install, calibrate, maintain and operate a CEMS for measuring nitrogen oxides emissions discharged to the atmosphere and record the output of the system. The requirements under performance specification 2 of appendix B of 40 CFR part 60, the quality assurance procedure 1 of appendix F of 40 CFR part 60 and the procedures under § 60.13 shall be followed for installation, evaluation and operation of the CEMS.

2. Compliance with the emission limit for nitrogen oxides shall be determined based on the 30-day rolling average of the hourly emission concentrations using CEMS outlet data, as outlined in subparagraph (9)(u) of this rule.

(l) To demonstrate initial and continuous compliance with the sulfur dioxide emissions limit, a facility may substitute use of a CEMS for the sulfur dioxide initial and annual performance test to demonstrate compliance with the sulfur dioxide emissions limits.

1. Install, calibrate, maintain and operate a CEMS for measuring sulfur dioxide emissions discharged to the atmosphere and record the output of the system. The requirements under performance specification 2 of appendix B of 40 CFR part 60, the quality assurance requirements of procedure 1 of appendix F of 40 CFR part 60 and the procedures under § 60.13 must be followed for installation, evaluation and operation of the CEMS.

2. Compliance with the sulfur dioxide emission limit shall be determined based on the 30-day rolling average of the hourly arithmetic average emission concentrations using CEMS outlet data, as outlined in subparagraph (9)(u) of this rule.

(m) For energy recovery units 10 MMBtu/hr but less than 250 MMBtu/hr annual average heat input rates that do not use a wet scrubber, fabric filter with bag leak detection system, an electrostatic precipitator, particulate matter CEMS, or particulate matter CPMS, the owner or operator shall install, operate, certify and maintain a continuous opacity monitoring system according to the procedures in subparagraphs (10)(m)1. through 5. of this paragraph by the compliance date specified in paragraph (6) of this rule. Energy recovery units that use a particulate matter CEMS to demonstrate initial and continuing compliance according to the procedures in subparagraph (10)(n) are not required to install a continuous opacity monitoring system and shall perform the annual performance tests for opacity consistent with subparagraph (9)(f) of this rule.

1. Install, operate and maintain each continuous opacity monitoring system according to performance specification 1 at 40 CFR part 60, appendix B.

2. Conduct a performance evaluation of each continuous opacity monitoring system according to the requirements in § 60.13 and according to performance specification 1 at 40 CFR part 60, appendix B.

3. As specified in § 60.13(e)(1), each continuous opacity monitoring system shall complete a minimum of one cycle of sampling and analyzing for each successive 10-second period and one cycle of data recording for each successive 6-minute period.

4. Reduce the continuous opacity monitoring system data as specified in § 60.13(h)(1).

5. Determine and record all the 6-minute averages (and 1-hour block averages as applicable) collected.

(n) For coal and liquid/gas energy recovery units, incinerators, and small remote incinerators, an owner or operator may elect to install, calibrate, maintain and operate a CEMS for monitoring particulate matter emissions discharged to the atmosphere and record the output of the system. The owner or operator of an affected facility who continuously monitors particulate matter emissions instead of conducting performance testing using EPA Method 5 at 40 CFR part 60, appendix A-3 or monitoring with a particulate matter CPMS according to subparagraph (10)(r) of this paragraph, shall install, calibrate, maintain and operate a PM CEMS and shall comply with the requirements specified in subparagraphs (10)(n)1. through 10. of this paragraph below.

1. PM CEMS shall be installed, evaluated and operated in accordance with the requirements of performance specification 11 of appendix B of 40 CFR part 60 and quality assurance requirements of procedure 2 of appendix F of 40 CFR part 60 and § 60.13.

2. The initial performance evaluation shall be completed no later than 180 days after the final compliance date for meeting the amended emission limitations, as specified under paragraph (7) of this rule or within 180 days of notification to the Director of use of the continuous monitoring system if the owner or operator was previously determining compliance by Method 5 at 40 CFR part 60, appendix A-3 performance tests, whichever is later.

3. The owner or operator of an affected facility may request that compliance with the particulate matter emission limit be determined using carbon dioxide measurements corrected to an equivalent of 7 percent oxygen. The relationship between oxygen and carbon dioxide levels for the affected facility shall be established according to the procedures and methods specified in subparagraphs (9)(s)5.(i) through (iv).

4. The owner or operator of an affected facility shall conduct an initial performance test for particulate matter emissions. 7 If PM CEMS are elected for demonstrating compliance, and the initial performance test has not yet been conducted, then initial compliance shall be determined by using the CEMS specified in subparagraph (10)(n) of this paragraph to measure particulate matter. The owner or operator shall calculate a 30-day rolling average of 1-hour arithmetic average emission concentrations, including CEMS data during startup and shutdown, as defined in this rule, using Equation 19-19 in section 12.4.1 of EPA Reference Method 19 at 40 CFR part 60, appendix A-7.

5. Continuous compliance with the particulate matter emission limit shall be determined based on the 30-day rolling average calculated using Equation 19-19 in section 12.4.1 of EPA Reference Method 19 at 40 CFR part 60, Appendix A-7 from the 1-hour arithmetic average of the CEMS outlet data.

6. At a minimum, valid continuous monitoring system hourly averages shall be obtained as specified subparagraph (10)(t) of this paragraph.

7. The 1-hour arithmetic averages required under subparagraph (10)(n)5. of this paragraph shall be expressed in milligrams per dry standard cubic meter corrected to 7 percent oxygen (or carbon dioxide)(dry basis) and shall be used to calculate the 30-day rolling average emission concentrations. CEMS data during startup and shutdown, as defined in this rule, are not corrected to 7 percent oxygen, and are measured at stack oxygen content. The 1-hour arithmetic averages shall be calculated using the data points required under § 60.13(e)(2).

8. All valid CEMS data shall be used in calculating average emission concentrations even if the minimum CEMS data requirements of subparagraph (10)(n)6. of this paragraph are not met.

9. The CEMS shall be operated according to performance specification 11 in appendix B of 40 CFR part 60; and,

10. Quarterly and yearly accuracy audits and daily drift, system optics, and sample volume checks shall be performed in accordance with procedure 2 in appendix F of 40 CFR part 60.

(o) To demonstrate initial and continuous compliance with the carbon monoxide emissions limit, a facility may substitute use of a CEMS for the carbon monoxide initial and annual performance test to demonstrate compliance with the carbon monoxide emissions limits.

1. Install, calibrate, maintain, and operate a CEMS for measuring carbon monoxide emissions discharged to the atmosphere and record the output of the

system. The requirements under performance specification 4A or 4B of appendix B of 40 CFR part 60, the quality assurance procedure 1 of appendix F of 40 CFR part 60 and the procedures under § 60.13 shall be followed for installation, evaluation, and operation of the CEMS.

2. Compliance with the carbon monoxide emission limit shall be determined based on the 30-day rolling average of the hourly arithmetic average emission concentrations, including CEMS data during startup and shutdown as defined in this rule, using CEMS outlet data, as outlined in subparagraph (9)(u) of this rule.

(p) The owner/operator of an affected source with a bypass stack shall install, calibrate (to manufacturers' specifications), maintain and operate a device or method for measuring the use of the bypass stack including date, time and duration.

(q) For energy recovery units with a design heat input capacity of 100 MMBtu/hr or greater that do not use a carbon monoxide CEMS, the owner or operator shall install, operate and maintain an oxygen analyzer system as defined in paragraph (1) of this rule according to the procedures in subparagraphs (10)(q)1. through 4. of this paragraph below.

1. The oxygen analyzer system shall be operated by the initial performance test date specified in subparagraph (6)(b) of this rule.

2. The owner or operator shall operate the oxygen trim system within compliance with subparagraph (q)3. below at all times.

3. The owner or operator shall maintain the oxygen level such that the 30-day rolling average that is established as the operating limit for oxygen according to subparagraph (q)4. below is not below the lowest hourly average oxygen concentration measured during the most recent CO performance test.

4. The owner or operator shall calculate and record a 30-day rolling average oxygen concentration using Equation 19-19 in section 12.4.1 of EPA Reference Method 19 of Appendix A-7 of 40 CFR part 60.

(r) For energy recovery units with annual average heat input rates greater than or equal to 250 MMBtu/hr and waste-burning kilns, the owner or operator shall install, calibrate, maintain, and operate a PM CPMS and record the output of the system as specified in subparagraphs (10)(r)1. through 8. of this paragraph below. For other energy recovery units, the owner or operator may elect to use PM CPMS operated in accordance with this paragraph. PM CPMS are suitable in lieu of using other CMS for monitoring PM compliance (e.g., bag leak detectors, ESP secondary power, PM scrubber pressure).

1. Install, calibrate, operate, and maintain the PM CPMS according to the procedures in the approved site-specific monitoring plan developed in accordance with paragraph (9)(l) and subparagraphs (10)(r)1.(i) through (iii) of this rule.

(i) The operating principle of the PM CPMS shall be based on in-stack or extractive light scatter, light scintillation, beta attenuation, or mass accumulation of the exhaust gas or representative sample. The reportable measurement output from the PM CPMS shall be expressed as milliamps.

(ii) The PM CPMS shall have a cycle time (i.e., period required to complete sampling, measurement, and reporting for each measurement) no longer than 60 minutes.

(iii) The PM CPMS shall be capable of detecting and responding to particulate matter concentrations of no greater than 0.5 mg/actual cubic meter.

2. During the initial performance test or any such subsequent performance test that demonstrates compliance with the PM limit, the owner or operator shall adjust the site-specific operating limit in accordance with the results of the performance test according to the procedures specified in subparagraph (6)(b) of this rule.

3. Collect PM CPMS hourly average output data for all energy recovery unit or waste-burning kiln operating hours. Express the PM CPMS output as milliamps.

4. Calculate the arithmetic 30-day rolling average of all of the hourly average PM CPMS output collected during all energy recovery unit or waste-burning kiln operating hours data (milliamps or digital bits).

5. The owner or operator shall collect data using the PM CPMS at all times the energy recovery unit or waste-burning kiln is operating and at the intervals specified in subparagraph (10)(r)1.(ii) of this paragraph, except for periods of monitoring system malfunctions, repairs associated with monitoring system malfunctions, required monitoring system quality assurance or quality control activities (including, as applicable, calibration checks and required zero and span adjustments), and any scheduled maintenance as defined in the site-specific monitoring plan.

6. The owner or operator shall use all the data collected during all energy recovery unit or waste-burning kiln operating hours in assessing the compliance with the operating limit except:

(i) Any data collected during monitoring system malfunctions, repairs associated with monitoring system malfunctions, or required monitoring system quality assurance or quality control activities conducted during monitoring system malfunctions are not used in calculations (report any such periods in the annual deviation report);

(ii) Any data collected during periods when the monitoring system is out of control as specified in the site-specific monitoring plan, repairs associated with periods when the monitoring system is out of control, or required monitoring system quality assurance or quality control activities conducted during out-of-control periods are not used in calculations (report emissions or operating levels and report any such periods in the annual deviation report); and

(iii) Any PM CPMS data recorded during periods of CEMS data during startup and shutdown, as defined in this rule.

7. The owner or operator shall record and make available upon request results of PM CPMS system performance audits, as well as the dates and duration of periods from when the PM CPMS is out of control until completion of the

corrective actions necessary to return the PM CPMS to operation consistent with the site-specific monitoring plan.

8. For any deviation of the 30-day rolling average PM CPMS average value from the established operating parameter limit, the owner or operator shall:

(i) Within 48 hours of the deviation, visually inspect the air pollution control device;

(ii) If inspection of the air pollution control device identifies the cause of the deviation, take corrective action as soon as possible and return the PM CPMS measurement to within the established value; and

(iii) Within 30 days of the deviation or at the time of the annual compliance test, whichever comes first, conduct a PM emissions compliance test to determine compliance with the PM emissions limit and to verify. Within 45 days of the deviation, the owner or operator shall re-establish the CPMS operating limit. It is not required to conduct additional testing for any deviations that occur between the time of the original deviation and the PM emissions compliance test required under this subparagraph; and

(iv) PM CPMS deviations leading to more than four required performance tests in a 12-month process operating period (rolling monthly) constitute a violation of this rule.

(s) If a dry scrubber is used to comply with the emission limits of this rule, the owner or operator shall monitor the injection rate of each sorbent and maintain the 3-hour block averages at or above the operating limits established during the hydrogen chloride performance test.

(t) If required to monitor clinker production to comply with the production-rate based mercury limit for the waste-burning kiln, the owner or operator shall:

- Determine hourly clinker production by one of two methods:

- Install, calibrate, maintain, and operate a permanent weigh scale system to measure and record weight rates in tons-mass per hour of the amount of clinker produced. The system of measuring hourly clinker production shall Install, calibrate, maintain, and operate a permanent weigh scale system to be maintained within ±5 percent accuracy, or

- Install, calibrate, maintain, and operate a permanent weigh scale system to measure and record weight rates in tons-mass per hour of the amount of feed to the kiln. The system of measuring feed shall be maintained within ±5 percent accuracy. Calculate your hourly clinker production rate using a kiln-specific feed to clinker ratio based on reconciled clinker production determined for accounting purposes and recorded feed rates. Update this ratio monthly. Note that if this ratio changes at clinker reconciliation, the owner or operator shall use the new ratio going forward, but do not have to retroactively change clinker production rates previously estimated.

- Determine the accuracy of the system of measuring hourly clinker production (or feed mass flow if applicable) before the final compliance date of this rule and during each quarter of source operation.

- Conduct accuracy checks in accordance with the procedures outlined in the site-specific monitoring plan under subparagraph (9)(l) of this rule.

(u) The minimum amount of monitoring data obtained is determined as follows:

1. For each continuous monitoring system required or optionally allowed under paragraph (10) of this rule, the owner or operator shall monitor and collect data according to subparagraphs (10)(t)1.(i) through (iii) below:

(i) The owner or operator shall operate the monitoring system and collect data at all required intervals at all times compliance is required except for periods of monitoring system malfunctions or out-of-control periods, repairs associated with monitoring system malfunctions or out-of-control periods (as specified in subparagraph (11)(cc)15. of this rule), and required monitoring system quality assurance or quality control activities including, as applicable, calibration checks and required zero and span adjustments. A monitoring system malfunction is any sudden, infrequent, not reasonably preventable failure of the monitoring system to provide valid data. Monitoring system failures that are caused in part by poor maintenance or careless operation are not malfunctions. The owner or operator is required to effect monitoring system repairs in response to monitoring system malfunctions or out-of-control periods and to return the monitoring system to operation as expeditiously as practicable.

(ii) The owner or operator may not use data recorded during the monitoring system malfunctions, repairs associated with monitoring system malfunctions or out-of control periods, or required monitoring system quality assurance or control activities in calculations used to report emissions or operating levels. The owner or operator shall use all the data collected during all other periods in assessing the operation of the control device and associated control system.

(iii) Except for periods of monitoring system malfunctions or out-of-control periods, repairs associated with monitoring system malfunctions or out-of-control periods, and required monitoring system quality assurance or quality control activities including, as applicable, calibration checks and required zero and span adjustments, failure to collect required data is a deviation of the monitoring requirements.

(v) If the owner or operator of a waste-burning kiln chooses to comply with the equivalent production-based mercury emission limit in Table 7, it must also monitor mercury pursuant to 40 CFR § 63.1350(k), the clinker production rate pursuant to 40 CFR § 63.1350(d), and the flow rate pursuant to 40 CFR § 63.1350(n). An owner or operator of a waste burning kiln is not required to develop an emissions monitoring plan pursuant 40 CFR § 63.1350(p)(1) through (p)(4) if the owner or operator prepares the emissions monitoring plan required pursuant to subparagraphs (9)(k) and (9)(l) of this rule.

(11) Recordkeeping and Reporting. The following items shall be maintained (as applicable) as specified in subparagraphs (a), (b), and (e) through (w) of this paragraph for a period of at least 5 years:

(a) Calendar date of each record.

(b) Records of the data described in subparagraphs (b)1. through 7. of this paragraph:

1. The CISWI charge dates, times, weights, and hourly charge rates.

2. Liquor flow rate to the wet scrubber inlet every 15 minutes of operation, as applicable.

3. Pressure drop across the wet scrubber system every 15 minutes of operation or amperage to the wet scrubber every 15 minutes of operation, as applicable.

4. Liquor pH as introduced to the wet scrubber every 15 minutes of operation, as applicable.

5. For affected CISWIs that establish operating limits for controls other than wet scrubbers under subparagraph (6)(b)4. though 7. or (6)(c) of this rule, the owner or operator shall maintain data collected for all operating parameters used to determine compliance with the operating limits. For energy recovery units using activated carbon injection or a dry scrubber, the owner or operator shall also maintain records of the load fraction and corresponding sorbent injection rate records.

6. If a fabric filter is used to comply with the emission limitations, the owner or operator shall record the date, time, and duration of each alarm and the time corrective action was initiated and completed, and a brief description of the cause of the alarm and the corrective action taken. The owner or operator shall also record the percent of operating time during each 6-month period that the alarm sounds, calculated as specified in subparagraph (6)(b)3. of this rule.

7. If monitoring of clinker production is in accordance with subparagraph (10)(t) of this rule:

(i) Hourly clinker rate produced if clinker production is measured directly;

(ii) Hourly measured kiln feed rates and calculated clinker production rates if clinker production is not measured directly;

(iii) 30-day rolling averages for mercury in pounds per million tons of clinker produced;

(iv) The initial and quarterly accuracy of the system of measuring hourly clinker production (or feed mass flow).

(c) Reserved.

(d) Reserved.

(e) Identification of calendar dates and times for which data show a deviation from the operating limits in Table 2 of this rule or a deviation from other operating limits established under subparagraph (6)(b)4. through 7. or (6)(c) of this rule with a description of the deviations, reasons for such deviations, and a description of corrective actions taken.

(f) The results of the initial, annual, and any subsequent performance tests conducted to determine compliance with the emission limits and/or to establish operating limits, as applicable. Retain a copy of the complete test report including calculations.

(g) Records showing the names of CISWI operators who have completed review of the information in subparagraph (5)(g)1. as required by subparagraph (5)(g)2. of this rule, including the date of the initial review and all subsequent annual reviews.

(h) Records showing the names of the CISWI operators who have completed the operator training requirements, met the criteria for qualification, and maintained or renewed their qualification under paragraph (5) of this rule. Records shall include documentation of training, the dates of the initial and refresher training, and the dates of their qualification and all subsequent renewals of such qualifications.

(i) For each qualified operator, the phone and/or pager number at which they can be reached during operating hours.

(j) Records of calibration of any monitoring devices as required under paragraph (10) of this rule.

(k) Equipment vendor specifications and related operation and maintenance requirements for the incinerator, emission controls, and monitoring equipment.

(l) The information listed in subparagraph (5)(g) of this rule.

(m) On a daily basis, keep a log of the quantity of waste burned and the types of waste burned (always required).

(n) Maintain records of the annual air pollution control device inspections that are required for each CISWI subject to the emissions limits in table 1 of this rule or tables 5 through 8 of this rule, any required maintenance and any repairs not completed within 10 days of an inspection or the timeframe established by the Director.

(o) For continuously monitored pollutants or parameters, the owner or operator shall document and keep a record of the following parameters measured

using continuous monitoring systems. If monitoring emissions with a CEMS, data that are CEMS data during startup and shutdown shall be indicated.

1. All 6-minute average levels of opacity.

2. All 1-hour average concentrations of sulfur dioxide emissions.

3. All 1-hour average concentrations of nitrogen oxides emissions.

4. All 1-hour average concentrations of carbon monoxide emissions.

5. All 1-hour average concentrations of particulate matter emissions.

6. All 1-hour average concentrations of mercury emissions.

7. All 1-hour average concentrations of HCl CEMS outputs.

8. All 1-hour average percent oxygen concentrations.

9. All 1-hour average PM CPMS readings or particulate matter CEMS outputs.

(p) Records indicating use of the bypass stack, including dates, times and durations.

(q) If choosing to stack test less frequently than annually, consistent with subparagraph (9)(bb) of this rule, the owner or operator shall keep annual records that document that the emissions in the previous stack test(s) were less than 75 percent of the applicable emission limit and document that there was no change in source operations including fuel composition and operation of air pollution control equipment that would cause emissions of the relevant pollutant to increase within the past year.

(r) Records of the occurrence and duration of each malfunction of operation (i.e., process equipment) or the air pollution control and monitoring equipment.

(s) Records of all required maintenance performed on the air pollution control and monitoring equipment.

(t) Records of actions taken during periods of malfunction to minimize emissions in accordance with § 60.11(d) of 40 CFR part 60, including corrective actions to restore malfunctioning process and air pollution control and monitoring equipment to its normal or usual manner of operation.

(u) For operating units that combust non-hazardous secondary materials that have been determined not to be solid waste pursuant to § 241.3(b)(1), the owner or operator shall keep a record which documents how the secondary material meets each of the legitimacy criteria under § 241.3(d)(1). If the owner or operator combusts a fuel that has been processed from a discarded non-hazardous secondary material pursuant to § 241.3(b)(4), the owner or operator shall keep records as to how the operations that produced the fuel satisfies the definition of processing in § 241.2 and each of the legitimacy criteria in § 241.3(d)(1). If the fuel

received a non-waste determination pursuant to the petition process submitted under § 241.3(c), the owner or operator shall keep a record that documents how the fuel satisfies the requirements of the petition process. For operating units that combust non-hazardous secondary materials as fuel per § 241.4, the owner or operator shall keep records documenting that the material is a listed non-waste under § 241.4(a).

(v) Records of the criteria used to establish that the unit qualifies as a small power production facility under section 3(17)(C) of the Federal Power Act (16 U.S.C. 796(17)(C)) and that the waste material the unit is proposed to burn is homogeneous.

(w) Records of the criteria used to establish that the unit qualifies as a cogeneration facility under section 3(18)(B) of the Federal Power Act (16 U.S.C. 796(18)(B)) and that the waste material the unit is proposed to burn is homogeneous.

(x) All records shall be available onsite in either paper copy or computer-readable format that can be printed upon request, unless an alternative format is approved by the Director.

(y) A summary of the reporting requirements can be found in Table 4 of this rule.

(z) The waste management plan shall be submitted no later than the date specified in subparagraph (3)(a)1. of this rule for submittal of the final control plan.

(aa) The information specified in subparagraphs (aa)1. through 3. of this paragraph below shall be submitted no later than 60 days following the initial performance test. All reports shall be signed by the responsible official.

1. The complete test report for the initial performance test results obtained under paragraph (8) of this rule, as applicable.

2. The values for the site-specific operating limits established in subparagraphs (6)(b) or (c) of this rule.

3. If a fabric filter is being used to comply with the emission limitations, documentation that a bag leak detection system has been installed and is being operated, calibrated, and maintained as required by subparagraph (10)(b) of this rule.

(bb) An annual report shall be submitted no later than 12 months following the submission of the information in subparagraph (aa) of this paragraph above. Subsequent reports shall be submitted no more than 12 months following the previous report. (If the unit is subject to permitting requirements under title V of the Clean Air Act, the owner or operator may be required by the permit to submit these reports more frequently.)

(cc) The annual report required under subparagraph (bb) of this paragraph above shall include the ten items listed in subparagraphs (cc)1. through 10. of this paragraph below. If there is a deviation from the operating limits or the

emission limitations, deviation reports shall also be submitted as specified in subparagraph (dd) of this paragraph below.

1. Company name and address.

2. Statement by a responsible official, with that official's name, title, and signature, certifying the accuracy of the content of the report.

3. Date of report and beginning and ending dates of the reporting period.

4. The values for the operating limits established pursuant to subparagraphs (6)(b) or (6)(c) of this rule.

5. If no deviation from any emission limitation or operating limit that applies has been reported, a statement that there was no deviation from the emission limitations or operating limits during the reporting period.

6. The highest recorded 3-hour average and the lowest recorded 3-hour average (30-day average for energy recovery units), as applicable, for each operating parameter recorded for the calendar year being reported.

7. Information recorded under subparagraphs (b)6. and (e) of this paragraph for the calendar year being reported.

8. If a performance test was conducted during the reporting period, the results of that test.

9. If the requirements of subparagraphs (9)(bb) were met, and did not conduct a performance test during the reporting period, the owner or operator shall state that the requirements of subparagraphs (9)(bb) were met, and, therefore, were not required to conduct a performance test during the reporting period.

10. Documentation of periods when all qualified CISWI operators were unavailable for more than 8 hours, but less than 2 weeks.

11. If there was a malfunction during the reporting period, the compliance report shall include the number, duration, and a brief description for each type of malfunction that occurred during the reporting period and that caused or may have caused any applicable emission limitation to be exceeded. The report shall also include a description of actions taken by an owner or operator during a malfunction of an affected source to minimize emissions in accordance with § 60.11(d), including actions taken to correct a malfunction.

12. For each deviation from an emission or operating limitation that occurs for a CISWI for which a CMS is not being used to comply with the emission or operating limitations in this rule, the annual report shall contain the following information.

(i) The total operating time of the CISWI at which the deviation occurred during the reporting period.

(ii) Information on the number, duration, and cause of deviations (including unknown cause, if applicable), as applicable, and the corrective action taken.

13. If there were periods during which the continuous monitoring system, including the CEMS, was out of control as specified in subparagraph (11)(cc)15. of this paragraph, the annual report shall contain the following information for each deviation from an emission or operating limitation occurring for a CISWI for which a continuous monitoring system is being used to comply with the emission and operating limitations in this rule.

(i) The date and time that each malfunction started and stopped.

(ii) The date, time, and duration that each CMS was inoperative, except for zero (low-level) and high-level checks.

(iii) The date, time, and duration that each continuous monitoring system was out-of-control, including start and end dates and hours and descriptions of corrective actions taken.

(iv) The date and time that each deviation started and stopped, and whether each deviation occurred during a period of malfunction or during another period.

(v) A summary of the total duration of the deviation during the reporting period, and the total duration as a percent of the total source operating time during that reporting period.

(vi) A breakdown of the total duration of the deviations during the reporting period into those that are due to control equipment problems, process problems, other known causes, and other unknown causes.

(vii) A summary of the total duration of continuous monitoring system downtime during the reporting period, and the total duration of continuous monitoring system downtime as a percent of the total operating time of the CISWI at which the continuous monitoring system downtime occurred during that reporting period.

(viii) An identification of each parameter and pollutant that was monitored at the CISWI.

(ix) A brief description of the CISWI.

(x) A brief description of the continuous monitoring system.

(xi) The date of the latest continuous monitoring system certification or audit; and

(xii) A description of any changes in continuous monitoring system, processes, or controls since the last reporting period.

14. If there were periods during which the continuous monitoring system, including the CEMS, was not out of control as specified in subparagraph

(ll)(cc)15. of this paragraph, a statement that there were not periods during which the continuous monitoring system was out of control during the reporting period.

15. A continuous monitoring system is out of control if any of the following occur.

(i) The zero (low-level), mid-level (if applicable), or high-level calibration drift exceeds two times the applicable calibration drift specification in the applicable performance specification or in the relevant standard.

(ii) The continuous monitoring system fails a performance test audit (e.g., cylinder gas audit), relative accuracy audit, relative accuracy test audit, or linearity test audit.

(iii) The continuous opacity monitoring system calibration drift exceeds two times the limit in the applicable performance specification in the relevant standard.

16. For energy recovery units, include the annual heat input and average annual heat input rate of all fuels being burned in the unit to verify which subcategory of energy recovery unit applies.

(dd) Reporting of deviations from the operating limits or the emission limitations.

1. A deviation report shall be submitted if any recorded 3-hour average (30-day average for energy recovery units or for PM CPMS) parameter level is above the maximum operating limit or below the minimum operating limit established under this rule, if the bag leak detection system alarm sounds for more than 5 percent of the operating time for the 6-month reporting period, if a performance test was conducted that deviated from any emission limitation, if a 30-day average measured using a CEMS deviated from any emission limitation.

2. The deviation report shall be submitted by August 1 of that year for data collected during the first half of the calendar year (January 1 to June 30), and by February 1 of the following year for data collected during the second half of the calendar year (July 1 to December 31).

3. In each report required under this subparagraph, for any pollutant or parameter that deviated from the emission limitations or operating limits specified in this rule, include the items described in subparagraphs (dd)3.(i) through (iv) of this paragraph below.

(i) The calendar dates and times the CISWI deviated from the emission limitations or operating limit requirements.

(ii) The averaged and recorded data for those dates.

(iii) Duration and causes of the following:

(I) Each deviation from emission limitations or operating limits and corrective actions taken; and

(II) Bypass events and corrective actions taken.

(iv) A copy of the operating limit monitoring data during each deviation and for any test report that documents the emission levels.

4. If all qualified operators are not accessible for 2 weeks or more, the two actions in subparagraphs (dd)4.(i) and (ii) of this paragraph below shall be taken.

(i) Submit a notification of the deviation within 10 days that includes the three items in subparagraphs (dd)4.(i)(I) through (III) of this paragraph below.

(I) A statement of what caused the deviation.

(II) A description of what actions are being taken to ensure that a qualified operator is accessible.

(III) The date when it is anticipated that a qualified operator will be available.

(ii) Submit a status report to the Director every 4 weeks that includes the three items in subparagraphs (dd)4.(ii)(I) through (III) of this paragraph below.

(I) A description of what actions are being taken to ensure that a qualified operator is accessible.

(II) The date when it is anticipated that a qualified operator will be accessible.

(III) Request approval from the Director to continue operation of the CISWI.

(iii) If the CISWI unit was shut down by the Administrator, under the provisions of subparagraph (5)(h)2.(ii) of this rule, due to a failure to provide an accessible qualified operator, the owner or operator shall notify the Administrator that operations will resume once a qualified operator is accessible.

(ee) Notifications provided by 40 CFR, § 60.7 [as incorporated by reference under ADEM Admin. Code r. 335-3-10-.02(1)] shall be submitted.

(ff) If the owner or operator cease combusting solid waste but continue to operate, the owner or operator shall provide 30 days prior notice of the effective date of the waste-to-fuel switch, consistent with paragraph (9)(a) of this rule. The notification must identify:

1. The name of the owner or operator of the CISWI, the location of the source, the emissions unit(s) that will cease burning solid waste, and the date of the notice;

2. The currently applicable subcategory under this rule, and any 40 CFR part 63 subpart and subcategory that will be applicable after combusting solid waste is ceased;

3. The fuel(s), non-waste material(s) and solid waste(s) the CISWI is currently combusting and has combusted over the past 6 months, and the fuel(s) or non-waste materials the unit will commence combusting;

4. The date on which the unit became subject to the currently applicable emission limits;

5. The date upon which the unit will cease combusting solid waste, and the date (if different) that the owner or operator intend for any new requirements to become applicable (i.e., the effective date of the waste-to-fuel switch), consistent with subparagraphs (ff)2. and 3. of this paragraph.

(gg) Initial, annual, and deviation reports shall be submitted electronically or in paper format, postmarked on or before the submittal due dates. Beginning on April 16, 2021, or once the reporting form has been available in CEDRI for 1 year, whichever is later, subsequent reports shall be submitted on or before the submittal dates to the EPA via the Compliance and Emissions Data Reporting Interface (CEDRI) which CEDRI can be accessed through the EPA's Central Data Exchange (CDX) (*https://cdx.epa.gov/*). Use the appropriate electronic report in CEDRI for this rule or an alternate electronic file format consistent with the extensible markup language (XML) schema listed on the CEDRI Web site (*https://www3.epa.gov/ttn/chief/cedri/index.html*). When the date forms become available in CEDRI will be listed on the CEDRI Web site. The reports shall be submitted by the deadlines specified in this rule, regardless of the method in which the report is submitted.

(hh) Submit results of performance tests and CEMS performance evaluation tests as follows.

1. Within 60 days after the date of completing each performance test as required by this rule, the owner or operator shall submit the results of the performance tests following the procedure specified in either subparagraph (hh)1.(i) or (hh)1.(ii) of this paragraph:

(i) For data collected using test methods supported by the EPA's Electronic Reporting Tool (ERT) as listed on the EPA's ERT Web site (*https://www3.epa.gov/ttn/chief/ert/ert_info.html*) at the time of the test, the owner or operator shall submit the results of the performance test to the EPA via the CEDRI. (CEDRI can be accessed through the EPA's CDX (*https://cdx.epa.gov/*).) Performance test data shall be submitted in a file format generated through the use of the EPA's ERT or an alternate electronic file format consistent with the XML schema listed on the EPA's ERT Web site. If the owner or operator claim that some of the performance test information being submitted is confidential business information (CBI), the owner or operator shall submit a complete file generated through the use of the EPA's ERT or an alternate electronic file consistent with the XML schema listed on the EPA's ERT Web site, including information claimed to be CBI, on a compact disc, flash drive, or other commonly used electronic storage media to the EPA. The electronic media shall be clearly marked as CBI and mailed to U.S. EPA/OAQPS/CORE CBI Office, Attention: Group Leader, Measurement Policy Group, MD C404-02, 4930 Old Page Rd., Durham, NC 27703. The same ERT or alternate file with the CBI omitted shall be submitted to the EPA via the EPA's CDX as described earlier in this subparagraph; and

(ii) For data collected using test methods that are not supported by the EPA's ERT as listed on the EPA's ERT Web site at the time of the test, the owner or operator shall submit the results of the performance test to the Administrator at the appropriate address listed in 40 CFR, §60.4.

2. Within 60 days after the date of completing each CEMS performance evaluation the owner or operator shall submit the results of the performance evaluation following the procedure specified in either subparagraph (hh)1. Or (hh)2. of this paragraph:

(i) For performance evaluations of continuous monitoring systems measuring relative accuracy test audit (RATA) pollutants that are supported by the EPA's ERT as listed on the EPA's ERT Web site at the time of the evaluation, the owner or operator shall submit the results of the performance evaluation to the EPA via the CEDRI. CEDRI can be accessed through the EPA's CDX. Performance evaluation data shall be submitted in a file format generated through the use of the EPA's ERT or an alternate file format consistent with the XML schema listed on the EPA's ERT Web site. If the owner or operator claim that some of the performance evaluation information being submitted is CBI, the owner or operator shall submit a complete file generated through the use of the EPA's ERT or an alternate electronic file consistent with the XML schema listed on the EPA's ERT Web site, including information claimed to be CBI, on a compact disc, flash drive, or other commonly used electronic storage media to the EPA. The electronic storage media shall be clearly marked as CBI and mailed to U.S. EPA/OAQPS/CORE CBI Office, Attention: Group Leader, Measurement Policy Group, MD C404-02, 4930 Old Page Rd., Durham, NC 27703. The same ERT or alternate file with the CBI omitted shall be submitted to the EPA via the EPA's CDX as described earlier in this subparagraph; and

(ii) For any performance evaluations of continuous monitoring systems measuring RATA pollutants that are not supported by the EPA's ERT as listed on the EPA's ERT Web site at the time of the evaluation, the owner or operator shall submit the results of the performance evaluation to the Administrator at the appropriate address listed in 40 CFR, §60.4.

(ii) If required to electronically submit a report through the Compliance and Emissions Data Reporting Interface (CEDRI) in the EPA's Central Data Exchange (CDX), and due to a planned or actual outage of either the EPA's CEDRI or CDX systems within the period of time beginning 5 business days prior to the date that the submission is due, the owner or operator shall be or are precluded from accessing CEDRI or CDX and submitting a required report within the time prescribed, the owner or operator may assert a claim of EPA system outage for failure to timely comply with the reporting requirement. Notification shall be submitted to the Administrator in writing as soon as possible following the date known, or through due diligence should have known, that the event may cause or caused a delay in reporting. A written description shall be provided to the Administrator identifying the date, time and length for the outage; a rational for attributing the delay in reporting beyond the regulatory deadline to the EPA system outage; describe the measures taken or tot be taken to minimize the delay in reporting; and identify a date by which the owner or operator will propose to report, or if already met the reporting requirement at the time of the notification, the date reported. In any circumstance, the report shall be submitted electronically as soon as possible after the outage is resolved. The decision to accept the claim of EPA system outage and allow an extension to the reporting deadline is solely within the discretion of the Administrator.

(ii) If required to electronically submit a report through CEDRI in the EPA's CDX and a force majeure event is about to occur, occurs, or has occurred or there are lingering effects from such an event within the period of time beginning 5 business days prior to the date the submission is due, the owner or operator may assert a claim of force majeure for failure to timely comply with the reporting requirement. For the purposes of this section, a force majeure event is defined as an event that will be or has been caused by circumstances beyond the control of the affected facility, its contractors, or any entity controlled by the affected facility that prevents compliance with the requirement to submit a report electronically within the time period prescribed. Examples of such events are acts of nature (e.g., hurricanes, earthquakes, or floods), acts of war or terrorism, or equipment failure of safety hazard beyond the control of the affected facility (e.g., large scale power outage). If intended to assert a claim of force majeure, a notification shall be submitted to the Administrator in writing as soon as possible following the date first known, or through due diligence should have known, that the event may cause or caused a delay in reporting. The owner or operator shall provide to the Administrator a written description of the force majeure event and a rationale for attributing the delay in reporting beyond the regulatory deadline to the force majeure event; describe the measures taken or to be taken to minimize the delay in reporting; and identify a date by which is proposed to report, or if already met the reporting requirement at the time of the notification, the date reported. In any circumstance, the reporting shall occur as soon as possible after the force majeure event occurs. The decision to accept the claim of force majeure and allow an extension to the reporting deadline is solely within the discretion of the Administrator.

(kk) The Director may change the semiannual or annual reporting dates. Procedures for seeking approval to change reporting dates are found in 40 CFR, § 60.19(c) [as incorporated by reference under ADEM Admin. Code r. 335-3-10-.02(1)].

(ll) If the owner or operator of a waste-burning kiln chooses to comply with the equivalent production-based mercury emission limit in Table 7, it shall also keep records of all data collected from the continuous flow rate monitoring system required by 40 CFR § 63 .1350(n), all data collected from the clinker production monitoring system required by 40 CFR § 63.1350(d), and all calculated 30- operating day rolling average values derived from the mercury monitoring system. Units in the waste-burning kiln subcategory complying with the equivalent production-based mercury emission limit in Table 7 must also report all deviations from the equivalent production-based mercury limit in accordance with subparagraphs (10)(a) through (10)(dd) of this rule.

(12) Major Source Operating Permits. Each CISWI and ACI subject to standards under this rule (excluding rules in paragraph (12 below) shall operate pursuant to the requirements of chapter 335-3-16 by December 1, 2003.

(13) Air Curtain Incinerators (ACIs).

(a) An ACI operates by forcefully projecting a curtain of air across an open chamber or open pit in which combustion occurs. Incinerators of this type can be constructed above or below ground and with or without refractory walls and floor. Air curtain incinerators are not to be confused with conventional combustion devices with enclosed fireboxes and controlled air technology such as mass burn, modular, and fluidized bed combustors.

(b) Air curtain incinerators that burn only the materials listed in subparagraphs (b)1. through 3. of this paragraph below are only required to meet the requirements under this paragraph.

1. 100 percent wood waste.

2. 100 percent clean lumber.

3. 100 percent mixture of only wood waste, clean lumber, and/or yard waste.

(c) For owners or operators planning to achieve compliance more than one year following the effective date of EPA's approval of these rules, the two increments of progress specified in subparagraphs (c)1. and 2. of this paragraph below shall be met.

1. Submit a final control plan no later than one year following the effective date of EPA's approval of these rules.

2. Achieve final compliance no later than December 1, 2005.

(d) The owner or operator shall submit to the Director, notifications for achieving increments of progress. The notifications shall be postmarked no later than 10 business days after the compliance date for the increment. These notifications shall include the three items specified in subparagraphs (d)1. through 3. of this paragraph below:

1. Notification that the increment of progress has been achieved.

2. Any items required to be submitted with each increment of progress.

3. Signature of the owner or operator of the incinerator unit.

(e) If an owner or operator fails to meet an increment of progress, a notification to the Director shall be submitted and postmarked within 10 business days after the date for that increment of progress in subparagraph (c) of this paragraph above. The owner or operator shall inform the Director that the increment was not met, and reports shall be submitted each subsequent calendar month until the increment of progress is met.

(f) For the control plan increment of progress, the owner or operator shall satisfy the two requirements specified in subparagraphs (f)1. and 2. of this paragraph below.

1. Submit the final control plan, including a description of any devices for air pollution control and any process changes that will be used to comply with the emission limitations and other requirements of this paragraph.

2. Maintain an onsite copy of the final control plan.

(g) For the final compliance increment of progress, the owner or operator shall complete all process changes and retrofit construction of control devices, as

specified in the final control plan, so that, if the affected incinerator is brought online, all necessary process changes and air pollution control devices would operate as designed.

(h) Closing and restarting an air curtain incinerator.

1. If the incinerator is closed but will be restarted prior to the final compliance date of December 1, 2005, the increments of progress specified in subparagraph (c) of this paragraph shall be met.

2. If the incinerator is to restart after the final compliance date, the owner or operator shall complete emission control retrofits and meet the emission limitations on the date the incinerator restarts operation.

(i) Permanent closure of an air curtain incinerator. If the owner or operator plans to close the incinerator rather than comply with this rule, submit a closure notification, including the date of closure, to the Director within 90 days after EPA approval of these rules.

(j) Emission limitations for air curtain incinerators.

1. After the date the initial stack test is required or completed (whichever is earlier), the owner or operator shall meet the limitations in subparagraphs (j)1.(i) and (ii) of this paragraph below.

(i) Maintain opacity to less than or equal to 10 percent opacity (as determined by the average of three 1-hour blocks consisting of ten 6-minute average opacity values), except as described in subparagraph (j)1.(ii) of this paragraph below.

(ii) Maintain opacity to less than or equal to 35 percent opacity (as determined by the average of three 1-hour blocks consisting of ten 6-minute average opacity values) during the startup period that is within the first 30 minutes of operation.

(k) Monitoring opacity for air curtain incinerators.

1. Use Method 9 of 40 CFR 60, Appendix A to determine compliance with the opacity limitation.

2. Conduct an initial test for opacity as specified in 40 CFR, § 60.8 no later than 180 days after the final compliance date.

3. After the initial test for opacity, conduct annual tests no more than 12 calendar months following the date of the previous test.

(l) Recordkeeping and reporting requirements for air curtain incinerators.

1. Keep records of results of all initial and annual opacity tests onsite in either paper copy or electronic format, unless the Director approves another format, for at least 5 years.

2. Make all records available for submittal to the Director or for an inspector's onsite review.

(ii) Submit an initial report no later than 60 days following the initial opacity test that includes the information specified in subparagraphs (l)3.(i) and (ii) of this paragraph below.

(iii) The types of materials planned to be combusted in the air curtain incinerator.

(iv) The results (as determined by the average of three 1-hour blocks consisting of ten 6-minute average opacity values) of the initial opacity tests.

3. Submit annual opacity test results within 12 months following the previous report.

4. Submit initial and annual opacity test reports as electronic or paper copy on or before the applicable submittal date and keep a copy onsite for a period of 5 years.

TABLE 1. EMISSION LIMITS FOR INCINERATORS THAT COMMENCED CONSTRUCTION ON OR BEFORE NOVEMBER 30, 1999, AND WERE NOT MODIFIED OR RECONSTRUCTED AFTER JUNE 1, 2001

Pollutant	Units (7 percent oxygen, dry basis, except opacity)	Averaging Time	Compliance Method 40 CFR 60 Appendix A
Cadmium	0.004 Milligrams per dry standard cubic meter	3-run average (1 hour minimum sample time per run)	Method 29
Carbon Monoxide	157 Parts per million by dry volume	3-run average (1 hour minimum sample time per run)	Methods 10, 10A, or 10B
Dioxins/furans (toxic equivalency basis)	0.41 Nanograms per dry standard cubic meter	3-run average (1 hour minimum sample time per run)	Method 23
Hydrogen Chloride	62 Parts per million by dry volume	3-run average (For Method 26, collect a minimum volume of 120 liters per run. For Method 26A, collect a minimum volume of 1 dry standard cubic meter per run)	Method 26 or 26A
Lead	0.04 Milligrams per dry standard cubic meter	3-run average (1 hour minimum sample time per run)	Method 29

Mercury	0.47 Milligrams per dry standard cubic meter	3-run average (1 hour minimum sample time per run)	Method 29 or 30B or ASTM D6784-02 (Reapproved 2008)
Nitrogen Oxides	388 Parts per million by dry volume	3-run average (1 hour minimum sample time per run)	Methods 7 or 7E
Particulate Matter	70 Milligrams per dry standard cubic meter	3-run average (1 hour minimum sample time per run)	Method 5 or 29
Sulfur Dioxide	20 Parts per million by dry volume	3-run average (1 hour minimum sample time per run)	Method 6 or 6c
Opacity	10 Percent	Three 1-hour blocks consisting of ten 6-minute average opacity values	Method 9

TABLE 2. OPERATING LIMITS FOR WET SCRUBBERS

For these operating parameters	Establish these operating limits	And Monitor Using These Minimum Frequencies		
		Data Measurement	**Data Recording**	**Averaging Time (Calculated each hour as the average of the previous 3 operating hours.)**
Charge rate.	Maximum charge rate.	Continuous	Every hour	Daily (batch units). 3-hour rolling (continuous and intermittent units).
Pressure drop across the wet scrubber or amperage to wet scrubber.	Minimum pressure drop or amperage.	Continuous	Every 15 minutes	3-hour rolling.
Scrubber liquor flow rate.	Minimum flow rate.	Continuous	Every 15 minutes	3-hour rolling.
Scrubber liquor pH.	Minimum pH.	Continuous	Every 15 minutes	3-hour rolling.

TABLE 3. TOXIC EQUIVALENCY FACTORS

Dioxin/Furan Isomer	Toxic Equivalency Factor
2,3,7,8-tetrachlorinated dibenzo-p-dioxin	1
1,2,3,7,8- pentachlorinated dibenzo-p-dioxin	0.5
1,2,3,4,7,8-hexachlorinated dibenzo-p-dioxin	0.1
1,2,3,7,8,9-hexachlorinated dibenzo-p-dioxin	0.1
1,2,3,6,7,8-hexachlorinated dibenzo-p-dioxin	0.1
1,2,3,4,6,7,8-heptachlorinated dibenzo-p-dioxin	0.01
octachlorinated dibenzo-p-dioxin	0.001
2,3,7,8-tetrachlorinated dibenzofuran	0.1
2,3,4,7,8-pentachlorinated dibenzofuran	0.5
1,2,3,7,8-pentachlorinated dibenzofuran	0.05
1,2,3,4,7,8-hexachlorinated dibenzofuran	0.1
1,2,3,6,7,8-hexachlorinated dibenzofuran	0.1
1,2,3,7,8,9-hexachlorinated dibenzofuran	0.1
2,3,4,6,7,8-hexachlorinated dibenzofuran	0.1
1,2,3,4,6,7,8-heptachlorinated dibenzofuran	0.01
1,2,3,4,7,8,9-heptachlorinated dibenzofuran	0.01
octachlorinated dibenzofuran	0.001

TABLE 4. REPORTING REQUIREMENTS

Report	Due Date	Contents	Reference 335-3-.05
Waste Management Plan	No later than the date specified for submittal of the final control plan.	•Waste Management Plan	(11)(*z*)

Initial Test Report	No later than 60 days following the initial performance test.	•Complete test report for the initial performance test. •The values for the site-specific operating limits. •Installation of bag leak detection systems for fabric filters.	(11)(aa)
Annual Report	No later than 12 months following the submission of the initial test report. Subsequent reports are to be submitted no more than 12 months following the previous report.	•Name and address. •Statement and signature by responsible official. •Date of report. •Values for the operating limits. •Highest recorded 3-hour average and the lowest recorded 3-hour average, as applicable, (or 30-day average, if applicable) for each operating parameter recorded for the calendar year being reported. •If a performance test was conducted during the reporting period, the results of the test. •If a performance test was not conducted during the reporting period, a statement that the requirements of (9)(e) were met. •Documentation of periods when all qualified CISWI operators were unavailable for more than 8 hours but less than 2 weeks. •If performance tests are being conducted once every 3 years consistent with (9)(aa), the date of the last 2 performance tests, a comparison of the emission level achieved in the last 2 performance tests to the 75 percent emission limit threshold required in (9)(aa) and a statement as to whether there have been any operational changes since the last performance test that could increase emissions	(11)(bb) & (cc)
Emission Limitation or Operating Limit Deviation Report	By August 1 of that year for data collected during the first half of the calendar year. By February 1 of the following year for data collected during the second half of the calendar year.	•Dates and times of deviations. •Averaged and recorded data for these dates. •Duration and causes for each deviation and the corrective actions taken. •Copy of operating limit monitoring data and any test reports. •Dates, times, and causes for monitor downtime incidents.	(11)(t)1. - 3.

TABLE 4. REPORTING REQUIREMENTS CONT'D

Report	Due Date	Contents	Reference 335-3-.05
Qualified Operator Deviation Notification.	Within 10 days of deviation.	•Statement of cause of deviation. •Description of efforts to have an accessible qualified operator. •The date a qualified operator will be accessible.	(11)(dd)4.(i)
Qualified Operator Deviation Status Report.	Every 4 weeks following deviation.	•Description of efforts to have an accessible qualified operator. •The date a qualified operator will be accessible. •Request for approval to continue operation.	(11)(dd)4.(ii)
Qualified Operator Deviation Notification of Resumed Operation.	Prior to resuming operation.	•Notification that operation will resume.	(11)(dd)4.(iii)

TABLE 5. EMISSION LIMITS FOR INCINERATORS THAT COMMENCED CONSTRUCTION AFTER NOVEMBER 30, 1999, BUT NO LATER THAN JUNE 4, 2010, OR COMMENCED MODIFICATION OR RECONSTRUCTION AFTER JUNE 1, 2001 BUT NO LATER THAN AUGUST 7, 2013

Pollutant	Emission Limitation	Averaging Time	Compliance Method 40 CFR 60 Appendix A
Cadmium	0.0026 Milligrams per dry standard cubic meter	3-run average (collect a minimum volume of 2 dry standard cubic meters)	Method 29 (Use ICPMS for the analytical finish.
Carbon Monoxide	17 Parts per million dry volume	3-run average (1 hour minimum sample time per run)	Methods 10
Dioxins/furans (toxic mass basis)	4.6 Nanograms per dry standard cubic meter	3-run average (collect a minimum volume of 2 dry standard cubic meters)	Method 23
Dioxins/furans (toxic equivalency basis)	0.13 Nanograms per dry standard cubic meter	3-run average (collect a minimum volume of 2 dry standard cubic meters)	Method 23
Hydrogen Chloride	29 Parts per million dry volume	3-run average (For Method 26, collect a minimum volume of 60 liters per run. For Method 26A, collect a minimum volume of 1 dry standard cubic meter per run)	Method 26 or 26A

Lead	0.015 Milligrams per dry standard cubic meter	3-run average (collect a minimum volume of 2 dry standard cubic meters)	Method 29 (Use ICPMS for the analytical finish.
Mercury	0.0048 Milligrams per dry standard cubic meter	3-run average (For Method 29 an ASTM D6784-02 (Reapproved 2008),collect a minimum volume of 2 dry standard cubic meters. For Method 30B, collect a minimum sample as specified in Method 30B)	Method 29 or 30B or ASTM D6784-02 (Reapproved 2008)
Nitrogen Oxides	53 Parts per million dry volume	3-run average (for Method 7E, 1 hour minimum sample time per run)	Methods 7 or 7E
Particulate Matter	34 Milligrams per dry standard cubic meter	3-run average (collect a minimum volume of 1 dry standard cubic meter)	Method 5 or 29
Sulfur Dioxide	11 Parts per million by dry volume	3-run average (1 hour minimum sample time per run)	Method 6 or 6c
Fugitive ash	Visible emissions for no more than 5% of the hourly observation period	Three 1-hour observation periods	Method 22 (Visible emission test)

TABLE 6. EMISSION LIMITS FOR ENERGY RECOVERY UNITS THAT COMMENCED CONSTRUCTION ON OR BEFORE JUNE 4, 2010, OR THAT COMMENCED RECONSTRUCTION OR MODIFICATION AFTER JUNE 4, 2010 BUT NO LATER THAN AUGUST 7, 2013

Pollutant	Emission Limit (Liquid/Gas)	Emission Limit (Solids)	Averaging Time	Compliance Method 40 CFR 60 Appendix A
Cadmium				

	0.023 Milligrams per dry standard cubic meter	Biomass—0.0014 milligrams per dry standard cubic meter. Coal—0.0017 milligrams per dry standard cubic meter.	3-run average (collect a minimum volume of 2 dry standard cubic meters)	Method 29 ICPMS for analytical finish.)
Carbon Monoxide	35 Parts per million dry volume	Biomass—260 parts per million dry volume Coal—95 parts per million dry volume	3-run average (1 hour minimum sample time per run)	Methods 10
Dioxins/furans (total mass basis)	2.9 nanograms per dry standard cubic meter	Biomass—0.52 nanograms per dry standard cubic meter. Coal—5.1 nanograms per dry standard cubic meter. c	3-run average (collect a minimum volume of 4 dry standard cubic meter)	Method 23
Dioxins/furans (toxic equivalency basis)	0.32 Nanograms per dry standard cubic meter	Biomass—0.12 nanograms per dry standard cubic meter Coal—0.075 nanograms per dry standard cubic meter.	3-run average (collect a minimum volume of 4 dry standard cubic meters	Method 23
Hydrogen Chloride	14 Parts per million by dry volume	Biomass—0.20 parts per million dry volume Coal—58 parts per million dry volume	3-run average (for Method 26, collect a minimum of 120 liters; for Method 26A, collect a minimum volume of 1 dry standard cubic meter)	Method 26 or 26A

Lead	0.096 Milligrams per dry standard cubic meter	Biomass—0.014 milligrams per dry standard cubic meter. Coal—0.057 milligrams per dry standard cubic meter.	3-run average (collect a minimum volume of 2 dry standard cubic meters)	Method 29 (Use ICPMS for the analytica l finish.
Mercury	0.0024 Milligrams per dry standard cubic meter	Biomass—0.0022 milligrams per dry standard cubic meter Coal—0.013 milligrams per dry standard cubic meter	3-run average (For Method 29 and ASTM D6784-02 (Reapproved 2008) d, collect a minimum volume of 2 dry standard cubic meters per run. For Method 30B, collect a minimum sample as specified in Method 30B.	Method 29 or 30B or ASTM D6784-02 (Reapprov ed 2008)
Nitrogen Oxides	76 Parts per million dry volume	Biomass—290 parts per million dry volume Coal—460 parts per million dry volume	3-run average (for Method 7E, 1 hour minimum sample time per run)	Methods 7 or 7E

Particulate Matter Filterable	110 milligrams per dry standard cubic meter	Biomass—11 milligrams per dry standard cubic meter Coal—130 milligrams per dry standard cubic meter	3-run average (collect a minimum volume of 1 dry standard cubic meter)	Method 5 or 29 if the unit has an annual average heat input rate less than or equal to 250 MMBtu/hr ; or PM CPMS (as specified in § 60.2710(x)) if the unit has an annual average heat input rate greater than 250 MMBtu/hr .
Sulfur Dioxide	720 Parts per million dry volume	Biomass—7.3 parts per million dry volume Coal—850 parts per million dry volume	3-run average (1 hour minimum sample time per run)	Method 6 or 6c
Fugitive ash	Visible emissions for no more than 5 percent of the hourly observation period	Visible emissions for no more than 5 percent of the hourly observation period	Three 1-hour observation periods	Method 22 (Visible emission test)

TABLE 7. EMISSION LIMITS FOR WASTE-BURNING KILNS THAT COMMENCED CONSTRUCTION ON OR BEFORE JUNE 4, 2010, OR THAT COMMENCED RECONSTRUCTION OR MODIFICATION AFTER JUNE 4, 2010 BUT NO LATER THAN AUGUST 7, 2013			
Pollutant	**Emission Limitation**	**Averaging Time**	**Compliance Method 40 CFR 60 Appendix A**
Cadmium	0.0014 Milligrams per dry standard cubic meter	3-run average (collect a minimum volume of 2 dry standard cubic meters)	Method 29
Carbon Monoxide	110 (long kilns)/790 (preheater/precalciner) parts per million dry volume	3-run average (1 hour minimum sample time per run)	Methods 10
Dioxins/furans (total mass basis)	1.3 Nanograms per dry standard cubic meter.	3-run average (collect a minimum volume of 4 dry standard cubic meters)	Method 23
Dioxins/furans (toxic equivalency basis)	0.075 Nanograms per dry standard cubic meter	3-run average (collect a minimum volume of 4 dry standard cubic meters)	Method 23
Hydrogen Chloride	3.0 Parts per million by dry volume	3-run average (collect a minimum volume of 1 dry standard cubic meter) or 30-day rolling average if HCl CEMS is being used	If a wet scrubber or dry scrubber is used performance test (Method 321 at 40 CFR part 63, appendix A of this part) If a wet scrubber or dry scrubber is not used, HCl CEMS as specified in (9)(j).

Lead	0.014 Milligrams per dry standard cubic meter	3-run average (collect a minimum volume of 2 dry standard cubic meters)	Method 29
Mercury	0.011 Milligrams per dry standard cubic meter OR *58 Pounds per Million Tons of Clinker	30-day rolling average	Mercury CEMS or integrated sorbent trap monitoring system (performance specification 12A or 12B, respectively, of appendix B and procedure 5 of appendix F of 40 CFR 60.)
Nitrogen Oxides	630 Parts per million by dry volume	3-run average (for Method 7E, 1 hour minimum sample time per run)	Methods 7 or 7E
Particulate Matter Filterable	13.5 Milligrams per dry standard cubic meter	30-day rolling average	PM CPMS (as specified in 60.2710(x))
Sulfur Dioxide	600 Parts per million by dry volume	3-run average (for Method 6, collect a minimum of 20 liters; for Method 6C, 1 hour minimum sample time per run)	Method 6 or 6c

***Equivalent Production-Based Limit – See rules 335-3-3-.05(8)(g), 335-3-3-.05(9)(ee), 335-3-3-.05(10)(v), and 335-3-3-.05(11)(ll) for additional requirements.**

TABLE 8. EMISSION LIMITS FOR SMALL, REMOTE INCINERATORS THAT COMMENCED CONSTRUCTION ON OR BEFORE JUNE 4, 2010, OR THAT COMMENCED RECONSTRUCTION OR MODIFICATION AFTER JUNE 4, 2010 BUT NO LATER THAN AUGUST 7, 2013			
Pollutant	**Units (7 percent oxygen, dry basis, except opacity)**	**Averaging Time**	**Compliance Method 40 CFR 60 Appendix A**

Cadmium	0.95 milligrams per dry standard cubic meter	3-run average (collect a minimum volume of 1 dry standard cubic meters per run)	Method 29
Carbon Monoxide	64 parts per million dry volume	3-run average (1 hour minimum sample time per run)	Methods 10
Dioxins/furans (total mass basis)	4,400 nanograms per dry standard cubic meter b	3-run average (collect a minimum volume of 1 dry standard cubic meters per run)	Method 23
Dioxins/furans (toxic equivalency basis)	180 nanograms per dry standard cubic meter b	3-run average (collect a minimum volume of 1 dry standard cubic meters)	Method 23
Hydrogen Chloride	300 parts per million dry volume	3-run average (For Method 26, collect a minimum volume of 120 liters per run. For Method 26A, collect a minimum volume of 1 dry standard cubic meter per run)	Method 26 or 26A
Lead	2.1 milligrams per dry standard cubic meter	3-run average (collect a minimum volume of 1 dry standard cubic meters)	Method 29 (Use ICPMS for the analytical finish.
Mercury	0.0053 milligrams per dry standard cubic meter	3-run average (For Method 29 and ASTM D6784-02 (Reapproved 2008),ccollect a minimum volume of 2 dry standard cubic meters per run. For Method 30B, collect a minimum sample as specified in Method 30B at 40 CFR part 60, appendix A)	Method 29 or 30B or ASTM D6784-02 (Reapproved 2008)
Nitrogen Oxides	190 parts per million dry volume	3-run average (for Method 7E, 1 hour minimum sample time per run)	Methods 7 or 7E
Particulate Matter (Filterable)	270 milligrams per dry standard cubic meter	3-run average (collect a minimum volume of 1 dry standard cubic meters)	Method 5 or 29

Sulfur Dioxide	150 parts per million dry volume	3-run average (for Method 6, collect a minimum of 20 liters per run; for Method 6C, 1 hour minimum sample time per run)	Method 6 or 6c
Fugitive Ash	Visible emissions for no more than 5 percent of the hourly observation period	Three 1-hour observation periods	Method 22 (Visible emissions test)

Author: Ronald W. Gore.
Statutory Authority: Code of Alabama 1975, §§22-28-14, 22-22A-5, 22-22A-6, and 22-22A-8.
History: Effective: March 14, 2002. **Amended:** Effective: October 2, 2003; **Amended:** Effective: July 11, 2006; **Amended:** Effective: April 1, 2014; **Amended:** Effective: June 09, 2017; **Amended:** Effective: December 8, 2017; **Amended:** Filed: February 28, 2020; Effective: April 13, 2020.

ALABAMA DEPARTMENT OF ENVIRONMENTAL MANAGEMENT
AIR DIVISION - AIR POLLUTION CONTROL PROGRAM

CHAPTER 335-3-4
CONTROL OF PARTICULATE EMISSIONS

TABLE OF CONTENTS

335-3-4-.01 Visible Emissions
335-3-4-.02 Fugitive Dust and Fugitive Emissions
335-3-4-.03 Fuel Burning Equipment
335-3-4-.04 Process Industries - General
335-3-4-.05 Small Foundry Cupola
335-3-4-.06 Cotton Gins
335-3-4-.07 Kraft Pulp Mills
335-3-4-.08 Wood Waste Boilers
335-3-4-.09 Coke Ovens
335-3-4-.10 Primary Aluminum Plants
335-3-4-.11 Cement Plants
335-3-4-.12 Xylene Oxidation Process
335-3-4-.13 Reserved
335-3-4-.14 Grain Elevators
335-3-4-.15 Secondary Lead Smelters
335-3-4-.16 Reserved
335-3-4-.17 Steel Mills Located in Etowah County

335-3-4-.01 Visible Emissions.

(1) Visible Emissions Restrictions for Stationary Sources.

(a) Except as provided in subparagraphs (b), (c), (d), or (e) of this paragraph, and paragraph (3) of this rule, no person shall discharge into the atmosphere from any source of emission, particulate of an opacity greater than that designated as twenty percent (20%) opacity, as determined by a six (6) minute average.

(b) For a person not covered by paragraphs (3), (4), (5), and (6) of this rule, during one six (6) minute period in any sixty (60) minute period, a person may discharge into the atmosphere from any source of emission, particulate of an opacity not greater than that designated as forty percent (40%) opacity.

(c) The Director may approve exceptions to this rule or specific sources which hold permits under chapter 335-3-14; provided however, such exceptions may be made for startup, shutdown, load change, and rate change or other short, intermittent periods of time upon terms approved by the Director and made a part of such permit.

(d) The Director may also approve exceptions to this rule in accordance

with the following provisions:

1. The owner or operator of the affected source shall request in writing for the Director to provide an opportunity for the determination of the opacity of emissions during sampling and testing required pursuant to rule 335-3-1-.08.

2. Upon receipt from such owner or operator of the written report of the results of the sampling and testing conducted pursuant to rule 335-3-1-.08, the Director will make a finding concerning compliance with opacity and other applicable standards.

3. If the Director determines that an affected source is in compliance with all applicable standards for which the sampling and testing are being conducted in accordance with rule 335-3-1-.08 but during such sampling and testing the affected source fails to meet any applicable opacity standard, he shall notify the owner or operator and advise him that he may petition the Director within ten (10) days of receipt of notification to make appropriate adjustment to the opacity standard for the affected source.

4. The Director may grant such a petition upon a demonstration by the owner or operator that the affected source and associated air pollution control equipment were operated and maintained in a manner to minimize the opacity of emissions during the sampling and testing; that such sampling and testing were performed under the conditions established by the Director; and that the affected source and associated air pollution control equipment were incapable of being adjusted or operated to meet the applicable opacity standard.

5. Upon the conclusion of sampling and testing as required above, the Director may establish an opacity standard for the affected source at a level at which the source will be able, as indicated by the sampling and testing, to meet the opacity standard at all times during which the source is meeting the mass emissions standards. If sufficient data is not available to the Director to establish such opacity standards, the Director may require additional sampling and testing as necessary to make such a determination of opacity.

(e) The provisions of this paragraph shall not apply to combustion sources in single-family and duplex dwellings where such sources are used for heating or other domestic purposes.

(2) For a person subject to subparagraph (1)(b) of this rule, compliance with opacity standards in this rule shall be determined by conducting observations in accordance with Reference Method 9 in Appendix A, 40 CFR Part 60, as the same may be amended requiring a six (6) minute average as determined by twenty-four (24) consecutive readings, at intervals of fifteen (15) seconds each.

(3) The conditions in paragraphs (4) and (5) of this rule apply to each emissions unit that meets all of the following requirements:

(a) A Continuous Opacity Monitoring System (COMS) is used for

indication of opacity of emissions;

(b) With respect to opacity limitations, the units are subject only to the opacity provisions stated in paragraph (1) of this rule; and

(c) The COMS system utilized is required to comply with the requirements of 40 CFR 60.13 or 40 CFR 75.14 (if applicable) and is required to be certified in accordance with the requirements of 40 CFR 60, Appendix B, Performance Specification 1.

(4) Except as otherwise exempt under subparagraphs (1)(c) or (1)(d) of this rule, no permittee shall discharge into the atmosphere from any source of emission, particulate of an opacity greater than that designated as twenty percent (20%) opacity, as determined by a six (6) minute average, except that during each calendar quarter, the permittee may discharge into the atmosphere from any emissions unit qualifying under paragraph (3) of this rule, particulate with an opacity exceeding 20% for not more than twenty-four (24), six (6) minute periods in any calendar day, if such periods do not exceed 2.0 percent of the source calendar quarter operating hours for which the opacity standard is applicable and for which the COMS is indicating valid data.

(5) No permittee shall discharge into the atmosphere from any source of emission particulate of an opacity greater than 22% (excluding exempt periods allowed under subparagraphs (1)(c) and (1)(d) of this rule) averaged over each calendar day.

(6) For a person subject to paragraph (4) of this rule, compliance with the opacity standards in this rule shall be determined by COMS data.

(7) For emissions units described in paragraph (3) above, the permittee shall comply with paragraphs (4) and (5) within 6 months of EPA approval of paragraphs (3), (4), (5), and (6). Until 6 months after EPA approval of paragraphs (3), (4), (5), and (6), emissions units described by paragraph (3) above shall be subject to the emission limit in subparagraph (1)(a) of this rule, the exceptions in subparagraphs (1)(b), (1)(c) and (1)(d) of this rule, and the compliance measurement techniques in paragraph (2) of this rule.

Author: James W. Cooper and John E. Daniel; Ronald W. Gore.
Statutory Authority: Code of Alabama 1975, §§22-28-14, 22-22A-5, 22-22A-6, and 22-22A-8.
History: Effective Date: January 18, 1972.
Amended: June 5, 1979; November 21, 1996; October 2, 2003; September 30, 2008.

335-3-4-.02 Fugitive Dust and Fugitive Emissions.[1]

(1) No person shall cause, suffer, allow, or permit any materials to be handled, transported, or stored; or a building, its appurtenances, or a road to be used, constructed, altered, repaired, or demolished without taking reasonable precautions to prevent particulate matter from becoming airborne. Such

reasonable precautions shall include, but not be limited to, the following:

(a) Use, where possible, of water or chemicals for control of dust in the demolition of existing buildings or structures, construction operations, the grading of roads, or the clearing of land;

(b) Application of asphalt, oil, water, or suitable chemicals on dirt roads, materials stock piles, and other surfaces which create airborne dust problems;

(c) Installation and use of hoods, fans, and fabric filters (or other suitable control devices) to enclose and vent the handling of dusty materials. Adequate containment methods shall be employed during sandblasting or other similar operations.

(2) Visible Emissions Restrictions Beyond Lot Line. No person shall cause or permit the discharge of visible fugitive dust emissions beyond the lot line of the property on which the emissions originate.

(3) When dust, fumes, gases, mist, odorous matter, vapors, or any combination thereof escape from a building or equipment in such a manner and amount as to cause a nuisance or to violate any rule or regulation, the Director may order that the building or equipment in which processing, handling, and storage are done be tightly closed and ventilated in such a way that all air and gases and air or gas-borne material leaving the building or equipment are treated by removal or destruction of air contaminants before discharge to the open air.

Author: James W. Cooper and John E. Daniel.
Statutory Authority: Code of Alabama 1975, §§22-28-14, 22-22A-5, 22-22A-6, and 22-22A-8.
History: Effective Date: January 18, 1972.
Amended: April 3, 1979; September 18, 1985; November 21, 1996; July 15, 1999.

---

[1] Section 4.2.1 and 4.2.2 of the Alabama Air Pollution Control Commission rules and Regulations now cited as ADEM Administrative Code rule 335-3-4-.02(1) and 335-3-4-.02(2) were declared unconstitutional by the Alabama Supreme Court in Ross Neely Express, Inc. v. Alabama Department of Environmental Management, 437 So. 2d 82 (Ala. 1983).

335-3-4-.03 Fuel Burning Equipment.

(1) Class 1 Counties: No person shall cause or permit the emission of particulate matter from fuel-burning equipment in a Class 1 County in excess of the amount shown in Table 4-1 for the heat input allocated to such source. For sources in Class 1 Counties, interpolation of the data in Table 4-1 for heat input values between 10 million BTU/hr and 250 million BTU/hr shall be accomplished by the use of the equation:

$$\mathbf{E} = \mathbf{1.38H}^{-0.44}$$

where: **E** = Emissions in lb/million BTU

H = Heat Input in millions of BTU/hr

(2) Class 2 Counties: No person shall cause or permit the emission of particulate matter from fuel-burning equipment in a Class 2 County in excess of the amount shown in Table 4-1 for the heat input allocated to such source. For sources in Class 2 Counties, interpolation of the data in Table 4-1 for heat input values between 10 million BTU/hr and 250 million BTU/hr shall be accomplished by the use of the equation:

$$\mathbf{E} = \mathbf{3.109H}^{-0.589}$$

where: **E** = Emissions in lb/million BTU

H = Heat Input in millions of BTU/hr

(3) For purposes of this rule, the total heat input from all similar fuel combustion units which discharge particulate matter through a common stack at a plant or premises shall be used for determining the maximum allowable emission of particulate matter.

(4) New fuel-burning sources emitting particulate matter shall be subject to the rules and regulations for Class 1 Counties, paragraph (1) of this rule, regardless of their location.

Table 4-1
Allowable Particulate Matter Emission Based On Heat Input

Heat Input (Millions of BTU/hr)	Allowable Emission (lb/million BTU)	
	Class 1 County	Class 2 County
1	0.5	0.8
10	0.5	0.8
20	0.37	0.53
40	0.27	0.35
60	0.23	0.28
80	0.20	0.24
100	0.18	0.21
150	0.15	0.16
200	0.13	0.14
250	0.12	0.12
1,000,000	0.12	0.12

(5) In lieu of the particulate emission limitations contained in paragraph (1) of this rule for existing coal fired boilers at pulp mills in Talladega County having a rated capacity of up to 300 million BTU per hour, the allowable particulate emission limit shall be 0.1 lb/MMBTU.

Author: James W. Cooper and John E. Daniel.
Statutory Authority: Code of Alabama 1975, §§22-28-14, 22-22A-5, 22-22A-6, and 22-22A-8.
History: Effective Date: January 18, 1972.
Amended: October 10, 1984; November 21, 1996.

335-3-4-.04 Process Industries - General.

(1) Class 1 Counties: No person shall cause or permit the emission of particulate matter in any one hour from any source in a Class 1 County in excess of the amount shown in Table 4-2 for the process weight per hour allocated to such source. For sources in Class 1 Counties, interpolation of the data in Table 4-2 for the process weight per hour values up to 60,000 lbs/hr shall be accomplished by use of the equation:

$$\mathbf{E} = \mathbf{3.59P}^{0.62}$$

($\mathbf{P}$ <30 tons/hr)

and interpolation and extrapolation of the data for process weight per hour values equal to or in excess of 60,000 lbs/hr shall be accomplished by use of the equation:

$$\mathbf{E} = \mathbf{17.31P}^{0.16}$$

($\mathbf{P}$ ≥30 tons/hr)

Where **E** = Emissions in pounds per hour

P = Process weight per hour in tons per hour.

(a) For the existing four (4) sinter machines in Jefferson County, the allowable filterable particulate limit from each windbox exhaust shall not exceed 0.030 grains per dry standard cubic foot with the additional requirement that total filterable particulate emissions from all windbox exhausts and discharge ends not exceed 140 pounds per hour.

Compliance with the total emission limit shall be achieved by operating no more than three (3) of the four (4) sinter machines simultaneously.

(2) Class 2 Counties: No person shall cause or permit the emission of particulate matter in any one hour from any source in a Class 2 County in excess of the amount shown in Table 4-2 for the process weight per hour allocated to such source. For sources in Class 2 Counties, interpolation of the data in Table 4-2 for the process weight per hour values up to 60,000 lbs/hr shall be accomplished by use of the equation:

$$\mathbf{E} = \mathbf{4.10P}^{0.67}$$

($\mathbf{P}$ <30 tons/hr)

and interpolation and extrapolation of the data for process weight per hour values equal to or in excess of 60,000 lbs/hr shall be accomplished by use of the equation:

$$\mathbf{E} = \mathbf{55.0P^{0.11} - 40}$$

($\mathbf{P} \geq 30$ tons/hr)

where: **E** = Emissions in pounds per hour

P = Process weight per hour in tons per hour.

(3) Where the nature of any process or operation or the design of any equipment is such as to permit more than one interpretation of this rule, the interpretation that results in the minimum value for allowable emission shall apply.

(4) For purposes of this rule, the total process weight from all similar process units at a plant or premises shall be used for determining the maximum allowable emission of particulate matter that passes through a stack or stacks.

(5) New sources subject to this rule emitting particulate matter shall be subject to the rules and regulations for Class 1 Counties, contained in paragraph (1) of this rule, regardless of their location.

Table 4-2
Allowable Particulate Matter Emission Based On Process Weight Rate

Process Weight Rate (lb/hr)	Allowable Emission Rate (lb/hr)	
	Class 1 County	Class 2 County
100	0.56	0.55
500	1.52	1.62
1,000	2.34	2.57
5,000	6.33	7.57
10,000	9.76	12.05
20,000	14.97	19.18
60,000	29.83	39.96
80,000	31.23	42.53
120,000	33.33	46.30
160,000	34.90	49.06
200,000	36.17	51.28
1,000,000	46.79	68.96

Author: James W. Cooper and John E. Daniel.
Statutory Authority: Code of Alabama 1975, §§22-28-14, 22-22A-5, 22-22A-6, and 22-22A-8.
History: Effective Date: January 18, 1972.
Amended: April 6, 1983; November 21, 1996.

335-3-4-.05 Small Foundry Cupola.

(1) No person shall cause or permit the emission of particulate matter in any one (1) hour from any small foundry cupola source in excess of the amount shown in Table 4-3 for the process weight per hour allocated to such source.

(2) Where the nature of any process or operation or the design of any equipment is such as to permit more than one interpretation of this rule, the interpretation that results in the minimum value for allowable emission shall apply.

(3) For purposes of this rule, the total process weight from all similar process units at a plant or premises shall be used for determining the maximum allowable emission of particulate matter that passes through a stack or stacks.

(4) Foundry cupolas with a process weight rate greater than 50,000 pounds per hour shall be subject to the rules and regulations of rule 335-3-4-.04.

Table 4-3
Allowable Particulate Matter Emission Based On Process Weight Rate For Small Foundry Cupolas

Process Weight (lb/hr)	Allowable Emission Rate (lb/hr)
1,000	3.05
2,000	4.70
3,000	6.35
4,000	8.00
5,000	9.58
6,000	11.30
7,000	12.90
8,000	14.30
9,000	15.50
10,000	16.65
12,000	18.70
16,000	21.60
18,000	23.40
20,000	25.10
30,000	31.30
40,000	37.00
50,000	42.40

Author: James W. Cooper and John E. Daniel.
Statutory Authority: Code of Alabama 1975, §§22-28-14, 22-22A-5, 22-22A-6, and 22-22A-8.
History: Effective Date: January 18, 1972.
Amended:

335-3-4-.06 Cotton Gins.

(1) No person shall cause or permit the emission of particulate matter in any one (1) hour from any cotton gin operation in excess of the amount shown in Table 4-4 for the process weight per hour allocated to such operation. Particulate matter emissions subject to this rule include process emissions and incinerator emissions if any; provided, however, that this shall in no way relieve or affect the application of chapter 335-3-3 to open burning and incineration at cotton gin operations.

(2) Where the nature of any process or operation or the design of any equipment is such as to permit more than one interpretation of this rule, the interpretation that results in the minimum value for allowable emission shall apply.

(3) For purposes of this rule, the total process weight from all similar process units at a plant or premises shall be used for determining the maximum allowable emission of particulate matter that passes through a stack or stacks.

Table 4-4
Allowable Particulate Matter Emission Based On Process Weight Rate For Cotton Gins

Process Weight Rate (lb/hr)	Allowable Emission Rate (lb/hr)	Process Weight Rate (lb/hr)	Allowable Emission Rate (lb/hr)
1,000	1.6	9,000	13.7
1,500	2.4	10,000	15.2
2,000	3.1	12,000	18.2
2,500	3.9	14,000	21.2
3,000	4.7	16,000	24.2
3,500	5.4	18,000	27.2
4,000	6.2	20,000	30.1
5,000	7.7	30,000	44.9
6,000	9.2	40,000	59.7
7,000	10.7	50,000	64.0
8,000	12.2	≥60,000	67.4

Author: James W. Cooper and John E. Daniel.
Statutory Authority: Code of Alabama 1975, §§22-28-14, 22-22A-5, 22-22A-6, and 22-22A-8.
History: Effective Date: January 18, 1972.
Amended:

335-3-4-.07 Kraft Pulp Mills.

(1) Applicability. This rule applies to manufacturing facilities for the pulping of wood and the preparation and recovery of associated chemicals by

the kraft process, including combined recovery systems serving other processes such as neutral sulfite pulping.

(2) No person shall cause or permit the emission of particulate matter from any kraft pulp mill in excess of the amounts provided as follows:

(a) From all recovery furnaces, not more than 4.0 pounds per ton of pulp.

(b) From all smelt dissolver vents, not more than 0.5 pounds per ton.

(c) From all lime kilns, not more than 1.0 pounds per ton of pulp.

(3) The pulp production rates for kraft mills referred to in this rule shall be tons of unbleached air-dried kraft pulp.

(4) Notwithstanding the specific limits set forth in this rule, in order to maintain the lowest possible emission of air contaminants, the highest and best practicable treatment and control for particulate matter currently available shall be provided for new kraft pulp mills.

(5) For chemical recovery boilers constructed before 1972 at kraft pulp mills in Autauga County, the allowable particulate emissions shall be 1.11 pounds per air-dried ton of pulp.

(6) In lieu of the particulate emission limitations contained in subparagraph (2)(a) of this rule, for chemical recovery boilers constructed before 1973 at pulp mills in Talladega County, the allowable particulate emission limits shall be 2.5 pounds per air-dried ton of unbleached kraft pulp.

(7) In lieu of the particulate emission limitations contained in subparagraph (2)(b) of this rule, for smelt dissolver tanks constructed before 1973 at pulp mills in Talladega County, the allowable particulate emission limit shall be 0.3 pounds per air-dried ton of unbleached kraft pulp.

Author: James W. Cooper and John E. Daniel.
Statutory Authority: Code of Alabama 1975, §§22-28-14, 22-22A-5, 22-22A-6, and 22-22A-8.
History: Effective Date: July 26, 1972.
Amended: March 7, 1984; October 10, 1984; November 21, 1996.

335-3-4-.08 Wood Waste Boilers.

(1) Applicability. This rule applies to boilers and other indirect heat exchangers using not less than thirty percent (30%) wood waste or wood by-products as fuel measured by heat input.

(2) Except as provided in paragraph (3) of this rule, no person shall cause or permit the emission of particulate matter from any existing wood waste boilers in excess of 0.30 grains per standard dry cubic foot adjusted to fifty

percent (50%) excess air. Provided that: for any existing wood waste boiler which must be modified in order to meet the emission limitations of this rule, no person shall cause or permit the emission of particulates in excess of:

(a) 0.17 grains per standard dry cubic foot, adjusted to fifty percent (50%) excess air for combination gas and wood waste boilers.

(b) 0.20 grains per standard dry cubic foot, adjusted to 50 percent excess air for combination oil and wood waste boilers.

(c) 0.23 grains per standard dry cubic foot, adjusted to fifty percent (50%) excess air for combination coal and wood waste boilers.

(d) 0.20 grains per standard dry cubic foot, adjusted to fifty percent (50%) excess air for boilers using wood waste only.

Author: James W. Cooper and John E. Daniel.
Statutory Authority: Code of Alabama 1975, §§22-28-14, 22-22A-5, 22-22A-6, and 22-22A-8.
History: Effective Date: July 26, 1972.
Amended: January 27, 1981; December 9, 1983; October 10, 1984; November 21, 1996; September 7, 2000; June 2, 2017.

335-3-4-.09 Coke Ovens.

(1) Applicability. The provisions of this rule shall apply to the production of coke in existing conventional slot-oven coke batteries with the exception of paragraph (10) of this rule which applies to new batteries.

(2) Unloading and Transfer of Coal and Coke. Every person operating coke ovens shall apply all reasonable measures to prevent emissions from coal unloading, transfer, and coke transfer.

(3) Charging. There shall be no visible emissions during the charging cycle from the charging holes or the larry car of any battery with an opacity which is greater than twenty percent (20%) except for an average period or periods not to exceed three (3) minutes of any consecutive sixty (60) minutes on batteries with less than seventy (70) ovens nor more than four (4) minutes of any consecutive sixty (60) minutes on batteries with seventy (70) ovens or more.

(4) Pushing.

(a) There shall be no visible emissions during the pushing cycle, other than water mist or vapor, with an opacity which is greater than forty percent (40%) for more than one (1) push per hour per battery.

(b) This paragraph specifically exempts existing conventional slot-oven coke batteries with forty (40) ovens located in Tuscaloosa County from

subparagraph (a) above and imposes the following requirements:

1. There shall be no visible emissions during the pushing cycle, other than water mist or vapor, with an opacity which is greater than forty percent (40%) for more than two (2) pushes per hour per battery.

(c) Compliance with subparagraphs (a) and (b) of this paragraph shall be determined by dividing by four (4) the total number of pushes greater than forty percent (40%) opacity, observed during a four (4) hour observation period.

(d) Should the observation period include intervals of non-activity, (e.g., when the common coke car is servicing another battery) such intervals shall be included for purposes of determining compliance, provided that the average number of pushes per hour coincides with the average number of pushes per hour required by the normal production cycle of the battery. Intervals such as meal breaks, scheduled breaks when not on a twenty-four (24) hour pushing schedule, or intervals greater than fifteen (15) minutes due to malfunction of equipment cannot be included in the observation period.

(e) For purposes of this paragraph, "normal production cycle" shall mean the average number of pushes per hour determined by taking an arithmetic average of the pushing schedules of the previous ten (10) days. (The denominator to be based on the actual number of hours the pushing machine was scheduled to operate.)

(f) Observation Procedures.

1. The inspector shall evaluate the criteria listed below and select the most appropriate point at which to observe the visible emissions during the pushing cycle.

(i) The inspector should position himself as close to the source of pushing emissions as practical.

(ii) The inspector should observe pushing emissions against the sky.

(iii) The inspector should stand with the sun behind him, if possible, and with the emissions moving in any direction except directly toward or away from the inspector.

(5) Topside Emissions.

(a) Any leak discovered on the topside of a battery shall be wet sealed or the oven shall not be recharged until the necessary repairs are made.

(b) At no time shall there be leaks in more than ten percent (10%) of the offtake piping and no more than five percent (5%) of the charging hole lids on any one battery.

(6) Coke Oven Doors.

(a) There shall be no visible emissions, except non-smoking flame, from any opening on the coke oven doors from more than fifteen percent (15%) of the coke oven doors on any battery at any time.

(b) If a self-sealing door fails to seal during the coking cycle, it shall be adjusted, repaired, or replaced prior to a subsequent charge of oven.

(c) Luted doors which fail to seal after the oven is charged shall be reluted promptly.

(d) Every person operating coke ovens shall have a facility to maintain and repair coke oven doors and shall maintain an inventory of one (1) coke oven door per twelve (12) ovens operated.

(7) Oven Maintenance.

(a) All ovens shall be maintained in good condition to promote complete coking of coal.

(b) All coke oven cracks are to be sealed as soon as practicable after they are detected.

(c) As directed by the Director, reasonable records of the maintenance of oven doors, oven burners, and oven interiors are to be made and retained for a reasonable time.

(8) Combustion Stacks. There shall be no visible emissions, other than water mist or vapor, with an opacity greater than twenty percent (20%) from any stack except for a period or periods aggregating not more than three (3) minutes in any consecutive sixty (60) minutes.

(9) Quenching.

(a) No person shall operate a coke oven plant without baffles installed and properly operating in the quench towers.

(b) Water introduced to the quenching station must be of a quality approved by the Director.

(10) Notwithstanding the specific limits set forth in this rule, in order to maintain the lowest possible emission of air contaminants, the highest and best practicable treatment and control for particulate matter currently available shall be provided for any new coke producing facilities.

Author: James W. Cooper and John E. Daniel.
Statutory Authority: Code of Alabama 1975, §§22-28-14, 22-22A-5, 22-22A-6, and 22-22A-8.
History: Effective Date: July 26, 1972.
Amended: May 28, 1974; July 11, 1978; September 18, 1985, September 21,

1989; November 21, 1996; September 7, 2000.

335-3-4-.10 Primary Aluminum Plants.

(1) Applicability. This rule applies to existing primary aluminum plants which will or do operate for the purpose of or related to producing aluminum metal from aluminum oxide (alumina).

(2) Emission Limits. The emission of particulate matter to the atmosphere from the baking of carbon anodes and from the reduction process (potlines) of any primary aluminum reduction plant shall not exceed twenty-two (22) pounds per ton of aluminum produced on a daily basis.

(3) Compliance. Each primary aluminum plant shall be in compliance with the provisions of this rule at the earliest possible date, but not later than May 31, 1975. Nothing in this rule shall negate the requirement for obtaining permits or submitting compliance schedules as required by these rules and regulations.

Author: Sue R. Robertson.
Statutory Authority: Code of Alabama 1975, §§22-28-14, 22-22A-5, 22-22A-6, and 22-22A-8.
History: Effective Date: January 30, 1973.
Amended: November 27, 1973.

335-3-4-.11 Cement Plants.

(1) Applicability. This rule applies to:

(a) Existing cement plants that have a process weight that is greater than 88.7 tons per hour.

(b) All existing cement plants in the primary nonattainment area for suspended particulates in Mobile County (Appendix D).

(2) New cement plants.

(3) This rule specifically exempts new cement plants from rule 335-3-4-.04(5).

(4) Emission Limits.

(a) No owner or operator shall cause, permit, or allow the emission of particulate matter from the kiln which is in excess of 0.30 pounds per ton of feed to the kiln, maximum two (2) hour average.

(b) No owner or operator shall cause, permit, or allow the emission of particulate matter from the clinker cooler which is in excess of 0.10 pounds per ton of feed to the kiln, maximum two (2) hour average.

(5) Compliance. Those cement plants located in the primary nonattainment area for suspended particulates in Mobile County (Appendix D) shall be in compliance with these provisions by January 1, 1982 and shall adhere to the increments of progress contained in the following schedule:

(a) Final plans for the emission control system must be submitted before December 31, 1979.

(b) Contracts for the emission control system must be awarded or orders must be issued for purchase of component parts to accomplish emission control before July 1, 1980.

(c) Initiation of on-site construction or installation of the emission control equipment must begin before December 31, 1980.

(d) On-site construction or installation of the emission control equipment must be complete before August 31, 1981.

(e) Final compliance shall be demonstrated before January 1, 1982.

(6) Exception. Cement plants located in the primary nonattainment area for suspended particulates in Mobile County (Appendix D) which shut down prior to December 31, 1982 will not be subject to the requirements contained in this rule upon the posting of a surety bond in the amount of $100,000, such surety bond contingent on shutting down the facility and with no provision for extension.

Author: Jack Bryant.
Statutory Authority: Code of Alabama 1975, §§22-28-14, 22-22A-5, 22-22A-6, and 22-22A-8.
History: Effective Date: March 25, 1975.
Amended: April 3, 1979; November 21, 1996.

335-3-4-.12 Xylene Oxidation Process.

(1) Applicability. The provisions of this rule shall apply to all xylene oxidation processes. Each process system shall be considered as a separate process unit.

(2) No person shall cause or permit the emissions of particulate matter in any one hour from any xylene oxidation process in excess of the amount calculated by use of the equations:

$$\mathbf{E} = \mathbf{2.75P}^{0.62}$$

$$\mathbf{E} = \mathbf{13.15P}^{0.16}$$

($\mathbf{P}$ <30 tons/hr) ($\mathbf{P}$ ≥30 tons/hr)

where: **E** = Emissions in pounds per hour

P = Process weight per hour in tons per hour

(3) Where a thermal oxidizer is used for the reduction of process waste from a xylene oxidation process and no other waste streams are added, this thermal oxidizer shall be considered a part of the process system.

Author: Richard E. Grusnick.
Statutory Authority: Code of Alabama 1975, §§22-28-14, 22-22A-5, 22-22A-6, and 22-22A-8.
History: Effective Date: September 12, 1978.
Amended:

335-3-4-.13 Reserved.

335-3-4-.14 Grain Elevators.

(1) Applicability. This rule applies to existing grain elevators which have a permanent storage capacity of more than 88,000 m^3 located in Mobile County, provided, however, that it does not apply to grain elevators located at animal food manufacturers, pet food manufacturers, cereal manufacturers, breweries, and livestock feedlots.

(2) Emission Limit. No owner or operator subject to this rule shall cause, suffer, or allow the discharge into the atmosphere of any fugitive emission from:

(a) Any barge or ship loading station which exhibits greater than twenty percent (20%) opacity. Said emission limit shall be achieved by:

1. A telescoping loading spout which is kept extended to the grain surface and ventilation applied at the end of the spout to a fabric filter.

2. A system demonstrated to have control efficiency equivalent to or greater than provided under subparagraph (a)1. of this paragraph and approved by the Director.

(b) Any barge or ship unloading station unless operated as follows:

1. The unloading leg shall be enclosed from the top (including the receiving hopper) and ventilation to a control device shall be maintained on both sides of the leg and the grain receiving hopper.

2. The total rate of air ventilation shall be at least 32.1 actual cubic meters per cubic meter of grain handling capacity.

3. The owner or operator may use other methods of emission control demonstrated to have control efficiency equivalent to or greater than provided under subparagraphs (b)1. and 2. above and approved by the Director.

(3) Compliance. Affected facilities shall be in compliance with the provisions of this rule at the earliest possible date, but no later than December 31, 1982 and shall adhere to the increments of progress contained in the following schedule:

(a) Final plans for the emission control system must be submitted before January 1, 1981.

(b) Contracts for the emission control systems must be awarded or orders must be issued for purchase of component parts to accomplish emission control before June 30, 1981.

(c) Initiation of on-site construction or installation of the emission control equipment must begin before August 31, 1981.

(d) On-site construction or installation of the emission control equipment must be completed before September 30, 1982.

(e) Final compliance shall be demonstrated before December 31, 1982.

Author: Marilyn G. Elliott.
Statutory Authority: Code of Alabama 1975, §§22-28-14, 22-22A-5, 22-22A-6, and 22-22A-8.
History: Effective Date: April 3, 1979.
Amended: November 21, 1996.

335-3-4-.15 Secondary Lead Smelters.

(1) All blast (cupola) or reverberatory furnaces at a secondary lead smelter must be equipped with a capture system for fugitive emissions from the tapping and charging operations with the exception of a reverberatory furnace lead tap. Such capture systems, including hoods, ducts, and fans, shall be designed, operated and maintained to achieve maximum reasonable capture and shall be vented to a control device with at least 99.5 percent collection efficiency.

(2) All alloying kettles or pots at a secondary lead smelter must be equipped with a vented cover that will be in place at all times the kettle contains molten lead except when access is necessary for casting or refining operations. The capture system, including covers, ducts, and fans, shall be designed, operated and maintained to achieve maximum reasonable capture and shall be vented to a control system with at least 90 percent collection efficiency.

(3) No owner or operator of a secondary lead smelter shall discharge or cause the discharge into the atmosphere from a blast (cupola) or reverberatory furnace primary exhaust stack any gases which contain particulate matter in excess of 50.0 mg/dscm (0.022 gr/dscf).

(4) Owners and operators of a secondary lead plant shall minimize fugitive

dust at the plant by good housekeeping practices that will include: frequent sweeping of the plant and grounds; shielding the handling of flue dust from the wind; and enclosing, sheltering or otherwise treating all flue dust storage piles to prevent wind erosion.

(5) Compliance. Affected facilities shall be in compliance with the provisions of paragraphs (1) through (4) of this rule at the earliest possible date, but no later than October 31, 1982.

(6) This paragraph applies to existing secondary lead smelters located in Pike County.

(a) Visible emissions escaping the capture system for the charging door shall not exceed 10% opacity when charging the blast furnace as determined by 40 CFR 60, Appendix A, Method 9 excluding Section 2.5. Visible emissions escaping the capture system for the closed charging door on the blast furnace shall not exceed 5% opacity during furnace operation as determined by 40 CFR 60, Appendix A, Method 9 excluding Section 2.5.

(b) Visible emissions escaping the capture system for the slag tap and lead tap on blast furnaces shall not exceed 1% opacity as determined by 40 CFR 60, Appendix A, Method 9.

(c) All lead bearing material (excluding the material from the battery breaking operation, material stored in closed containers, and other material which has been excluded in writing by the Director) will be unloaded and stored in enclosed buildings. These buildings shall have no openings directly to the atmosphere except doors which may be opened only during egress or ingress or while material is being added or removed from the buildings. The buildings will be constructed such that stored material is transported to the smelter building without leaving an enclosed area.

(d) All paved areas external to buildings on which raw materials are handled will be clearly marked and kept wet by watering devices so that no visible emissions are observed emanating from the paved areas. All vehicles leaving the areas so designated by this rule shall have their wheels and undercarriages washed immediately prior to leaving the area. Records must be kept of all vehicles leaving the area. Said records shall be maintained for a minimum of two years following date of recorded information.

(e) Paved areas not designated as necessitating wetting by subparagraph (d) of this paragraph above shall be vacuum swept twice daily except under specific conditions as approved by the Director. Records must be kept documenting when sweeping is done and any reason for not sweeping (such as equipment breakdown, inclement weather conditions). Said records shall be maintained for a minimum of two years following date of recorded information.

(f) Unpaved areas will be planted with grass or other ground cover or treated with lignosulfonate or equivalent surfactant on a schedule approved in

writing by the Director. An evergreen vegetation boundary approved by the Director shall be planted and maintained on the northwest and north side of the plant.

(g) Compliance.

1. Except as provided under subparagraph (g)2. of this paragraph, affected facilities shall be in compliance with this paragraph within twelve (12) months of adoption.

2. Nothing in this rule shall prevent the owner or operator of an affected facility from submitting to the Director a proposed alternative compliance schedule provided:

(i) the proposed alternative schedule is submitted within two (2) months of adoption; and

(ii) the proposed alternative schedule contains increments of progress; and

(iii) sufficient documentation and certification from appropriate suppliers, contractors, manufacturers, or fabricators are submitted by the owner or operator of the affected source to justify the dates proposed for the increments of progress; and

(iv) all alternative compliance schedules proposed or promulgated under this rule shall provide for compliance of the source with this rule as expeditiously as practicable, but no later than December 31, 1987.

Author: Ronald W. Gore.
Statutory Authority: Code of Alabama 1975, §§22-28-14, 22-22A-5, 22-22A-6, and 22-22A-8.
History: Effective Date: March 23, 1982.
Amended: March 1, 1985; November 21, 1996.

335-3-4-.16 Reserved.

335-3-4-.17 Steel Mills Located in Etowah County.

(1) Visible Emissions from the roof monitor or other openings in the BOF shop building, other than water mist or vapor, shall not exceed a shade or density greater than twenty percent (20%) opacity as determined on a three (3) minute rolling average. Compliance shall be determined by using the procedures specified at 40 CFR, Part 60, Appendix A, Method 9, excluding Section 2.5.

(2) All paved roads shall be vacuum swept or flushed of surface material every third consecutive day. The vacuum sweeper shall have a minimum blower capacity of 12,000 cfm and the flushing machine shall dispense water at

the rate of 0.32 gal/yd^2.

(3) Paved parking areas shall be vacuum swept or flushed of surface material every calendar quarter. The vacuum sweeper shall have a minimum blower capacity of 12,000 cfm and the flushing machine shall dispense water at the rate of 0.32 gal/yd^2.

(4) Paved road or area flushing specified in paragraphs (2) and (3) of this rule is not required when the temperature is below 32°F. Paved road or area cleaning is not required when precipitation during the previous 24-hour period has exceeded 0.01 inches.

(5) Unpaved roads, traffic areas in the slab storage area, and traffic areas in other material storage areas shall be treated with petroleum resin, asphalt emulsion, or equivalent dust suppressant on a quarterly or more frequent basis as determined by the Director.

(6) Unpaved parking lots shall be treated with petroleum resin, asphalt emulsion, or equivalent dust suppressant on a semi-annual basis.

(7) The petroleum resin or asphalt emulsion dust suppressant required in paragraphs (5) and (6) of this rule shall be applied at a dilution ratio of 20% for the initial 3 applications and 12% for subsequent applications. The suppressant shall be applied at the rate of 0.75 gal/yd^2 of diluted solution for the initial 3 applications. Subsequent applications shall be applied at 0.25 gal/yd^2 of diluted solution. Other dust suppressants must be applied at an equivalent dilution ratio and application rate as determined by the Director.

(8) The source shall maintain at its plant premises, and make available for inspection, records documenting each occasion on which paved areas are cleaned in accordance with paragraphs (2) and (3) of this rule, and any occasion on which such paved areas are not cleaned according to the required schedule, including any justification for failure to meet the required schedule, such as equipment breakdown or inclement weather conditions. The company shall also maintain and make available for inspection records documenting the frequency and amount of applications required by paragraphs (5) and (6) of this rule. Said records shall be maintained for a minimum of two years following the date of recorded information.

(9) The source shall, within 30 days of approval of this rule, notify the Department of a designated reclaim area on plant property and a designated paved road at its premises to be used to transport molten slag from the basic oxygen furnace shop to the reclaim area. These designations shall not be changed without the written approval of the Director.

Author: Sue R. Robertson.
Statutory Authority: Code of Alabama 1975, §§22-28-14, 22-22A-5, 22-22A-6, and 22-22A-8.
History: Effective Date: March 23, 1982.
Amended: September 18, 1985; November 21, 1996.

ALABAMA DEPARTMENT OF ENVIRONMENTAL MANAGEMENT AIR DIVISION - AIR POLLUTION CONTROL PROGRAM

CHAPTER 335-3-5
CONTROL OF SULFUR COMPOUND EMISSIONS

TABLE OF CONTENTS

335-3-5-.01 Fuel Combustion
335-3-5-.02 Sulfuric Acid Plants
335-3-5-.03 Petroleum Production
335-3-5-.04 Kraft Pulp Mills
335-3-5-.05 Process Industries - General
335-3-5-.06 TR SO_2 Trading Program – Purpose and Definitions
335-3-5-.07 TR SO_2 Trading Program - Applicability
335-3-5-.08 TR SO_2 Trading Program – Retired Unit Exemption
335-3-5-.09 TR SO_2 Trading Program – Standard Requirements
335-3-5-.10 TR SO_2 Trading Program – Computation of Time
335-3-5-.11 Administrative Appeal Procedures
335-3-5-.12 SO_2 Trading Budgets and Variability Limits
335-3-5-.13 TR SO_2 Allowance Allocations
335-3-5-.14 Authorization of Designated Representative and Alternate Designated Representative
335-3-5-.15 Responsibilities of Designated Representative and Alternate Designated Representative
335-3-5-.16 Changing Designated Representative and Alternate Designated Representative; Changes in Owners and Operators; Changes in Units at the Source
335-3-5-.17 Certificate of Representation
335-3-5-.18 Objections Concerning Designated Representative and Alternate Designated Representative
335-3-5-.19 Delegation by Designated Representative and Alternate Designated Representative
335-3-5-.20 Reserved
335-3-5-.21 Establishment of Compliance Accounts, Assurance Accounts, and General Accounts
335-3-5-.22 Recordation of TR SO_2 Allowance Allocations and Auction Results
335-3-5-.23 Submission of TR SO_2 Allowance Transfers
335-3-5-.24 Recordation of TR SO_2 Allowance Transfers
335-3-5-.25 Compliance with TR SO_2 Emissions Limitation
335-3-5-.26 Compliance with TR SO_2 Assurance Provisions
335-3-5-.27 Banking
335-3-5-.28 Account Error
335-3-5-.29 Administrator's Action on Submissions
335-3-5-.30 Reserved
335-3-5-.31 General Monitoring, Recordkeeping, and Reporting Requirements

335-3-5-.32 Initial Monitoring System Certification and Recertification Procedures
335-3-5-.33 Monitoring System Out-of-Control Periods
335-3-5-.34 Notifications Concerning Monitoring
335-3-5-.35 Recordkeeping and Reporting
335-3-5-.36 Petitions for Alternatives to Monitoring, Recordkeeping, or Reporting Requirements

335-3-5-.01 Fuel Combustion.

(1) Emission Limitations.

(a) Sulfur Dioxide Category I Counties. No person shall cause or permit the operation of a fuel burning installation in a Sulfur Dioxide Category I County or in Jefferson County in such a manner that sulfur oxides, measured as sulfur dioxide, are emitted in excess of 1.8 pounds per million BTU heat input.

(b) Sulfur Dioxide Category II Counties. No person shall cause or permit the operation of a fuel burning installation in a Sulfur Dioxide Category II County in such a manner that sulfur oxides, measured as sulfur dioxide, are emitted in excess of 4.0 pounds per million BTU heat input.

(c) Sulfur Dioxide - Jackson County. No person shall cause or permit the operation of an electric utility steam generating installation having a total rated capacity greater than 5,000 million BTU per hour in Jackson County in such a manner that sulfur oxides, measured as sulfur dioxide, are emitted in excess of 1.2 pounds per million BTU heat input.

(d) Sulfur Dioxide - Colbert County. No person shall cause or permit the operation of electric utility steam generating units with rated capacities greater than 1,000 million BTU per hour which commenced operation prior to 1960 in Colbert County in such a manner that sulfur oxides, measured as sulfur dioxide, are emitted in excess of 2.2 pounds per million BTU heat input.

1. Compliance with this paragraph shall be achieved no later than the dates in the following schedule:

(i) Specifications for emission control equipment shall be completed by October 1, 1987.

(ii) Initiation of on-site construction shall begin by April 1, 1988.

(iii) Contracts for emission control equipment shall be awarded by May 1, 1988.

(iv) Contracts for compliance coal shall be awarded by February 1, 1990.

(v) The first electric utility steam generating unit shall be in compliance with this paragraph by May 1, 1990.

(vi) The second electric utility steam generating unit shall be in compliance with this paragraph by August 1, 1990.

(vii) The third electric utility steam generating unit shall be in compliance with this paragraph by November 1, 1990.

(viii) The fourth electric utility steam generating unit shall be in compliance with this paragraph by January 1, 1991.

(e) Sulfur Dioxide - Shelby County. No person shall cause or permit the operation of an electric utility steam generating installation having a total rated capacity greater than 5,000 million BTU per hour in Shelby County in such a manner that sulfur oxides, measured as sulfur dioxide, are emitted in excess of 3.8 pounds per million BTU heat input.

(2) Air Quality Demonstration. In addition to the requirements of paragraph (1) of this rule, every owner or operator of a fuel burning installation having a total rated capacity greater than 1500 million BTU per hour shall:

(a) Demonstrate, to the satisfaction of the Director, that the sulfur oxides emitted, either alone or in contribution to other sources, will not interfere with attainment and maintenance of any primary or secondary ambient air quality standard prescribed at rule 335-3-1-.03.

(b) Demonstrate, to the satisfaction of the Director, that in meeting the emission limitations of paragraph (1) of this rule, the installation will not increase emissions to the extent that resulting air quality concentrations will be greater than:

1. Those concentrations (either measured or calculated) which existed in 1970; or those concentrations (either measured or calculated) which existed during the first year of operation of any installation which began operating after January 1, 1970.

(c) Upon the direction of the Director, install and maintain air quality sensors to monitor attainment and maintenance of ambient air quality standards in the areas influenced by the emissions from such installation. Results of such monitoring shall be provided to the Director in a manner and form as he shall direct.

(3) For purposes of this rule, the total heat input from all similar fuel combustion units at a plant, premises, or installation shall be used for determining the maximum allowable emission of sulfur dioxide that passes through a stack or stacks. Units constructed and operated to conform with the new Source Performance Standards shall not be considered similar to other units at a plant, premises, or installation.

(4) All calculations performed pursuant to demonstrations required by paragraph (2) of this rule shall assume that the fuel burning installation is operating at or above the maximum capacity which such installation is capable of

being operated.

(5) No person shall cause or permit the emission or combustion of any refinery process gas stream that contains H_2S in concentrations greater than 150 ppm without removal of the hydrogen sulfide in excess of this concentration.

(6) To ensure that ambient air quality standards are met, an annual review of Sulfur Dioxide Category I and II Counties will be made by the Air Division staff. Initial Sulfur Dioxide Category classifications and any subsequent changes to Sulfur Dioxide Category classifications will be the subject of a public hearing.

Author: James W. Cooper and John E. Daniel.
Statutory Authority: Code of Alabama 1975, §§22-28-14, 22-22A-5, 22-22A-6, and 22-22A-8.
History: Effective Date: January 18, 1972.
Amended: May 29, 1973; March 25, 1975; August 28, 1979; August 10, 1987; November 21, 1996.

355-3-5-.02 Sulfuric Acid Plants.

(1) Applicability.

(a) For existing sulfuric acid plants operating as of January 18, 1972, the following applies:

1. No person shall cause or permit sulfur dioxide tail gas emissions from sulfuric acid manufacturing plants to exceed 27 pounds per ton of 100 percent sulfuric acid produced; provided, however, that no sulfuric acid manufacturing plant emitting less than 27 pounds per ton of 100 percent sulfuric acid produced shall be allowed to increase its emission rate.

2. No person shall cause or permit tail gas acid mist emissions to exceed 0.5 pounds per ton of sulfuric acid produced, and the sulfur trioxide emissions are not to exceed 0.2 pounds per ton of sulfuric acid produced.

(b) For all sulfuric acid plants not included in subparagraph (a) above, the following applies:

1. No person shall cause or permit the discharge into the atmosphere of sulfur dioxide in excess of 4 pounds per ton of sulfuric acid produced, maximum two-hour average.

2. No person shall cause or permit the discharge into the atmosphere of acid mist which is in excess of 0.15 pounds per ton of acid produced, maximum two-hour average, expressed as H_2SO_4.

(2) There shall be installed, calibrated, maintained, and operated in any sulfuric acid production unit subject to the provisions of this rule, an

instrument for continuously monitoring and recording emissions of sulfur dioxide.

(3) Any instrument and sampling system installed and used pursuant to this rule shall be subject to the approval of the Director.

Author: James W. Cooper and John E. Daniel.
Statutory Authority: Code of Alabama 1975, §§22-28-14, 22-22A-5, 22-22A-6, and 22-22A-8.
History: Effective Date: January 18, 1972.
Amended: May 29, 1973; April 22, 1975; November 21, 1996.

335-3-5-.03 Petroleum Production.

(1) Applicability. This regulation applies to facilities that handle natural gas or refinery gas that contains more than 0.10 grain of hydrogen sulfide per standard cubic foot (SCF).

(2) No person shall cause or permit the emission of a process gas stream containing more than 0.10 grain of hydrogen sulfide per SCF into the atmosphere unless it is properly burned to maintain the ground level concentrations of hydrogen sulfide to less than twenty (20) parts per billion beyond plant property limits, averaged over a thirty (30) minute period.

(3) No person shall cause or permit the sulfur oxide emission from any facility designed to dispose of or process natural gas or refinery gas containing more than 0.10 grain of hydrogen sulfide per standard cubic foot to exceed the following:

Category I Counties

Available Sulfur (Long Tons/Day)	Permitted Emissions of Sulfur Dioxide
Up to 5	No Limit
5 to 35	373 lbs/hour
35 to 75	0.10 lbs. SO_2/lb. S processed
Over 75	0.08 lbs. SO_2/lb. S processed

Category II Counties

Available Sulfur (Long Tons/Day)	Permitted Emissions of Sulfur Dioxide
Up to 10	No Limit
10 to 50	560 lbs/hour
50 to 100	0.10 lbs. SO_2/lb. S processed
Over 100	0.08 lbs. SO_2/lb. S processed

(a) The allowable emissions of sulfur dioxide are increased as follows to allow for dry acid gas streams containing less than 60 percent hydrogen sulfide:

Mole Percent of Hydrogen Sulfide In Dry Acid Gas	Additional SO_2 Emissions Allowed
50% but less than 60%	0.02 lbs. SO_2/lb. S processed
40% but less than 50%	0.04 lbs. SO_2/lb. S processed
30% but less than 40%	0.06 lbs. SO_2/lb. S processed
20% but less than 30%	0.10 lbs. SO_2/lb. S processed
Less than 20%	Must utilize the best available control technology, with consideration to the technical practicability and economic reasonableness of reducing or eliminating the emissions from the facility.

(4) Applicability. In addition to the requirements of paragraph (3) of this rule, the provisions of this paragraph apply to all natural gas processing facilities in Escambia County with capacities greater than 50 million standard cubic feet of sour gas per day.

(a) No person shall cause or permit the emissions of total sulfur compounds, measured as sulfur dioxide, from any affected facility to exceed the following:

Available Sulfur (Long Tons/Day)	Permitted Emissions Of Total Sulfur Compounds
Up to 575	0.140 pounds of total sulfur compounds per pound of available sulfur
575 to 1031	Pounds of total sulfur compounds per pound of available sulfur = $0.186 - 8.57 \times 10^{-7} S$ Where **S** = lb/hr of available sulfur
Over 1031	10,008 lb/hr

(b) Compliance with subparagraph (a) of this paragraph shall be determined continuously by monitors which measure the total sulfur compounds, measured as sulfur dioxide, emitted by the facility and total available sulfur to the facility or by other equivalent methods approved by the Director.

(5) For purposes of this rule, the following counties are classified as Category I Counties: **Jackson**, **Jefferson**, and **Mobile**. The remaining counties in the state are classified as Category II Counties.

(6) Compliance with this rule shall be determined by both material balances and stack sampling. New plants are required either to install monitors to continuously determine the sulfur oxide emissions in terms of mass per unit of time or to determine the sulfur oxide emissions by other means approved by the Director.

(7) In calculating the ground level concentration that results from short-term waste gas or emergency flaring, it shall be assumed that only seventy-five percent (75%) of the heat of combustion is used to heat the products of combustion.

(8) Air Quality Demonstration. In addition to the requirements of paragraph (3) of this rule, every owner or operator of a facility covered by rule 335-3-5-.03 shall demonstrate, to the satisfaction of the Director, that the sulfur oxides emitted, either along or in conjunction with other sources, will not interfere with attainment and maintenance of any primary or secondary ambient air quality standard.

(9) To ensure that ambient air quality standards are met, an annual review of Sulfur Dioxide Category I and II Counties will be made by the staff. Initial Sulfur Dioxide Category Classifications and any subsequent changes to Sulfur Dioxide Category Classifications will be the subject of a public hearing.

Author: James W. Cooper and John E. Daniel.
Statutory Authority: Code of Alabama 1975, §§22-28-14, 22-22A-5, 22-22A-6, and 22-22A-8.
History: Effective Date: January 18, 1972.
Amended: May 29, 1973; May 25, 1976; August 10, 1987; November 21, 1996; September 7, 2000.

335-3-5-.04 Kraft Pulp Mills.

(1) For the purposes of this rule, the following definitions apply:

(a) "Old Design Recovery Furnaces" shall mean recovery furnaces designed to burn black liquor after direct contact evaporation, as well as units built prior to 1970, converted to an indirect contact unit prior to 1990 and whose exhaust gases pass through a wet bottom electrostatic precipitator.

(b) "New Design Recovery Furnaces" shall mean recovery furnaces designed to burn black liquor after indirect contact evaporation.

(2) Applicability. This rule applies to manufacturing facilities for the pulping of wood and the preparation and recovery of associated chemicals by the kraft process, including combined recovery systems serving other processes such as neutral sulfite pulping.

(3) Except as provided in paragraphs (11) and (13), no owner/operator shall cause or permit an old design recovery furnace to emit more than 20 parts per million total reduced sulfur corrected to eight percent oxygen on a daily basis 12 hour average for the two consecutive periods of each operating day measured by the continuous emission monitor.

(4) Except as provided in paragraphs (11) and (13), no owner/operator shall cause or permit a new design recovery furnace to emit more than 5 parts

per million total reduced sulfur corrected to eight percent oxygen on a daily basis 12 hour average for the two consecutive periods of each operating day measured by the continuous emission monitor.

(5) Except as provided in paragraphs (11) and (13), no owner/operator shall cause or permit a digester system or an evaporator system to emit more than 5 parts per million total reduced sulfur corrected to ten percent oxygen on a daily basis 12 hour average for the two consecutive periods of each operating day measured by the continuous emission monitor, unless the gases are incinerated in a unit at a minimum temperature of 1200°F for at least 0.5 seconds.

(6) Except as provided in paragraphs (11) and (13), no owner/operator shall cause or permit any lime kiln to emit more than 20 parts per million total reduced sulfur corrected to ten percent oxygen on a daily basis 12 hour average for the two consecutive periods of each operating day measured by the continuous emission monitor.

(7) Except as provided in paragraphs (11) and (13), no owner/operator shall cause or permit a smelt tank to emit more than 0.033 pounds of total reduced sulfur per ton of black liquor solids fired in the recovery furnace measured in accordance with the 40 CFR (7-1-90 Edition) Part 60, Appendix A, Method 16, 16A, or 16B as approved by the Director.

(8) Except as provided in paragraph (11), within eighteen months of this regulation's promulgation, for each affected recovery furnace, lime kiln, digester system and evaporator system the owner/operator shall have a continuous total reduced sulfur emission monitoring system installed, calibrated, maintained and operated in accordance with 40 CFR § 60.284, except that monitor spans will be approved by the Director. Notwithstanding the foregoing provisions of this paragraph, when emissions from two or more sources are combined before release to the atmosphere, the owner/operator may install a single continuous emission monitoring system to measure the combined emissions. Digester and evaporator system emissions that are incinerated in units other than recovery furnaces or lime kilns at a minimum temperature of 1200°F for at least 0.5 seconds shall not require a continuous emission monitoring system for the measurement of total reduced sulfur.

(9) For each monitored unit, a quarterly report shall be submitted to the Department of all valid twelve hour averages determined as the arithmetic mean of the appropriate and valid 12 contiguous 1 hour average total reduced sulfur concentrations greater than the respective limits.

(10) For the purpose of quarterly reports required in paragraph (9), the following are applicable:

(a) All data averages must be calculated using valid data.

(b) Valid data is defined as each hourly and twelve hour average where the monitor provides calibrated emission data for a minimum of seventy-five

percent of the unit operating time (i.e., the time a recovery furnace is firing liquor or a lime kiln is feeding lime mud).

(c) A continuous emission monitoring system installed per paragraph (8) is not calibrated (Monitor inoperable) when:

1. The continuous emission monitoring system breaks down, undergoes repairs, undergoes zero and span adjustments, or undergoes more than the required zero and span calibration drift check.

2. The fifth consecutive daily calibration drift check occurs that indicates either the zero or span calibration drift exceeded ten percent of span for total reduced sulfur or one percent for oxygen.

3. Or at the end of the daily calibration drift check preceding any daily calibration drift check that indicates the zero or span calibration drift exceeded twenty percent of span for total reduced sulfur or two percent for oxygen.

(d) Any continuous emission monitoring system found to be uncalibrated (Monitor inoperable) per subparagraph (c) of this paragraph is again calibrated when the calibration drift check after corrective action indicates both the zero and span calibration drift did not exceed ten percent of span for total reduced sulfur and one percent for oxygen.

(e) Twelve-hour periods which cannot be calculated using a minimum of seventy-five (75) percent valid data (e.g. data collected during either monitor inoperability or unit operating less than 75% of the twelve-hour period) shall be reported with an explanation of the cause of the valid data being unavailable.

(f) Data generated by required continuous emission monitoring systems which are shown to the satisfaction of the Director to be inaccurate due to unavoidable monitoring system problems shall not be considered valid.

(11) Within six months of this regulation's promulgation, the owner/operator of each affected unit shall notify the Department in writing of the compliance status of each affected unit. This notification shall state which of the following categories each unit falls into:

(a) The unit is in compliance, or;

(b) The unit is not capable of achieving compliance within six months of this regulation's promulgation. The owner/operator shall submit by that date a description of the techniques to be used to achieve compliance and a schedule (including increments of progress) that provide a final compliance date. The Director shall approve plans that he determines to be expeditious. In no case shall a plan to meet these limits specify a time period to exceed five years from this regulation's promulgation. The total reduced sulfur continuous emission monitoring system as described in paragraph (8) shall be installed and operational on the date measures designed to effect compliance are complete, or;

(c) The unit is scheduled to be permanently shut down. The owner/operator shall submit by that date a plan to shut the unit down. The Director shall approve plans that he determines to be expeditious. In no case shall a shutdown schedule exceed five years from this regulation's promulgation. A total reduced sulfur continuous emission monitoring system is not required; or

(12) The unit's compliance status is uncertain, and a determination of that status cannot be made until the monitoring system required in paragraph (8) is in operation. Within twenty-seven months of this regulation's promulgation, the owner/operator shall either confirm that the unit is in compliance or submit a description of the techniques to be used to achieve compliance and a schedule (including increments of progress) that provide a final compliance date. The Director shall approve plans that he determines to be expeditious. In no case shall a plan to meet these limits specify a time period to exceed five years from this regulation's promulgation.

(13) Each applicable emission unit shall remain subject to the following regulations until compliance with paragraphs (1) through (11) is achieved:

(a) No person shall cause or permit the emissions of total reduced sulfur (TRS) from recovery furnaces, lime kilns, digesters, and multiple effect evaporators to exceed 1.2 pounds (expressed as hydrogen sulfide on a dry gas basis) per ton of air-dried pulp from kraft pulp mills.

(b) The pulp production rates for kraft pulp mills referred to in this rule shall be calculated as provided in rule 335-3-4-.07(3).

(c) Notwithstanding the specific limits set forth in this rule, in order to maintain the lowest possible emission of air contaminants, the highest and best practicable treatment and control for TRS currently available shall be provided for new kraft pulp mills.

(14) If an owner or operator demonstrates to the satisfaction of the Director that emissions in excess of the levels otherwise authorized in this regulation occur as a result of properly performed startups, shutdowns or unavoidable malfunctions these emissions will not constitute a violation.

Author: James W. Cooper and John E. Daniel.
Statutory Authority: Code of Alabama 1975, §§22-28-14, 22-22A-5, 22-22A-6, and 22-22A-8.
History: Effective Date: July 26, 1972.
Amended: May 29, 1973; October 30, 1992; November 21, 1996.

335-3-5-.05 Process Industries - General.

(1) Applicability. This rule applies to facilities not regulated by rules 335-3-5-.01 through 335-3-5-.04.

(2) No person shall construct and operate a new or modified sulfur compound emission source that does not meet any and all applicable New Source Performance Standards and utilizes the best available control technology, with consideration to the technical practicability and economic reasonableness of reducing or eliminating the emissions from the facility.

(3) No person shall construct and operate a new or modified emission source that will cause or contribute to a condition such that either the primary or the secondary sulfur dioxide ambient air quality standards are exceeded in the area.

Author: James W. Cooper and John E. Daniel.
Statutory Authority: Code of Alabama 1975, §§22-28-14, 22-22A-5, 22-22A-6, and 22-22A-8.
History: Effective Date: May 25, 1976.
Amended: August 10, 1976.

335-3-5-.06 TR SO_2 Trading Program – Purpose and Definitions.

(1) Purpose. Rules 335-3-5-.06 through 335-3-5-.36 set forth the general, designated representative, allowance, and monitoring provisions for the Transport Rule (TR) SO_2 Group 2 Trading Program, under section 110 of the Clean Air Act, as a means of mitigating interstate transport of fine particulates and sulfur dioxide.

(2) Definitions. For the purpose of rules 335-3-5-.06 through 335-3-5-.36, the definitions listed in 40 CFR §97.702, Subpart DDDDD as of July 1, 2015, will apply.

(a) "Department" means the Alabama Department of Environmental Management.

(b) Word, Phrase, and Rule Substitutions. For the purpose of rule 335- 3-5-.06 substitute:

1. Adem Administrative Code r. 335-3-5-.07 for 40 CFR §97.704.

2. Adem Administrative Code r. 335-3-5-.07(1)(b)2.(ii) and (iii) for §§97.704(b)(2)(i)(B) and (ii).

3. Adem Administrative Code r. 335-3-5-.08 for 40 CFR §97.705.

4. Adem Administrative Code r. 335-3-5-.12(1) for 40 CFR §97.710(a).

5. Adem Administrative Code r. 335-3-5-.12(2) for 40 CFR §97.710(b).

6. Adem Administrative Code r. 335-3-5-.13 for 40 CFR §97.711.

7. Adem Administrative Code r. 335-3-5-.13 for 40 CFR §97.712.

(3) Measurements, Abbreviations, and Acronyms. Measurements, abbreviations, and acronyms used in this rule and in rules 335-3-5-.06 through 335-3-5-.36 are defined as follows:

(a) Btu - British thermal unit

(b) CO_2 – carbon dioxide

(c) H_2O – water

(d) hr – hour

(e) kW – kilowatt electrical

(f) kWh – kilowatt hour

(g) lb – pound

(h) mmBtu – million Btu

(i) MWe – megawatt electrical

(j) MWh – megawatt hour

(k) NO_x – nitrogen oxides

(l) O_2 – oxygen

(m) ppm – parts per million

(n) scfh – standard cubic feet per hour

(o) SO_2 – sulfur dioxide

(p) yr – year

Author: Ronald W. Gore.
Statutory Authority: Code of Alabama 1975, §§22-28-10, 22-28-11, 22-28-14, 22-28-18, 22-28-20, 22-28-22, 22-22A-5, 22-22A-6, and 22-22A-8.
History: Effective Date: November 24, 2015.

335-3-5-.07 TR SO_2 Trading Program - Applicability.

(1) Applicability.

(a) Except as provided in subparagraph (b) of this paragraph:

1. The following units in the State of Alabama shall be TR SO_2 Group 2 units, and any source that includes one or more such units shall be a TR SO_2 Group 2 source, subject to the requirements of rules 335-3-5-.06 through 335- 3-

5-.36: any stationary, fossil-fuel-fired boiler or stationary, fossil-fuel-fired combustion turbine serving at any time, on or after January 1, 2005, a generator with nameplate capacity of more than 25 MWe producing electricity for sale.

2. If a stationary boiler or stationary combustion turbine that, under subparagraph (a)1. of this paragraph, is not a TR SO_2 Group 2 unit begins to combust fossil fuel or to serve a generator with nameplate capacity of more than 25 MWe producing electricity for sale, the unit shall become a TR SO_2 Group 2 unit as provided in subparagraph (a)1. of this paragraph on the first date on which it both combusts fossil fuel and serves such generator.

(b) Any unit in the State that otherwise is a TR SO_2 Group 2 unit under subparagraph (a) of this paragraph and that meets the requirements set forth in subparagraphs (b)1.(i) and (ii) or 2.(i) and (ii) of this paragraph shall not be a TR SO_2 Group 2 unit:

1. Any unit:

(i) Qualifying as a cogeneration unit throughout the later of 2005 or the 12-month period starting on the date the unit first produces electricity and continuing to qualify as a cogeneration unit throughout each calendar year ending after the later of 2005 or such 12-month period; and

(ii) Not supplying in 2005 or any calendar year thereafter more than one-third of the unit's potential electric output capacity or 219,000 MWh, whichever is greater, to any utility power distribution system for sale.

(iii) If, after qualifying under subparagraphs (b)1.(i) and (ii) of this paragraph as not being a TR SO_2 Group 2 unit, a unit subsequently no longer meets all the requirements of subparagraphs (b)1.(i) and (ii) of this paragraph, the unit shall become a TR SO_2 Group 2 unit starting on the earlier of January 1 after the first calendar year during which the unit first no longer qualifies as a cogeneration unit or January 1 after the first calendar year during which the unit no longer meets the requirements of subparagraph (b)1.(ii) of this paragraph. The unit shall thereafter continue to be a TR SO_2 Group 2 unit.

2. Any unit:

(i) Qualifying as a solid waste incineration unit throughout the later of 2005 or the 12-month period starting on the date the unit first produces electricity and continuing to qualify as a solid waste incineration unit throughout each calendar year ending after the later of 2005 or such 12-month period; and

(ii) With an average annual fuel consumption of fossil fuel for the first 3 consecutive calendar years of operation starting no earlier than 2005 of less than 20 percent (on a Btu basis) and an average annual fuel consumption of fossil fuel for any 3 consecutive calendar years thereafter of less than 20 percent (on a Btu basis).

(iii) If, after qualifying under subparagraphs (b)2.(i) and (ii) of this paragraph as not being a TR SO_2 Group 2 unit, a unit subsequently no longer meets all the requirements of subparagraphs (b)2.(i) and (ii) of this paragraph, the unit shall become a TR SO_2 Group 2 unit starting on the earlier of January 1 after the first calendar year during which the unit first no longer qualifies as a solid waste incineration unit or January 1 after the first 3 consecutive calendar years after 2005 for which the unit has an average annual fuel consumption of fossil fuel of 20 percent or more. The unit shall thereafter continue to be a TR SO_2 Group 2 unit.

(c) A certifying official of an owner or operator of any unit or other equipment may submit a petition (including any supporting documents) to the Administrator at any time for a determination concerning the applicability, under subparagraphs (a) and (b) of this paragraph of the TR SO_2 Group 2 Trading Program to the unit or other equipment. The certifying official of an owner or operator of any unit or other equipment shall submit a copy of the petition (including any supporting documents) to the Department.

1. Petition content. The petition shall be in writing and include the identification of the unit or other equipment and the relevant facts about the unit or other equipment. The petition and any other documents provided to the Administrator in connection with the petition shall include the following certification statement, signed by the certifying official: "I am authorized to make this submission on behalf of the owners and operators of the unit or other equipment for which the submission is made. I certify under penalty of law that I have personally examined, and am familiar with, the statements and information submitted in this document and all its attachments. Based on my inquiry of those individuals with primary responsibility for obtaining the information, I certify that the statements and information are to the best of my knowledge and belief true, accurate, and complete. I am aware that there are significant penalties for submitting false statements and information or omitting required statements and information, including the possibility of fine or imprisonment."

2. Response. The Administrator will issue a written response to the petition and may request supplemental information determined by the Administrator to be relevant to such petition. The Administrator's determination concerning the applicability, under paragraphs (a) and (b) of this paragraph, of the TR SO_2 Group 2 Trading Program to the unit or other equipment shall be binding on Alabama, the Department, and any other State or permitting authority, unless the Administrator determines that the petition contained significant, relevant errors or omissions.

Author: Ronald W. Gore.
Statutory Authority: Code of Alabama 1975, §§22-28-10, 22-28-11, 22-28-14, 22-28-18, 22-28-20, 22-28-22, 22-22A-5, 22-22A-6, and 22-22A-8.
History: Effective Date: November 24, 2015.

335-3-5-.08 TR SO_2 Trading Program – Retired Unit Exemption.

(1) Any TR SO_2 Group 2 unit that is permanently retired shall be exempt from 40 CFR §§97.706(b) and (c)(1), rule 335-3-5-.25, and rules 335-3-5-.31 through 335-3-5-.36.

(a) The exemption under paragraph (1) of this rule shall become effective the day on which the TR SO_2 Group 2 unit is permanently retired. Within 30 days of the unit's permanent retirement, the designated representative shall submit a statement to the Administrator. The statement shall state, in a format prescribed by the Administrator, that the unit was permanently retired on a specified date and will comply with the requirements of paragraph (2) of this rule. The designated representative shall submit a copy of the statement to the Department.

(2) Special provisions.

(a) A unit exempt under paragraph (1) of this rule shall not emit any SO_2, starting on the date that the exemption takes effect.

(b) For a period of 5 years from the date the records are created, the owners and operators of a unit exempt under paragraph (1) of this rule shall retain, at the source that includes the unit, records demonstrating that the unit is permanently retired. The 5-year period for keeping records may be extended for cause, at any time before the end of the period, in writing by the Administrator. The owners and operators bear the burden of proof that the unit is permanently retired.

(c) The owners and operators and, to the extent applicable, the designated representative of a unit exempt under paragraph (1) of this rule shall comply with the requirements of the TR SO_2 Group 2 Trading Program concerning all periods for which the exemption is not in effect, even if such requirements arise, or must be complied with, after the exemption takes effect.

(d) A unit exempt under paragraph (1) of this rule shall lose its exemption on the first date on which the unit resumes operation. Such unit shall be treated, for purposes of applying allocation, monitoring, reporting, and recordkeeping requirements under TR SO_2 Group 2 Trading Program, as a unit that commences commercial operation on the first date on which the unit resumes operation.

Author: Ronald W. Gore.
Statutory Authority: Code of Alabama 1975, §§22-28-10, 22-28-11, 22-28-14, 22-28-18, 22-28-20, 22-28-22, 22-22A-5, 22-22A-6, and 22-22A-8.
History: Effective Date: November 24, 2015.

335-3-5-.09 TR SO_2 Trading Program – Standard Requirements.

(1) General. The Environmental Protection Agency's Standard Requirements for TR SO2 Sources, are incorporated by reference as they exist in 40 CFR §97.706, Subpart DDDDD as of July 1, 2015. (The materials

incorporated by reference are available for purchase and inspection at the Department's offices.)

(2) Word, Phrase, and Rule Substitutions. For the purpose of rule 335-3-5-.09 substitute:

(a) Adem Administrative Code r. 335-3-16-.13(3) for 40 CFR §70.7(e)(2).

(b) Adem Administrative Code r. 335-3-16-.13(3)(a)2. For 40 CFR §70.7(e)(2)(i)(B).

(c) Adem Administrative Code r. 335-3-5-.13 for 40 CFR §§97.711(a)(2) and (b).

(d) Adem Administrative Code r. 335-3-5-.13 for 40 CFR §97.712.

(e) Adem Administrative Code r. 335-3-5-.08 for 40 CFR §97.705.

(f) Adem Administrative Code r. 335-3-5-.12(1) for 40 CFR §97.710(a).

(g) Adem Administrative Code r. 335-3-5-.12(2) for 40 CFR §97.710(b).

Author: Ronald W. Gore.
Statutory Authority: Code of Alabama 1975, §§22-28-10, 22-28-11, 22-28-14, 22-28-18, 22-28-20, 22-28-22, 22-22A-5, 22-22A-6, and 22-22A-8.
History: Effective Date: November 24, 2015.

335-3-5-.10 TR SO_2 Trading Program – Computation of Time.

(1) General. The Environmental Protection Agency Regulations governing the Computation of Time under the TR SO_2 Sources, are incorporated by reference as they exist in 40 CFR §97.707, Subpart DDDDD as of July 1, 2015. (The materials incorporated by reference are available for purchase and inspection at the Department's offices.)

Author: Ronald W. Gore.
Statutory Authority: Code of Alabama 1975, §§22-28-10, 22-28-11, 22-28- 14, 22-28-18, 22-28-20, 22-28-22, 22-22A-5, 22-22A-6, and 22-22A-8.
History: Effective Date: November 24, 2015.

335-3-5-.11 Administrative Appeal Procedures.

(1) The appeal procedures for decisions of the Administrator under rules 335-3-5-.06 through 335-3-5-.36 are set forth in 40 CFR 78.

Author: Ronald W. Gore.
Statutory Authority: Code of Alabama 1975, §§22-28-10, 22-28-11, 22-28-14, 22-28-18, 22-28-20, 22-28-22, 22-22A-5, 22-22A-6, and 22-22A-8.
History: Effective Date: November 24, 2015.

335-3-5-.12 SO_2 Trading Budgets and Variability Limits. [NEW RULE]

(1) The State SO_2 trading budgets for allocations of TR SO_2 Group 2 allowances for the control periods in 2017 and thereafter is 213,258 tons.

(2) The State SO_2 variability limit for the State SO_2 Group 2 trading budgets for the control periods in 2017 and thereafter is 38,386 tons.

Author: Ronald W. Gore.
Statutory Authority: Code of Alabama 1975, §§22-28-10, 22-28-11, 22-28-14, 22-28-18, 22-28-20, 22-28-22, 22-22A-5, 22-22A-6, and 22-22A-8.
History: Effective Date: November 24, 2015.

335-3-5-.13 TR SO_2 Allowance Allocations.

(1) State SO_2 Group 2 Trading Program Budget. The State trading budget for annual allocations of Transport Rule (TR) SO_2 Group 2 allowances for the control periods 2017 and thereafter is 213,258 tons.

(2) Timing Requirements for SO_2 Group 2 Allowance Allocations.

(a) By June 1, 2016, the Department will submit to the Administrator, in a format prescribed by the Administrator, the SO_2 Group 2 allowance allocations, in accordance with paragraph (3) of this rule, for the control periods in 2017 and 2018.

(b) By June 1, 2017, the Department will submit to the Administrator, in a format prescribed by the Administrator, the SO_2 Group 2 allowance allocations, in accordance with paragraph (3) of this rule, for the control periods in 2019 and 2020.

(c) By June 1, 2018, the Department will submit to the Administrator, in a format prescribed by the Administrator, the SO_2 Group 2 allowance allocations, in accordance with paragraph (3) of this rule, for the control periods in 2021 and 2022.

(d) By June 1, 2019, and every other year thereafter, the Department shall submit to the Administrator, in a format prescribed by the Administrator, the SO_2 Group 2 allocations, in accordance with paragraph (3) of this rule, for the control periods in the two years that are four and five years after the year of the applicable deadline for submission under this paragraph.

(3) SO_2 Group 2 Allowance Allocations.

(a) Definitions. For the purpose of this rule, the following definitions apply:

1. Baseline TR SO_2 Group 2 Unit. A TR SO_2 Group 2 unit that either:

(i) Commenced operation on or before January 1, 2014; or

(ii) Submitted a permit application to the Department that was affirmatively deemed complete by the Department in writing on or before January 1, 2014.

2. New TR SO_2 Group 2 Unit. A TR SO_2 Group 2 unit that does not meet the definition of a Baseline SO_2 Group 2 unit as defined in subparagraph (3)(a)1. of this paragraph.

(b) Determination of Heat Input.

1. The heat input (in mmBtu) used for calculating TR SO_2 Group 2 allowance allocations under subparagraph (2)(a) of this rule that are to be submitted to the Administrator by June 1, 2016 will be:

(i) For a Baseline SO_2 Group 2 unit, the average of the three (or less, if applicable) highest amounts of the unit's heat input for the control periods, in which the unit operated, in 2010, 2011, 2012, 2013, and 2014; or

(ii) For a Baseline TR SO_2 Group 2 unit that did not commence operation on or before January 1, 2014 but had submitted a permit application to the Department that was affirmatively deemed complete by the Department in writing on or before January 1, 2014, the expected actual annual heat input based on actual utilization data of similar sources.

(iii) For a New SO_2 Group 2 unit, the expected actual SO_2 heat input based on actual utilization data of similar sources.

2. The heat input (in mmBtu) used for calculating TR SO_2 Group 2 allowance allocations under subparagraph (2)(b) of this rule that are to be submitted to the Administrator by June 1, 2017 will be:

(i) For a Baseline TR SO_2 Group 2 unit, the average of the three (or less, if applicable) highest amounts of the unit's heat input for the control periods, in which the unit operated, in 2011, 2012, 2013, 2014, and 2015; or

(ii) For a Baseline TR SO_2 Group 2 unit that did not commence operation on or before January 1, 2015 but had submitted a permit application to the Department that was affirmatively deemed complete by the Department in writing on or before January 1, 2014, the expected actual annual heat input based on actual utilization data of similar sources.

(iii) For a New TR SO_2 Group 2 unit that commenced operation on or before January 1, 2015, the average of the three (or less, if applicable) highest amounts of the unit's heat input for the control periods, in which the unit operated in 2014 and 2015.

(iv) For a New TR SO_2 Group 2 unit that did not commence operation on or before January 1, 2015, the expected actual SO_2 heat input based on actual utilization data of similar sources.

3. The heat input (in mmBtu) used for calculating TR SO_2 Group 2 allowance allocations under subparagraph (2)(c) of this rule that are to be submitted to the Administrator by June 1, 2018 will be:

(i) For a Baseline TR SO_2 Group 2 unit, the average of the three (or less, if applicable) highest amounts of the unit's heat input, in which the unit operated in 2012, 2013, 2014, 2015, and 2016.

(ii) For a New TR SO_2 Group 2 unit that commenced operation on or before January 1 2016, the average of the three (or less, if applicable) highest amounts of the unit's heat input for the control period in which the unit operated in 2014, 2015, and 2016.

(iii) For a New TR SO_2 Group 2 unit that did not commence operation on or before January 1, 2016, the expected actual annual heat input based on actual utilization data of similar sources.

4. The heat input (in mmBtu) used for calculating TR SO_2 Group 2 allowance allocations under subparagraph (2)(d) of this rule that are to be submitted to the Administrator by June 1, 2019, and all subsequent allocation years will be:

(i) For a Baseline TR SO_2 Group 2 unit, the average of the three (or less, if applicable) highest amounts of the unit's heat input, for the control periods in which the unit operated for the five most recent control periods available prior to the deadline submission year.

(ii) For a New TR SO_2 Group 2 unit that commenced operation prior to January 1 of the most recent control period available prior to the submission year, the average of the three (or less, if applicable) highest amounts of the unit's heat input, for the control periods in which the unit operated, for the five most recent control periods available prior to the submission year; or

(iii) For a New SO_2 Group 2 unit that did not commence operation prior to January 1 of the most recent control period available prior to the submission year, the expected actual annual heat input based on actual utilization data of similar sources.

5. The unit's total heat input for the control period in each year specified under subparagraph (b) of this paragraph will be determined in accordance with 40

CFR 75 if the TR SO_2 Group 2 unit was otherwise subject to the requirements of 40 CFR 75 for the year, or will be based on the best available data reported to the Administrator and the Department for the unit if the unit was not otherwise subject to the requirements of 40 CFR 75 for the year.

(c) Establishment of Baseline and Retired Unit Allowance Pools. At the time Transport Rule (TR) SO_2 Group 2 allowances are initially allocated to baseline TR SO_2 Group 2 units under subparagraph (2)(a) of this rule, each unit's allocation will be permanently recorded as that unit's "Baseline Allowance". This value will be used to calculate the following:

1. Baseline Allowance Pool. The Baseline Allowance Pool shall be calculated each time TR SO_2 Group 2 allowances are allocated under paragraph (2) of this rule and shall equal the State SO_2 Group 2 Trading Program Budget minus the total of the Baseline Allowances for all baseline TR SO_2 Group 2 units that have retired in accordance with 335-3-5-.08.

2. Retired Unit Allowance Pool. The Retired Unit Allowance Pool shall be calculated each time TR SO_2 Group 2 allowances are allocated under paragraph (2) of this rule and shall equal the sum of the Baseline Allowances for all TR SO_2 Group 2 units that have retired in accordance with 335-3-5-.08.

(d) Maximum Historic Emission Cap. The maximum historic emission cap is identified by using an 8 year historic emission period for each TR SO_2 Group 2 unit. The last year of the 8 year period will be the same year as the last year used for determination of heat input under paragraph (3)(b) of this rule. The maximum historic emission cap is the maximum SO_2 emissions (in tons) that occurred during any control period during the 8 year historic emission period. Data used for this purpose shall be obtained from the EPA Clean Air Markets Division (CAMD). An additional emission cap may be applied if a TR SO_2 Group 2 unit has an enforcement action or permit limit in place. The 8 year historic emission values will update every two years to coincide with the allocation control period.

(e) Calculation of TR SO_2 Group 2 Allowances for Baseline TR SO_2 Group 2 Units.

1. For each control period under subparagraph (2) of this rule, the Department will allocate TR SO_2 Group 2 allowances from the Baseline Allowance Pool to all baseline TR SO_2 Group 2 units in accordance with the following procedures:

(i) The Department will allocate TR SO_2 Group 2 allowances to each TR SO_2 Group 2 unit under 335-3-5-.07(1)(a) in an amount equaling the unit's share of the State's total 3 year average of heat input determined in accordance with subparagraph (b) of this paragraph, multiplied by the baseline allowance pool. If a TR SO_2 Group 2 unit has an initial historic heat input based allocation

that exceeds its maximum historic emission cap as defined in subparagraph (3)(e) of this rule, then its allocation will equal the maximum historic emission cap for that TR SO_2 Group 2 unit.

(ii) Allocations remaining after the application of the maximum historic emission cap are reapportioned on the same basis to baseline TR SO_2 Group 2 units whose historic heat input based allocation does not exceed its maximum historic emission cap, if applicable. These steps are repeated until the entire Baseline Allocation Pool is allocated. The resulting TR SO_2 Group 2 allocation value is rounded to the nearest whole ton.

(f) Calculation of SO_2 Allowances for New TR SO_2 Group 2 Units. For each control period under paragraph (2) of this rule, after calculating SO_2 allowances for all baseline TR SO_2 Group 2 units that have not retired in accordance with 335-3-5-.08, the Department will allocate SO_2 allowances in the Retired Unit Allowance Pool to all new SO_2 Group 2 season units, in accordance with the following procedures:

1. For each new TR SO_2 Group 2 unit under 335-3-5-.07(1)(a), that commenced operation or submitted a permit application affirmatively deemed complete by the Department in writing on or before March 1 of the year allocations are to be submitted to the Administrator under paragraph (2) of this rule, the number of TR SO_2 Group 2 allowances allocated for each applicable control period will be equal to the unit's share of the State's total 3 year average of heat input for all new TR SO_2 Group 2 units, determined in accordance with subparagraph (b) of this paragraph multiplied by the Retired Unit Allowance Pool. If a new TR SO_2 Group 2 unit has an initial historic heat input based allocation that exceeds its maximum historic emission cap as defined in subparagraph (3)(e) of this rule, then its allocation equals the maximum historic emission cap for that TR SO_2 Group 2 unit .

2. Allocations remaining after application of the maximum historic emission cap are reapportioned on the same basis to new TR SO_2 Group 2 units whose historic heat input based allocation does not exceed its maximum historic emission cap, if applicable. These steps are repeated until the entire Retired Unit Allowance Pool is allocated or until all new units receive allocations equal to its maximum historic emission cap. The resulting TR SO_2 Group 2 allocation value is rounded to the nearest whole ton.

(g) Adjustment of Baseline SO_2 Allowance Allocations. If TR SO_2 Group 2 allowances remain in the Retired Unit Allowance Pool after allocations are made to all new TR SO_2 Group 2 units in accordance with subparagraph (f) of this paragraph, these SO_2 allowances will be allocated on a pro rata basis to the baseline TR SO_2 Group 2 units where historic heat input based allocation does not exceed its maximum historic emission cap, for the applicable control periods.

(h) SO_2 allowances allocated to baseline TR SO_2 Group 2 units based on heat inputs determined in accordance with subparagraph (b)1.(ii) or (b)2.(ii) of

this paragraph will be held in the State's general account until the unit commences operation, prior to or during the control period for which SO_2 allowances were allocated. If the unit does not commence operations, the SO_2 allowances will be transferred by the Department pro rata to Baseline TR SO_2 Group 2 units that were allocated SO_2 allowances in accordance with subparagraphs (b)1.(i) or (b)2.(i) of this paragraph, and whose historic heat input based allocation does not exceed its maximum historic emission cap if applicable. By January 30 of the following year, the Department shall notify the Administrator of the appropriate SO_2 allowance transfers.

1. SO_2 allowances allocated to new TR SO_2 Group 2 units based on heat inputs determined in accordance with subparagraphs (b)1.(iii), (b)2.(iv), (b)3.(iii), or (b)4.(iii) of this paragraph will be held in the State's general account until the unit commences operation, prior to or during the control period for which SO_2 allowances were allocated. If the unit does not commence operations, the SO_2 allowances will be transferred by the Department pro rata to Baseline TR SO_2 Group 2 units that were allocated SO_2 allowances in accordance with subparagraphs (b)1.(i) and (ii), (b)2.(i) and (ii), (b)3.(i), or (b)4.(i) of this paragraph, and whose historic heat input based allocation does not exceed its maximum historic emission cap if applicable. By January 30 of the following year, the Department shall notify the Administrator of the appropriate SO_2 allowance transfers.

2. SO_2 allowances will not be allocated to TR SO_2 Group 2 units that retire under 335-3-5-.08 prior to the date SO_2 allowance allocations are submitted to the Administrator under subparagraphs (2)(a), (b), (c), or (d) of this Rule.

3. The total SO_2 Group 2 allowances allocated for any control period in accordance with subparagraphs (3)(f), and (g) of this paragraph shall not exceed the State SO_2 Group 2 Trading Program Budget as determined by the applicable, approved State Implementation Plan.

(i) Distribution of remaining TR SO_2 Group 2 Allowances. If any TR SO_2 Group 2 allowances remain after allocations are completed in subparagraphs (e) through (h) of this paragraph, the remaining allowances shall be distributed proportional to the allocations made in subparagraphs (e) through (h) of this paragraph beyond the unit's historical emissions cap. However, no unit may receive additional allocations that exceed any enforcement cap or permit limitation.

(j) Units Incorrectly Allocated TR SO_2 Group 2 Allowances. The procedures for addressing units that were incorrectly allocated TR SO_2 Group 2 allowances are incorporated by reference as they exist in 40 CFR §97.711(c), Subpart DDDDD as of July 1, 2015. (The materials incorporated by reference are available for purchase and inspection at the Department's offices.)

Author: Ronald W. Gore.
Statutory Authority: Code of Alabama 1975, §§22-28-10, 22-28-11, 22-28-14, 22-28-18, 22-28-20, 22-28-22, 22-22A-5, 22-22A-6, and 22-22A-8.
History: Effective Date: November 24, 2015.

Amended: Filed: October 23, 2018; Effective: December 7, 2018.

335-3-5-.14 Authorization of Designated Representative and Alternate Designated Representative.

(1) General. The Environmental Protection Agency Regulations governing the Authorization of Designated Representative and Alternate Designated Representative for TR SO_2 Sources, are incorporated by reference as they exist in 40 CFR §97.713, Subpart DDDDD as of July 1, 2015. (The materials incorporated by reference are available for purchase and inspection at the Department's offices.)

Author: Ronald W. Gore.
Statutory Authority: Code of Alabama 1975, §§22-28-10, 22-28-11, 22-28-14, 22-28-18, 22-28-20, 22-28-22, 22-22A-5, 22-22A-6, and 22-22A-8.
History: Effective Date: November 24, 2015.

335-3-5-.15 Responsibilities of Designated Representative and Alternate Designated Representative.

(1) General. The Environmental Protection Agency Regulations governing the Responsibilities of Designated Representative and Alternate Designated Representative for TR SO_2 Sources, are incorporated by reference as they exist in 40 CFR §97.714, Subpart DDDDD as of July 1, 2015. (The materials incorporated by reference are available for purchase and inspection at the Department's offices.)

Author: Ronald W. Gore.
Statutory Authority: Code of Alabama 1975, §§22-28-10, 22-28-11, 22-28-14, 22-28-18, 22-28-20, 22-28-22, 22-22A-5, 22-22A-6, and 22-22A-8.
History: Effective Date: November 24, 2015.

335-3-5-.16 Changing Designated Representative and Alternate Designated Representative; Changes in Owners and Operators; Changes in Units at the Source.

(1) General. The Environmental Protection Agency Regulations governing Changing Designated Representative and Alternate Designated Representative; Changes in Owners and Operators; Changes in Units at the Source for TR SO_2 Sources, are incorporated by reference as they exist in 40 CFR §97.715, Subpart DDDDD as of July 1, 2015. (The materials incorporated by reference are available for purchase and inspection at the Department's offices.)

Author: Ronald W. Gore.
Statutory Authority: Code of Alabama 1975, §§22-28-10, 22-28-11, 22-28-14, 22-28-18, 22-28-20, 22-28-22, 22-22A-5, 22-22A-6, and 22-22A-8.

History: Effective Date: November 24, 2015.

335-3-5-.17 Certificate of Representation.

(1) General. The Environmental Protection Agency Regulations governing Certificate of Representation, are incorporated by reference as they exist in 40 CFR §97.716, Subpart DDDDD as of July 1, 2015. (The materials incorporated by reference are available for purchase and inspection at the Department's offices.)

Author: Ronald W. Gore.
Statutory Authority: Code of Alabama 1975, §§22-28-10, 22-28-11, 22-28-14, 22-28-18, 22-28-20, 22-28-22, 22-22A-5, 22-22A-6, and 22-22A-8.
History: Effective Date: November 24, 2015.

335-3-5-.18 Objections Concerning Designated Representative and Alternate Designated Representative.

(1) General. The Environmental Protection Agency Regulations governing Objections Concerning Designated Representative and Alternate Designated Representative, are incorporated by reference as they exist in 40 CFR §97.717, Subpart DDDDD as of July 1, 2015. (The materials incorporated by reference are available for purchase and inspection at the Department's offices.)

(2) Word, Phrase, and Rule Substitutions. For the purpose of rule 335- 3-5-.18 substitute:

(a) Only in 40 CFR §97.717(c) substitute "Neither the Administrator nor the Department shall" for "The Administrator will not."

Author: Ronald W. Gore.
Statutory Authority: Code of Alabama 1975, §§22-28-10, 22-28-11, 22-28-14, 22-28-18, 22-28-20, 22-28-22, 22-22A-5, 22-22A-6, and 22-22A-8.
History: Effective Date: November 24, 2015.

335-3-5-.19 Delegation by Designated Representative and Alternate Designated Representative.

(1) General. The Environmental Protection Agency Regulations governing Delegation by Designated Representative and Alternate Designated Representative, are incorporated by reference as they exist in 40 CFR §97.718, Subpart DDDDD as of July 1, 2015. (The materials incorporated by reference are available for purchase and inspection at the Department's offices.)

Author: Ronald W. Gore.
Statutory Authority: Code of Alabama 1975, §§22-28-10, 22-28-11, 22-28-14, 22-28-18, 22-28-20, 22-28-22, 22-22A-5, 22-22A-6, and 22-22A-8.

History: Effective Date: November 24, 2015.

335-3-5-.20 Reserved.

335-3-5-.21 Establishment of Compliance Accounts, Assurance Accounts, and General Accounts.

(1) General. The Environmental Protection Agency Regulations governing Establishment of Compliance Accounts, Assurance Accounts, and General Accounts, are incorporated by reference as they exist in 40 CFR

§97.720, Subpart DDDDD as of July 1, 2015. (The materials incorporated by reference are available for purchase and inspection at the Department's offices.)

(2) Word, Phrase, and Rule Substitutions. For the purpose of rule 335- 3-5-.21 substitute:

(a) Only in 40 CFR §97.720(c)(4)(iii) substitute "Neither the Administrator nor the Department shall" for "The Administrator will not."

Author: Ronald W. Gore.
Statutory Authority: Code of Alabama 1975, §§22-28-10, 22-28-11, 22-28-14, 22-28-18, 22-28-20, 22-28-22, 22-22A-5, 22-22A-6, and 22-22A-8.
History: Effective Date: November 24, 2015.

335-3-5-.22 Recordation of TR SO_2 Allowance Allocations and Auction Results.

(1) General. The Environmental Protection Agency Regulations governing Recordation of TR SO_2 Allowance Allocations and Auction Results, are incorporated by reference as they exist in 40 CFR §97.721, Subpart DDDDD as of July 1, 2015, except for the provisions found in 40 CFR §§97.721(a), (b), (h), and (i). (The materials incorporated by reference are available for purchase and inspection at the Department's offices.)

Author: Ronald W. Gore.
Statutory Authority: Code of Alabama 1975, §§22-28-10, 22-28-11, 22-28-14, 22-28-18, 22-28-20, 22-28-22, 22-22A-5, 22-22A-6, and 22-22A-8.
History: Effective Date: November 24, 2015.

335-3-5-.23 Submission of TR SO_2 Allowance Transfers.

(1) General. The Environmental Protection Agency Regulations governing Submission of TR NO_X Annual Allowance Transfers, are incorporated by reference as they exist in 40 CFR §97.722, Subpart DDDDD as of July 1, 2015. (The materials incorporated by reference are available for purchase and inspection at the Department's offices.)

Author: Ronald W. Gore.
Statutory Authority: Code of Alabama 1975, §§22-28-10, 22-28-11, 22-28-14, 22-28-18, 22-28-20, 22-28-22, 22-22A-5, 22-22A-6, and 22-22A-8.
History: Effective Date: November 24, 2015.

335-3-5-.24 Recordation of TR SO_2 Allowance Transfers.

(1) General. The Environmental Protection Agency Regulations governing, Recordation of TR SO_2 Allowance Transfers are incorporated by reference as they exist in 40 CFR §97.723, Subpart DDDDD as of July 1, 2015. (The materials incorporated by reference are available for purchase and inspection at the Department's offices.)

Author: Ronald W. Gore.
Statutory Authority: Code of Alabama 1975, §§22-28-10, 22-28-11, 22-28-14, 22-28-18, 22-28-20, 22-28-22, 22-22A-5, 22-22A-6, and 22-22A-8.
History: Effective Date: November 24, 2015.

335-3-5-.25 Compliance with TR SO_2 Emissions Limitation.

(1) General. The Environmental Protection Agency Regulations governing Compliance with TR SO_2 Emissions Limitation, are incorporated by reference as they exist in 40 CFR §97.724, Subpart DDDDD as of July 1, 2015. (The materials incorporated by reference are available for purchase and inspection at the Department's offices.)

Author: Ronald W. Gore.
Statutory Authority: Code of Alabama 1975, §§22-28-10, 22-28-11, 22-28-14, 22-28-18, 22-28-20, 22-28-22, 22-22A-5, 22-22A-6, and 22-22A-8.
History: Effective Date: November 24, 2015.

335-3-5-.26 Compliance with TR SO_2 Assurance Provisions.

(1) General. The Environmental Protection Agency Regulations governing Compliance with TR SO_2 Assurance Provisions, are incorporated by reference as they exist in 40 CFR §97.725, Subpart DDDDD as of July 1, 2015. (The materials incorporated by reference are available for purchase and inspection at the Department's offices.)

Author: Ronald W. Gore.
Statutory Authority: Code of Alabama 1975, §§22-28-10, 22-28-11, 22-28-14, 22-28-18, 22-28-20, 22-28-22, 22-22A-5, 22-22A-6, and 22-22A-8.
History: Effective Date: November 24, 2015.

335-3-5-.27 Banking.

(1) General. The Environmental Protection Agency Regulations governing Banking for TR SO_2 Allowance, are incorporated by reference as they exist in 40 CFR §97.726, Subpart DDDDD as of July 1, 2015. (The materials incorporated by reference are available for purchase and inspection at the Department's offices.)

(2) Word, Phrase, and Rule Substitutions. For the purpose of rule 335- 3-5-.27 substitute:

(a) Adem Administrative Code r. 335-3-5-.13(3)(j) for 40 CFR §97.711(c).

Author: Ronald W. Gore.
Statutory Authority: Code of Alabama 1975, §§22-28-10, 22-28-11, 22-28-14, 22-28-18, 22-28-20, 22-28-22, 22-22A-5, 22-22A-6, and 22-22A-8.
History: Effective Date: November 24, 2015.

335-3-5-.28 Account Error.

(1) General. The Environmental Protection Agency Regulations governing Account Error, are incorporated by reference as they exist in 40 CFR §97.727, Subpart DDDDD as of July 1, 2015. (The materials incorporated by reference are available for purchase and inspection at the Department's offices.)

Author: Ronald W. Gore.
Statutory Authority: Code of Alabama 1975, §§22-28-10, 22-28-11, 22-28-14, 22-28-18, 22-28-20, 22-28-22, 22-22A-5, 22-22A-6, and 22-22A-8.
History: Effective Date: November 24, 2015.

335-3-5-.29 Administrator's Action on Submissions.

(1) General. The Environmental Protection Agency Regulations governing Administrator's Action on Submissions, are incorporated by reference as they exist in 40 CFR §97.728, Subpart DDDDD as of July 1, 2015. (The materials incorporated by reference are available for purchase and inspection at the Department's offices.)

Author: Ronald W. Gore.
Statutory Authority: Code of Alabama 1975, §§22-28-10, 22-28-11, 22-28-14, 22-28-18, 22-28-20, 22-28-22, 22-22A-5, 22-22A-6, and 22-22A-8.
History: Effective Date: November 24, 2015.

335-3-5-.30 Reserved.

335-3-5-.31 General Monitoring, Recordkeeping, and Reporting Requirements

(1) General. The Environmental Protection Agency Regulations governing General Monitoring, Recordkeeping, and Reporting Requirements, are incorporated by reference as they exist in 40 CFR §97.730, Subpart DDDDD as of July 1, 2015. (The materials incorporated by reference are available for purchase and inspection at the Department's offices.)

(2) Word, Phrase, and Rule Substitutions. For the purpose of rule 335- 3-5-.31 substitute:

(a) Adem Administrative Code r. 335-3-5-.08 for 40 CFR §97.705.

Author: Ronald W. Gore.
Statutory Authority: Code of Alabama 1975, §§22-28-10, 22-28-11, 22-28-14, 22-28-18, 22-28-20, 22-28-22, 22-22A-5, 22-22A-6, and 22-22A-8.
History: Effective Date: November 24, 2015.

335-3-5-.32 Initial Monitoring System Certification and Recertification Procedures.

(1) General. The Environmental Protection Agency Regulations governing Initial Monitoring System Certification and Recertification Procedures, are incorporated by reference as they exist in 40 CFR §97.731, Subpart DDDDD as of July 1, 2015. (The materials incorporated by reference are available for purchase and inspection at the Department's offices.)

(2) Word, Phrase, and Rule Substitutions. For the purpose of rule 335- 3-5-.32 substitute:

(a) In §97.731(d)(3)(i) insert ", the Department" after "Office."

Author: Ronald W. Gore.
Statutory Authority: Code of Alabama 1975, §§22-28-10, 22-28-11, 22-28-14, 22-28-18, 22-28-20, 22-28-22, 22-22A-5, 22-22A-6, and 22-22A-8.
History: Effective Date: November 24, 2015.

335-3-5-.33 Monitoring System Out-of-Control Periods.

(1) General. The Environmental Protection Agency Regulations governing Monitoring System Out-of-Control Periods, are incorporated by reference as they exist in 40 CFR §97.732, Subpart DDDDD as of July 1, 2015. (The materials incorporated by reference are available for purchase and inspection at the Department's offices.)

Author: Ronald W. Gore.
Statutory Authority: Code of Alabama 1975, §§22-28-10, 22-28-11, 22-28-14, 22-28-18, 22-28-20, 22-28-22, 22-22A-5, 22-22A-6, and 22-22A-8.
History: Effective Date: November 24, 2015.

335-3-5-.34 Notifications Concerning Monitoring.

(1) General. The Environmental Protection Agency Regulations governing Notifications Concerning Monitoring, are incorporated by reference as they exist in 40 CFR §97.733, Subpart DDDDD as of July 1, 2015. (The materials incorporated by reference are available for purchase and inspection at the Department's offices.)

Author: Ronald W. Gore.
Statutory Authority: Code of Alabama 1975, §§22-28-10, 22-28-11, 22-28-14, 22-28-18, 22-28-20, 22-28-22, 22-22A-5, 22-22A-6, and 22-22A-8.
History: Effective Date: November 24, 2015.

335-3-5-.35 Recordkeeping and Reporting.

(1) General. The Environmental Protection Agency Regulations governing Recordkeeping and Reporting, are incorporated by reference as they exist in 40 CFR §97.734, Subpart DDDDD as of July 1, 2015. (The materials incorporated by reference are available for purchase and inspection at the Department's offices.)

Author: Ronald W. Gore.
Statutory Authority: Code of Alabama 1975, §§22-28-10, 22-28-11, 22-28-14, 22-28-18, 22-28-20, 22-28-22, 22-22A-5, 22-22A-6, and 22-22A-8.
History: Effective Date: November 24, 2015.

335-3-5-.36 Petitions for Alternatives to Monitoring, Recordkeeping, or Reporting Requirements.

(1) General. The Environmental Protection Agency Regulations governing Petitions for Alternatives to Monitoring, Recordkeeping, or Reporting Requirements, are incorporated by reference as they exist in 40 CFR §97.735, Subpart DDDDD as of July 1, 2015. (The materials incorporated by reference are available for purchase and inspection at the Department's offices.)

Author: Ronald W. Gore.
Statutory Authority: Code of Alabama 1975, §§22-28-10, 22-28-11, 22-28-14, 22-28-18, 22-28-20, 22-28-22, 22-22A-5, 22-22A-6, and 22-22A-8.
History: Effective Date: November 24, 2015.

ALABAMA DEPARTMENT OF ENVIRONMENTAL MANAGEMENT
AIR DIVISION - AIR POLLUTION CONTROL PROGRAM

CHAPTER 335-3-6
CONTROL OF ORGANIC EMISSIONS

TABLE OF CONTENTS

335-3-6-.01 Applicability
335-3-6-.02 VOC Water Separation
335-3-6-.03 Loading and Storage of VOC
335-3-6-.04 Fixed-Roof Petroleum Liquid Storage Vessels
335-3-6-.05 Bulk Gasoline Plants
335-3-6-.06 Bulk Gasoline Terminals
335-3-6-.07 Gasoline Dispensing Facilities - Stage I
335-3-6-.08 Petroleum Refinery Sources
335-3-6-.09 Pumps and Compressors
335-3-6-.10 Ethylene Producing Plants
335-3-6-.11 Surface Coating
335-3-6-.12 Solvent Metal Cleaning
335-3-6-.13 Cutback Asphalt
335-3-6-.14 Petition for Alternative Controls
335-3-6-.15 Compliance Schedules
335-3-6-.16 Test Methods and Procedures
335-3-6-.17 Manufacture of Pneumatic Rubber Tires
335-3-6-.18 Manufacture of Synthesized Pharmaceutical Products
335-3-6-.19 Reserved
335-3-6-.20 Leaks from Gasoline Tank Trucks and Vapor Collection Systems
335-3-6-.21 Leaks from Petroleum Refinery Equipment
335-3-6-.22 Graphic Arts
335-3-6-.23 Petroleum Liquid Storage in External Floating Roof Tanks
335-3-6-.24 Applicability
335-3-6-.25 VOC Water Separation
335-3-6-.26 Loading and Storage of VOC
335-3-6-.27 Fixed-Roof Petroleum Liquid Storage Vessels
335-3-6-.28 Bulk Gasoline Plants
335-3-6-.29 Bulk Gasoline Terminals
335-3-6-.30 Gasoline Dispensing Facilities - Stage I Control
335-3-6-.31 Reserved
335-3-6-.32 Surface Coating
335-3-6-.33 Solvent Metal Cleaning
335-3-6-.34 Cutback and Emulsified Asphalt
335-3-6-.35 Petition for Alternative Control Strategies
335-3-6-.36 Compliance Schedules

335-3-6-.37 Test Methods and Procedures
335-3-6-.38 Reserved
335-3-6-.39 Manufacture of Synthesized Pharmaceutical Products
335-3-6-.40 Reserved
335-3-6-.41 Leaks from Gasoline Tank Trucks and Vapor Collection Systems
335-3-6-.42 Reserved
335-3-6-.43 Graphic Arts
335-3-6-.44 Petroleum Liquid Storage in External Floating Roof Tanks
335-3-6-.45 Large Petroleum Dry Cleaners
335-3-6-.46 Reserved
335-3-6-.47 Leaks from Coke By-product Recovery Plant Equipment
335-3-6-.48 Emissions from Coke By-product Recovery Plant Coke Oven Gas Bleeder
335-3-6-.49 Manufacture of Laminated Countertops
335-3-6-.50 Paint Manufacture
335-3-6-.51 Reserved
335-3-6-.52 Seasonal Afterburner Shutdown - VOC Control Only
335-3-6-.53 List of EPA Approved and Equivalent Test Methods and Procedures for the Purpose of Determining VOC Emissions

335-3-6-.01 Applicability.

(1) The provisions of this chapter shall apply to all sources of volatile organic compounds (VOC) in accordance with schedules contained in rule 335-3-6-.15 except:

(a) sources in Jefferson County are not subject to the provisions of rules 335-3-6-.02 through 335-3-6-.23 and only VOC sources in Jefferson County are subject to the provisions of rules 335-3-6-.24 through 335-3-6-.52 of this chapter;

(b) sources with a potential VOC emission rate of less than 100 tons/year;

(c) sources used exclusively for chemical or physical analysis or determination of product quality and commercial acceptance provided:

1. the operation of the sources is not an integral part of the production process; and

2. the emissions from sources do not exceed 363 kilograms (800 pounds) in any calendar month.

(2) Rules 335-3-6-.02 and 335-3-6-.03 shall not apply to sources which are located in any county with the exception of Mobile and which were built prior to January 30, 1973.

(3) In addition, the provisions of rule 335-3-6-.03 shall apply to sources which are located in Mobile County regardless of construction date and to sources located in all other counties which were constructed or otherwise came into being after January 30, 1973 regardless of the exceptions provided in paragraph (1) of this rule.

(4) The provisions of rule 335-3-6-.11(6) shall not apply to any sources except those sources in the State which manufacture audio or video recording tape.

(5) The provisions of rules 335-3-6-.17 through 335-3-6-.23, and rules 335-3-6-.11(2), 335-3-6-.11(10), and 335-3-6-.11(11) shall not apply to any source except those located in Etowah, Mobile, and Russell Counties.

(6) The provisions of rules 335-3-6-.05 through 335-3-6-.07 and rule 335-3-6-.20 shall apply to all sources regardless of the exceptions provided in subparagraph (1)(b) of this rule.

Author: James W. Cooper and John E. Daniel.
Statutory Authority: Code of Alabama 1975, §§22-28-14, 22-22A-5, 22-22A-6, and 22-22A-8.
History: Effective Date: January 18, 1972.
Amended: Effective Date: July 26, 1972; November 26, 1979; September 18, 1985; June 9, 1987; November 1, 1990; November 21, 1996.

335-3-6-.02 VOC Water Separation.

(1) Rule 335-3-6-.02 shall apply to VOCs with a true vapor pressure greater than or equal to 1.5 psia under storage conditions.

(2) No person shall use any compartment of any single or multiple compartment VOC water separator which receives effluent water containing 1,000 gallons a day or more of any VOC from processing, refining, treating, storing, or handling VOCs, unless such compartment is equipped with one of the following vapor loss control devices, properly installed, in good working order, and in operation:

(a) a container having all openings sealed and totally enclosing the liquid contents. All gauging and sampling devices shall be gastight, except when gauging or sampling is performed.

(b) a container equipped with a floating roof consisting of a pontoon type, double-deck type roof or internal floating cover which shall rest on the surface of the contents and be equipped with a closure seal or seals to close the space between the roof edge and containing walls. All gauging or sampling devices shall be gastight, except when gauging or sampling is performed.

(c) a container equipped with a vapor recovery system consisting of a vapor gathering system capable of collecting the VOC vapors and gases

dispersed and a vapor disposal system capable of processing such VOC vapors and gases so as to prevent their emission into the atmosphere. All container gauging and sampling devices shall be gastight, except when gauging or sampling is performed.

(d) a container having other equipment of equal efficiency for purposes of air pollution control as may be approved by the Director.

Author: James W. Cooper and John E. Daniel.
Statutory Authority: Code of Alabama 1975, §§22-28-14, 22-22A-5, 22-22A-6, and 22-22A-8.
History: Effective Date: January 18, 1972.
Amended: July 26, 1972; November 26, 1979; September 21, 1989.

335-3-6-.03 Loading and Storage of VOC.

(1) Rule 335-3-6-.03 shall apply to VOCs with a true vapor pressure greater than or equal to 1.5 psia under storage conditions.

(2) No person shall place, store, or hold in any stationary storage vessel of more than 1,000-gallon capacity any VOC unless such vessel is a pressure tank or is equipped with one of the following vapor loss control devices:

(a) a permanent submerged fill pipe (storage vessels in existence prior to January 30, 1973 may employ portable submerged fill pipe).

(b) a floating roof, consisting of a pontoon type, double-deck type roof or internal floating cover, which shall rest on the surface of the liquid contents and be equipped with a closure seal or seals to close the space between the roof edge and tank wall. This control equipment shall not be permitted if the VOCs have a vapor pressure of 11.0 pounds per square inch absolute (568 mm Hg) or greater under actual storage conditions. All tank gauging or sampling devices shall be airtight except when tank gauging or sampling is performed.

(c) a vapor recovery system consisting of a vapor gathering system capable of collecting the VOC vapors and gases discharged, and a vapor disposal system capable of processing such VOC vapors and gases so as to prevent their emission to the atmosphere and with all tank gauging and sampling devices gastight except when gauging or sampling is performed.

(d) other equipment or means of equal efficiency for purposes of air pollution control as may be approved by the Director.

(3) No person shall load any VOCs into any tank truck or trailer having a capacity in excess of two hundred (200) gallons from any terminal or bulk storage facility unless such terminal or facility is equipped with a vapor collection and disposal system or its equivalent, properly installed, in good working order, or has in operation a loading system which will result in a ninety-five percent (95%) submerged fill either with a submerged fill pipe or by

loading from the bottom. Where the vapor collection and disposal system is utilized, the loading arm shall be equipped with a vapor collection adapter, pneumatic, hydraulic, or other mechanical means which will provide a vapor-tight seal between the adapter and the hatch. A means shall be provided to prevent liquid organic compound drainage from the loading device when it is removed from the hatch of any tank, truck, or trailer. When loading is effected through means other than the hatches, all loading lines shall be equipped with fittings which make vapor-tight connections and which will close automatically when disconnected.

(4) This rule shall not apply to crude petroleum produced, separated, treated, or stored in the field.

Author: James W. Cooper and John E. Daniel.
Statutory Authority: Code of Alabama 1975, §§22-28-14, 22-22A-5, 22-22A-6, and 22-22A-8.
History: Effective Date: January 18, 1972.
Amended: November 27, 1979; September 21, 1989.

335-3-6-.04 Fixed-Roof Petroleum Liquid Storage Vessels.

(1) For the purpose of rule 335-3-6-.04, the following definitions apply:

(a) "Condensate" shall mean hydrocarbon liquid separated from natural gas which condenses due to changes in the temperature and/or pressure and remains liquid at standard conditions.

(b) "Crude Oil" shall mean a naturally occurring mixture which consists of hydrocarbons and sulfur, nitrogen and/or oxygen derivatives of hydrocarbons and which is a liquid in the reservoir at standard conditions.

(c) "Custody Transfer" shall mean the transfer of produced crude oil and/or condensate, after processing and/or treating in the producing operations, from storage tanks or automatic transfer facilities to pipelines or any other form of transportation.

(d) "External Floating Roof" shall mean a storage vessel cover in an open top tank consisting of a double deck or pontoon single deck which rests upon and is supported by the petroleum liquid being contained and is equipped with a closure seal or seals to close the space between the roof edge and tank shell.

(e) "Internal Floating Roof" shall mean a cover or roof in a fixed roof tank which rests upon or is floated upon the petroleum liquid being contained and is equipped with a closure seal or seals to close the space between the roof edge and tank shell.

(f) "Petroleum Liquids" shall mean crude oil, condensate, and any finished or intermediate products manufactured or extracted in a petroleum refinery.

(g) "Petroleum Refinery" shall mean any facility engaged in producing gasoline, kerosene, distillate fuel oils, residual fuel oils, lubricants, or other products through distillation, cracking, extraction, or reforming of unfinished petroleum derivatives.

(2) This rule shall apply to all fixed roof storage vessels with capacities greater than 150,000 liters (40,000 gallons) containing petroleum liquids whose true vapor pressure (TVP) is greater than 10.5 kPa (1.52 psia). Vessels containing petroleum liquids whose TVP is equal to or less than 10.5 kPa are exempt, provided that records are maintained of the average monthly storage temperature and TVP of the petroleum liquid stored if the product has a stored TVP greater than 7.0 kPa.

(3) Rule 335-3-6-.04 shall not apply to the following petroleum liquid storage vessels:

(a) equipped with external floating roofs before July 1, 1979; or

(b) having capacities less than 1,600,000 liters (423,000 gallons) used to store produced crude oil and condensate prior to lease custody transfer.

(4) Except as provided under paragraph (3) of this rule, no owner or operator of an affected source under paragraph (2) of this rule shall permit the use of such source unless:

(a) the source has been retrofitted with an internal floating roof equipped with a closure seal or seals to close the space between the roof edge and tank wall; or

(b) the source has been retrofitted with equally effective alternative control, approved by the Director; and

(c) the source is maintained such that there are no visible holes, tears, or other openings in the seal or any seal fabric or materials; and

(d) all openings, except stub drains, are equipped with covers, lids, or seals such that;

1. the cover, lid, or seal is in the closed position at all times except when in actual use; and

2. automatic bleeder vents are closed at all times except when the roof is floated off or landed on the roof leg support; and

3. rim vents, if provided, are set to open when the roof is being floated off the roof leg supports or at the manufacturer's recommended setting; and

(e) routine inspections are conducted through roof hatches once every six months; and

(f) a complete inspection of cover and seals is conducted whenever the tank is emptied for nonoperational reasons.

Author: Wm. Gerald Hardy.
Statutory Authority: Code of Alabama 1975, §§22-28-14, 22-22A-5, 22-22A-6, and 22-22A-8.
History: Effective Date: November 26, 1979.
Amended: November 21, 1996.

335-3-6-.05 Bulk Gasoline Plants.

(1) For the purpose of this rule, the following definitions apply:

(a) "Bottom Filling" shall mean the filling of a tank truck or stationary storage tank through an opening that is flush with the tank bottoms.

(b) "Bulk Gasoline Plant" shall mean a gasoline storage and distribution facility with an average daily throughput equal to or less than 76,000 liters (20,000 gallons) in any calendar month which receives gasoline from bulk terminals by trailer transport, stores it in tanks, and subsequently dispenses it via account trucks to local farms, businesses, and gasoline dispensing facilities.

(c) "Splash Filling" shall mean the filling of a tank truck or stationary tank through a pipe or hose whose discharge opening is above the surface level of the liquid in the tank being filled.

(d) "Vapor Balance System" shall mean a combination of pipes or hoses which create a closed system between the vapor spaces of an unloading and a receiving tank such that vapors displaced from the receiving tank are transferred to the tank being unloaded.

(2) This rule shall apply to the unloading and storage operations of all bulk gasoline plants and all tank trucks or trailers delivering gasoline at bulk gasoline plants, except stationary storage tanks of less than 3,785 liters (1,000 gallons) capacity.

(3) Except as provided under paragraph (2) of this rule, no owner or operator of a bulk gasoline plant may permit the unloading of gasoline into stationary storage tanks unless each tank is equipped with a vapor balance system as described under paragraph (6) of this rule and approved by the Director; and

(a) each tank is equipped with a submerged fill pipe, approved by the Director; or

(b) each tank is equipped with a fill line whose discharge opening is not over 18 inches from the bottom of the tank.

(4) Except as provided under paragraph (2) of this rule, after October 1, 1992, no owner or operator of a bulk gasoline plant, tank truck, or trailer may permit the unloading of tank trucks or trailers at a bulk gasoline plant unless each tank truck or trailer is equipped with a vapor balance system as described under paragraph (6) of this rule and complies with rule 335-3-6-.20(3).

(5) No owner or operator of a bulk gasoline plant, tank truck, or trailer shall permit the transfer of gasoline between tank truck or trailer and stationary storage tank unless:

(a) the transfer is conducted in accordance with paragraphs (3) and (4) of this rule, and

(b) the vapor balance system is in good working order and is connected and operating; and

(c) gasoline tank truck or trailer hatches are covered at all times during unloading operations; and

(d) there are no leaks in the tank trucks' and trailers' pressure/vacuum relief valves and hatch covers, or the truck tanks or storage tanks, or associated vapor and liquid lines during unloading; and

(e) the pressure relief valves on above-ground storage vessels and tank trucks or trailers are set to release at no less than 4.8 kPa (0.7 psia) or the highest possible pressure (in accordance with state or local fire codes or the National Fire Prevention Association guidelines); and

(f) the gasoline tank truck or trailer has a valid Department Air Sticker as required by rule 335-3-6-.20(4) attached and visibly displayed.

(6) Vapor balance system required under paragraphs (3) and (4) of this rule shall consist of the following major components:

(a) a vapor space connection on the stationary storage tank equipped with fittings which are vapor tight and will automatically and immediately close upon disconnection so as to prevent release of organic compounds; and

(b) a connecting pipe or hose equipped with fittings which are vapor tight and will automatically and immediately close upon disconnection so as to prevent release of organic compounds; and

(c) a vapor space connection on the tank truck or trailer equipped with fittings which are vapor tight and will automatically and immediately close upon disconnection so as to prevent release of organic material.

(7) Except as provided under paragraph (2) of this rule after October 1, 1998, no owner or operator of a bulk gasoline plant, tank truck, or trailer may permit the loading of gasoline into tank trucks or trailers that are returning with vapors from gasoline dispensing facilities affected by rule 335-3-6-.07

unless each tank truck or trailer and the stationary storage tank is equipped with a vapor balance system as described under paragraph (6) of this rule and complies with rule 335-3-6-.20(3) and

(a) equipment is available at the bulk gasoline plant to provide for the submerged filling of each tank truck or trailer; or

(b) each tank truck or trailer is equipped for bottom filling.

(8) No owner or operator of a bulk gasoline plant may permit the disposal of waste gasoline in sewers, open containers or in a manner that would result in evaporation.

Author: Wm. Gerald Hardy.
Statutory Authority: Code of Alabama 1975, §§22-28-14, 22-22A-5, 22-22A-6, and 22-22A-8.
History: Effective Date: November 26, 1979.
Amended: November 1, 1990; October 24, 1991; October 30, 1992; November 21, 1996.

335-3-6-.06 Bulk Gasoline Terminals.

(1) For the purpose of this rule, the following definition applies:

(a) "Bulk Gasoline Terminal" shall mean a gasoline storage facility which receives gasoline from its supply source primarily by pipelines, ships, barges and delivers gasoline to bulk gasoline plant or to commercial or retail accounts primarily by tank trucks and has an average daily throughput of more than 76,000 liters (20,000 gallons) of gasoline in any calendar month.

(2) This rule will apply to bulk gasoline terminals and the appurtenant equipment necessary to load the tank truck or trailer compartments.

(3) No person may load gasoline into any tank truck or trailer from any bulk gasoline terminal unless;

(a) the bulk gasoline terminal is equipped with a vapor recovery system capable of complying with paragraph (4) of this rule, properly installed, in good working order, in operation, and consisting of one of the following:

1. an adsorber or condensation system which processes and recovers at least ninety percent (90%) by weight of all vapors and gases from the equipment being controlled; or

2. a vapor collection system which directs all vapors to a fuel gas system; or

3. a control system demonstrated to have control efficiency equivalent to or greater than subparagraph (a)1. or (a)2.of this paragraph and approved by the Director; and

(b) all displaced vapors and gases are vented only to the vapor control system; and

(c) a means is provided to prevent liquid drainage from the loading device when it is not in use or to accomplish complete drainage before the loading device is disconnected; and

(d) all loading and vapor lines are equipped with fittings which make vapor-tight connections and which close automatically when disconnected; and

(e) the gasoline tank truck or trailer has a valid Department Air Sticker as required by rule 335-3-6-.20(4) attached and visibly displayed.

(4) Sources affected under subparagraph (3)(a) of this rule may not allow mass emissions of VOCs from control equipment to exceed 80 milligrams per liter (4.7 grains per gallon) of gasoline loaded.

(5) Sources affected under paragraph (2) of this rule may not:

(a) allow the pressure in the vapor collection system to exceed the tank truck or trailer pressure relief settings; nor

(b) allow the disposal of waste gasoline in sewers, open containers or in a manner that would result in evaporation.

Author: Wm. Gerald Hardy.
Statutory Authority: Code of Alabama 1975, §§22-28-14, 22-22A-5, 22-22A-6, and 22-22A-8.
History: Effective Date: November 26, 1979.
Amended: November 1, 1990; October 24, 1991; November 21, 1996; September 7, 2000.

335-3-6-.07 Gasoline Dispensing Facilities - Stage I.

(1) For the purpose of this rule, the following definitions apply:

(a) "Gasoline Tank Truck" shall mean tank trucks or trailers equipped with a storage tank and used for the transport of gasoline from sources of supply to stationary storage tanks of gasoline dispensing facilities.

(b) "Gasoline Dispensing Facility" shall mean any outlet where gasoline is dispensed to motor vehicle gasoline tanks from stationary storage tanks.

(c) "Vapor Balance System (Stage I)" means a vapor-tight system that transfers the vapors displaced from the stationary storage tanks to the gasoline tank truck.

(2) This rule will apply to all gasoline dispensing facilities that commenced construction after October 1, 1990. This rule also applies to any gasoline dispensing facility whose tank or tanks are replaced, upgraded, modified, reconstructed, altered, or removed after October 1, 1990 except;

(a) transfers made to storage tanks or gasoline dispensing facilities equipped with floating roofs or their equivalent;

(b) transfers made to stationary gasoline storage tanks of less than 11,356 liters (3,000 gallons) capacity;

(c) stationary gasoline storage containers of less than 2,082 liters (550 gallons) capacity used exclusively for the fueling of implements of husbandry, provided the containers are equipped with a submerged fill pipe.

(d) any new or modified existing facility, regardless of tank upgrade, with an actual or expected throughput of gasoline of less than 4,000 gallons per month for the months of June, July, and August during full operation, provided that all gasoline storage tanks that are not exempted under subparagraphs (a), (b), and (c) of this paragraph are equipped with a submerged fill pipe.

(3) No owner or operator may transfer, cause, or allow the transfer of gasoline from any gasoline tank truck into any stationary storage tank subject to this rule, unless the tank is equipped with a submerged fill pipe and the vapors displaced from the storage tank during filling are processed by a vapor control system in accordance with paragraph (4) of this rule.

(4) The vapor control system required by paragraph (3) of this rule shall include one or more of the following:

(a) a vapor balance system (Stage I) between the stationary storage tank and the gasoline tank truck and a system that will ensure the vapor line is connected before gasoline can be transferred into the tank; or

(b) a refrigeration condensation system or equivalent designed to recover at least ninety percent (90%) by weight of the organic compounds in displaced vapor; or

(c) a system demonstrated to have control efficiency equivalent to or greater than provided under subparagraph (4)(b) above and approved by the Director.

(5) Each owner or operator of a gasoline dispensing facility subject to this rule shall:

(a) not permit the transfer of gasoline between a gasoline tank truck and a stationary storage tank unless the gasoline tank truck complies with rule 335-3-6-.20 and the vapor control system is connected and operating in accordance with paragraph (4) of this rule;

(b) maintain written records of the monthly throughput quantities in gallons and types of petroleum distillates in all stationary storage tanks; and

(c) make available to representatives of the Director upon request copies of all records required under subparagraph (b) of this paragraph and retain the records for a minimum of two (2) years after the date on which the documents were made.

(6) No owner or operator of a gasoline dispensing facility subject to this rule shall cause or allow gasoline to be spilled, discarded in sewers, stored in open containers, or handled in any other manner that would result in evaporation of the gasoline to the atmosphere.

(7) Regardless of the applicability exemption under subparagraph (2)(d) of this rule, all gasoline dispensing facilities that are subject to this rule shall maintain the system in proper working order in accordance with this rule even if the facility's average monthly throughput of gasoline decreases to less than 4,000 gallons.

Author: Wm. Gerald Hardy.
Statutory Authority: Code of Alabama 1975, §§22-28-14, 22-22A-5, 22-22A-6, and 22-22A-8.
History: Effective Date: November 26, 1979.
Amended: November 1, 1990; October 24, 1991; November 21, 1996.

335-3-6-.08 Petroleum Refinery Sources.

(1) For the purpose of this rule, the following definitions apply:

(a) "Accumulator" shall mean the reservoir of a condensing unit receiving the condensate from the condenser.

(b) "Condenser" shall mean any heat transfer device used to liquify vapors by removing their latent heats of vaporization. Such devices include, but are not limited to, shell and tube, coil, surface, or contact condensers.

(c) "Firebox" shall mean the chamber or compartment of a boiler or furnace in which materials are burned, but does not mean the combustion chamber of an incinerator.

(d) "Hot Well" shall mean the reservoir of a condensing unit receiving the warm condensate from the condenser.

(e) "Refinery Fuel Gas" shall mean any gas which is generated by a petroleum refinery process unit and which is combusted, including any gaseous mixture of natural gas and fuel gas.

(f) "Turnaround" shall mean the procedure of shutting a refinery unit down after a run to do necessary maintenance and repair work and putting the unit back on stream.

(g) "Vacuum Producing System" shall mean any reciprocating, rotary or centrifugal blower or compressor or any jet ejector or device that takes suction from a pressure below atmosphere and discharges against atmospheric pressure.

(2) This rule will apply to vacuum producing systems and process unit turnarounds at petroleum refining sources.

(3) The owner or operator of any vacuum producing systems at a petroleum refinery may not permit the emission of noncondensable VOCs from the condensers, hot wells, or accumulators of the system unless:

(a) the vapors are combusted in a firebox or incinerator; or

(b) the vapors are added to the refinery fuel gas.

(4) Before April 1, 1980, the owner or operator of a petroleum refinery shall develop and submit to the Director for approval a detailed procedure for minimizing VOC emissions during process unit turnaround. As a minimum, the procedure shall provide for:

(a) depressurization venting of the process unit or vessel to a vapor recovery system, flare, or firebox; and

(b) no emission of VOCs from a process unit or vessel until its internal pressure is 136 kPa (19.6 psia) or less.

(5) The owner or operator of any wastewater (oil/water) separators at a petroleum refinery shall:

(a) Provide covers and seals approved by the Director on all separators and forebays; and,

(b) Equip all openings in covers, separators, and forebays with lids and seals such that the lids or seals are in the closed position at all times except when in actual use.

Author: Wm. Gerald Hardy.
Statutory Authority: Code of Alabama 1975, §§22-28-14, 22-22A-5, 22-22A-6, and 22-22A-8.
History: Effective Date: November 26, 1979.
Amended: September 7, 2000.

335-3-6-.09 Pumps and Compressors. All pumps and compressors handling VOCs and located in Mobile County shall have mechanical seals or other equipment of equal efficiency for purposes of air pollution as may be approved by the Director.

Author: James W. Cooper and John E. Daniel.
Statutory Authority: Code of Alabama 1975, §§22-28-14, 22-22A-5, 22-22A-6, and 22-22A-8.
History: Effective Date: January 18, 1972.
Amended: November 26, 1979.

335-3-6-.10 Ethylene Producing Plants. No person shall emit into the atmosphere a waste gas stream from any ethylene producing plant which is located in Mobile County, unless the waste gas stream is properly burned at 1300 °F for 0.3 seconds or greater in a direct-flame afterburner equipped with an indicating pyrometer which is positioned in the working area at the operator's eye level or an equally effective catalytic vapor incinerator also with pyrometer.

Author: James W. Cooper and John E. Daniel.
Statutory Authority: Code of Alabama 1975, §§22-28-14, 22-22A-5, 22-22A-6, and 22-22A-8.
History: Effective Date: January 18, 1972.
Amended: November 26, 1979.

335-3-6-.11 Surface Coating.

(1) Can Coating.

(a) For the purpose of this paragraph, the following definitions apply:

1. "End Sealing Compound" shall mean a synthetic rubber compound which is coated onto can ends and which functions as a gasket when the end is assembled on the can.

2. "Exterior Base Coating" shall mean a coating applied to the exterior of a can to provide exterior protection to the metal and to provide background for the lithographic or printing operation.

3. "Interior Base Coating" shall mean a coating applied by roller coater or spray to the interior of a can to provide a protective lining between the can metal and product.

4. "Interior Body Spray" shall mean a coating sprayed on the interior of the can to provide a protective film between the product and the can.

5. "Overvarnish" shall mean a coating applied directly over ink to reduce the coefficient of friction, to provide gloss, and to protect the finish against abrasion and corrosion.

6. "Three-Piece Can Side-Seam Spray" shall mean a coating sprayed on the exterior and interior of a welded, cemented, or soldered seam to protect the exposed metal.

7. "Two-Piece Can Exterior End Coating" shall mean a coating applied by roller coating or spraying to the exterior of a can to provide protection to the metal.

(b) This paragraph will apply to coating applicator(s) and oven(s) of sheet, can, or end coating lines involved in sheet basecoat (exterior and interior) and overvarnish; two-piece can exterior (basecoat and overvarnish); two-piece and three-piece can interior body spray; two-piece can exterior end (spray or roll coat); three-piece can side-seam spray and end sealing compound operations.

(c) No owner or operator of a can coating line subject to this paragraph shall cause, allow, or permit the discharge into the atmosphere of any VOCs in excess of:

1. 0.34 kilograms per liter of coating (2.8 pounds per gallon), excluding water, delivered to the coating applicator from sheet basecoat (exterior and interior) and overvarnish or two-piece can exterior (basecoat and overvarnish) operations.

2. 0.51 kilograms per liter of coating (4.2 pounds per gallon), excluding water, delivered to the coating applicator from two-piece and three-piece can interior body spray and two-piece can exterior end (spray or roll coat) operations.

3. 0.66 kilograms per liter of coating (5.5 pounds per gallon), excluding water, delivered to the coating applicator from three-piece can side seam spray operations.

4. 0.44 kilograms per liter of coating (3.7 pounds per gallon), excluding water, delivered to the coating applicator from end sealing compound operations.

(2) Coil Coating.

(a) For the purpose of this paragraph, the following definitions apply:

1. "Coil Coating" shall mean the coating of any flat metal sheet or strip that comes in rolls or coils.

2. "Quench Area" shall mean a chamber where the hot metal exiting the oven is cooled by either a spray of water or a blast of air followed by water cooling.

(b) This paragraph, will apply to the coating applicator(s), oven(s), and quench area(s) of coil coating lines involved in prime and top coat or single coat operations.

(c) No owner or operator of a coil coating line subject to this paragraph, may cause, allow, or permit the discharge into the atmosphere of VOCs in excess of 0.31 kilograms per liter of coating (2.6 pounds per gallon), excluding water, delivered to the coating applicator from prime and topcoat or single coat operations.

(3) Metal Furniture Coating.

(a) For the purpose of this paragraph, the following definitions apply:

1. "Application Area" shall mean the area where the coating is applied by spraying, dipping, or flowcoating techniques.

2. "Metal Furniture Coating" shall mean the surface coating of any furniture made of metal or any metal part which will be assembled with other metal, wood, fabric, plastic, or glass parts to form a furniture piece.

(b) This paragraph, will apply to the application areas, flashoff area(s), and oven(s) of metal furniture coating lines involved in prime and topcoat or single coating operations.

(c) No owner or operator of a metal furniture coating line subject to this paragraph, may cause, allow, or permit the discharge into the atmosphere of any VOCs in excess of 0.36 kilograms per liter of coating (3.0 pounds per gallon), excluding water, delivered to the coating applicator from prime and topcoat or single coat operations.

(4) Surface Coating of Large Appliances.

(a) For the purpose of this paragraph, the following definitions apply:

1. "Application Area" shall mean the area where the coating is applied by spraying, dipping, or flowcoating techniques.

2. "Single Coat" shall mean a single film of coating applied directly to the metal substrate omitting the primer application.

3. "Large Appliances" shall mean doors, cases, lids, panels, and interior support parts of residential and commercial washers, dryers, ranges, refrigerators, freezers, water heaters, dishwashers, trash compactors, air conditioners, and other similar products.

(b) This paragraph, will apply to application area(s), flashoff area(s), and oven(s) of large appliance coating lines involved in prime, single, or topcoat coating operations.

(c) This paragraph, will not apply to the use of quick-drying lacquers for repair of scratches and nicks that occur during assembly, provided that the volume of coating does not exceed 757 liters (200 gallons) in any one year.

(d) No owner or operator of a large appliance coating line subject to this paragraph, may cause, allow, or permit the discharge into the atmosphere of any VOCs in excess of 0.34 kilograms per liter of coating (2.8 pounds per gallon), excluding water, delivered to the coating applicator from prime, single, or topcoat coating operations.

(5) Automobile and Light Duty Truck Manufacturing.

(a) For the purpose of this paragraph, the following definitions apply:

1. "Application Area" shall mean the area where the coating is applied by dipping or spraying.

2. "Manufacturing Plant" shall mean a facility where automobile and truck bodies are manufactured and/or finished for eventual assembly into a finished product ready for sale to vehicle dealers. Customizer, body shops, and other repainters are not part of this definition.

3. "Automobile" shall mean all passenger cars or passenger car derivations capable of seating 12 or fewer passengers.

4. "Light-Duty Trucks" shall mean any motor vehicles rated at 3,864 kilograms (8,500 pounds) gross weight or less which are designed primarily for the purpose of transportation or are derivatives of such vehicles.

(b) This paragraph will apply to the application area(s), flashoff area(s), and oven(s) of automotive and light-duty truck manufacturing plants involved in prime, topcoat, and final repair coating operations.

(c) No owner or operator of an automobile or light-duty manufacturing plant subject to this paragraph may cause, allow, or permit the discharge into the atmosphere of any VOCs in excess of:

1. 0.23 kilograms per liter of coating (1.2 pounds per gallon), excluding water, delivered to the applicator from prime application, flashoff area, and oven operations.

2. 0.34 kilograms per liter of coating (2.8 pounds per gallon), excluding water, delivered to the applicator from surface application, flashoff area, and oven operations.

3. 0.34 kilograms per liter of coating (2.8 pounds per gallon), excluding water, delivered to the applicator from topcoat application, flashoff area, and oven operations.

4. 0.58 kilograms per liter of coating (4.8 pounds per gallon), excluding water, delivered to the applicator from final repair application, flashoff area, and oven operations.

(6) Paper Coating.

(a) For the purpose of this paragraph, the following definitions apply:

1. "Knife Coating" shall mean the application of a coating material to a substrate by means of drawing the substrate beneath a knife that spreads the coating evenly over the full width of the substrate.

2. "Paper Coating" shall mean coatings put on paper and pressure sensitive tapes regardless of substrate. Related web coating processes on plastic film and decorative coatings on metal foil are included in this definition.

3. "Roll Coating" shall mean the application of a coating material to a substrate by means of hard rubber or steel rolls.

4. "Rotogravure Coating" shall mean the application of a coating material to a substrate by means of a roll coating technique in which the pattern to be applied is etched on the coating roll. The coating material is picked up in these recessed areas and is transferred to the substrate.

(b) This paragraph will apply to roll, knife, or rotogravure coater(s) and drying ovens of paper coating lines.

(c) No owner or operator of a paper coating line subject to this paragraph may cause, allow, or permit the discharge into the atmosphere of any VOCs in excess of 0.35 kilograms per liter of coating (2.9 pounds per gallon), excluding water, delivered to the coating applicator from a paper coating line.

(7) Fabric and Vinyl Coating.

(a) For the purpose of this paragraph, the following definitions apply:

1. "Fabric Coating" shall mean the coating of a textile substrate with a knife, roll, or rotogravure coater to impart properties that are not initially present, such as strength, stability, water or acid repellancy, or appearance.

2. "Knife Coating" shall mean the application of a coating material to a substrate by means of drawing the substrate beneath a knife that spreads the coating evenly over the full width of the substrate.

3. "Roll Coating" shall mean the application of a coating material to a substrate by means of hard rubber or steel rolls.

4. "Rotogravure Coating" shall mean the application of a coating material to a substrate by means of a roll coating technique in which the pattern to be

applied is etched on the coating roll. The coating material is picked up in these recessed areas and is transferred to the substrate.

5. "Vinyl Coating" shall mean to apply a decorative or protective topcoat or printing on vinyl coated fabric or vinyl sheets.

(b) This paragraph will apply to roll, knife, or rotogravure coater(s) and drying ovens of fabric and vinyl coating lines.

(c) No owner or operator of a fabric coating line or a vinyl coating line subject to this paragraph may cause, allow, or permit discharge into the atmosphere of any VOCs in excess of;

1. 0.35 kilograms per liter of coating (2.9 pounds per gallon), excluding water, delivered to the coating applicator from a fabric coating line.

2. 0.45 kilograms per liter of coating (3.8 pounds per gallon), excluding water, delivered to the coating applicator from a vinyl coating line.

(8) Magnet Wire Coating.

(a) For the purpose of this paragraph, the following definition applies:

1. "Magnet Wire Coating" shall mean the process of applying a coating of electrically insulating varnish or enamel to aluminum or copper wire for use in electrical machinery.

(b) This paragraph will apply to oven(s) of magnet wire coating operations.

(c) No owner or operator of a magnet wire coating oven subject to this paragraph may cause, allow, or permit the discharge into the atmosphere of any VOCs in excess of 0.20 kilograms per liter of coating (1.7 pounds per gallon), excluding water, delivered to the coating applicator from magnet wire coating operations.

(9) Compliance Methods.

(a) The emission limits under this rule shall be achieved by:

1. the application of low solvent content coating technology; or

2. incineration, provided that ninety percent (90%) of the nonmethane volatile organic compounds (VOC measured as total combustible carbon) which enter the incinerator are oxidized to carbon dioxide and water; or

3. a system demonstrated to have control efficiency equivalent to or greater than provided under subparagraphs (a)1. or (a)2. of this paragraph and approved by the Director; or

(b) the design, operation, and efficiency of any capture system used in conjunction with subparagraphs (a)2. and (a)3. of this paragraph shall be certified by the owner or operator and approved by the Director.

(10) Flatwood Paneling.

(a) For the purpose of this paragraph, the following definitions apply:

1. "Class II hardboard paneling finish" shall mean finishes which meet the specifications of Voluntary Product Standard PS-59-73 as approved by the American National Standards Institute.

2. "Hardboard" shall mean a panel manufactured primarily from inter-felted ligno-cellulosic fibers which are consolidated under heat and pressure in a hot press.

3. "Hardwood plywood" shall mean plywood whose surface layer is a veneer of hardwood.

4. "Natural finish hardwood plywood panels" shall mean panels whose original grain pattern is enhanced by essentially transparent finishes frequently supplemented by fillers and toners.

5. "Thin Particleboard" is a manufactured board 1/4 inch or less in thickness made of individual wood particles which have been coated with a binder and formed into flat sheets by pressure.

6. "Printed interior panels" shall mean panels whose grain or natural surface is obscured by fillers and basecoats upon which a simulated grain or decorative pattern is printed.

7. "Tileboard" shall mean paneling that has a colored waterproof surface coating.

8. "Coating application system" shall mean all operations and equipment which apply, convey, and dry a surface coating, including, but not limited to, spray booths, flow coaters, conveyors, flashoff areas, air dryers, and ovens.

(b) This paragraph applies to all flatwood manufacturing facilities that manufacture the following products:

1. printed interior panels made of hardwood, plywood, and thin particleboard;

2. natural finish hardwood plywood panels; or

3. hardboard paneling with Class II finishes.

(c) This paragraph does not apply to the manufacture of exterior siding, tileboard, or particleboard used as a furniture component.

(d) No owner or operator of a flatwood manufacturing facility subject to this paragraph shall emit VOCs from a coating application system in excess of:

1. 2.9 kilograms per 100 square meters of coated finished product (6.0 pounds per 1,000 square feet) from printed interior panels, regardless of the number of coats applied;

2. 5.8 kilograms per 100 square meters of coated finished product (12.0 pounds per 1,000 square feet) from natural finish hardwood plywood panels, regardless of the number of coats applied; and,

3. 4.8 kilograms per 100 square meters of coated finished product (10.0 pounds per 1,000 square feet) from Class II finishes on hardboard panels, regardless of the number of coats applied.

(11) Miscellaneous Metal Parts and Products.

(a) For the purpose of this paragraph, the following definitions apply:

1. "Air dried coating" shall mean coatings which are dried by the use of air or forced warm air at temperatures up to 90 °C (194 °F).

2. "Clear coat" shall mean a coating which lacks color and opacity or is transparent and uses the undercoat as a reflectant base or undertone color.

3. "Coating application system" shall mean all operations and equipment which applies, conveys, and dries a surface coating, including, but not limited to, spray booths, flow coaters, flashoff areas, air dryers and ovens.

4. "Extreme environmental conditions" shall mean exposure to any one of the following; the weather all of the time, temperatures consistently above 95 °C (203 °F), detergents, abrasive and scouring agents, solvents, corrosive atmospheres, or similar environmental conditions.

5. "Extreme performance coatings" shall mean coatings designed for harsh exposure or extreme environmental conditions.

6. "Heat sensitive material" shall mean materials which cannot consistently be exposed to temperatures greater than 95 °C (203 °F).

7. "Low solvent coating" shall mean coatings which contain less organic solvent than the conventional coatings used by the industry. Low solvent coatings include water-borne, higher solids, electrodeposition and powder coatings.

8. "Single coat" shall mean one film of coating applied to a metal surface.

9. "Transfer efficiency" shall mean the portion of coating which adheres to the metal surface during the application process, expressed as a percentage of the total volume of coating delivered by the applicator.

(b) This paragraph applies to coating of miscellaneous metal parts and products in the following industries:

1. Large farm machinery (harvesting, fertilizing and planting machines, tractors, combines, etc.);

2. Small farm machinery (lawn and garden tractors, lawn mowers, rototillers, etc.);

3. Small appliances (fans, mixers, blenders, crock pots, dehumidifiers, vacuum cleaners, etc.);

4. Commercial machinery (office equipment, computers and auxiliary equipment, typewriters, calculators, vending machines, etc.);

5. Industrial machinery (pumps, compressors, conveyor components, fans, blowers, transformers, etc.);

6. Fabricated metal products (metal covered doors, frames, etc.); and

7. Any other industrial category which coats metal parts or products under the Standard Industrial Classification Code of Major Group 33 (primary metal industries), Major Group 34 (fabricated metal products), Major Group 35 (nonelectric machinery), Major Group 36 (electrical machinery), Major Group 37 (transportation equipment), Major Group 38 (miscellaneous instruments), and Major Group 39 (miscellaneous manufacturing industries).

(c) This paragraph does not apply to the surface coating of the following metal parts and products:

1. automobiles and light-duty trucks;

2. metal cans;

3. flat metal sheets and strips in the form of rolls or coils;

4. magnet wire for use in electrical machinery;

5. metal furniture;

6. large appliances;

7. exterior of airplanes;

8. automobile refinishing;

9. customized coating of automobiles and trucks, if production is less than 35 vehicles per day; and

10. exterior of marine vessels.

(d) This paragraph applies to the application area(s), flashoff area(s), air and forced air dryer(s) and oven(s) used in the surface coating of the metal parts and products in subparagraph (b) of this paragraph. This paragraph also applies to prime coat, top coat, and single coat operations.

(e) No owner or operator of a facility engaged in the surface coating of miscellaneous metal parts and products may operate a application system subject to this paragraph that emits VOCs in excess of:

1. 0.52 kilograms per liter (4.3 pounds per gallon) of coating, excluding water, delivered to a coating applicator that applies clear coatings;

2. 0.42 kilograms per liter (3.5 pounds per gallon) of coating, excluding water, delivered to a coating applicator in a coating application system that is air dried or forced warm air dried at temperatures up to 90 °C (194 °F);

3. 0.42 kilograms per liter (3.5 pounds per gallon) of coating, excluding water, delivered to a coating applicator that applies extreme performance coatings; and,

4. 0.36 kilograms per liter (3.0 pounds per gallon) of coating, excluding water, delivered to a coating applicator for all other coatings and coating application systems.

Author: Wm. Gerald Hardy.
Statutory Authority: Code of Alabama 1975, §§22-28-14, 22-22A-5, 22-22A-6, and 22-22A-8.
History: Effective Date: November 26, 1979.
Amended: April 19, 1984; November 21, 1996; September 7, 2000.

335-3-6-.12 Solvent Metal Cleaning.

(1) For the purpose of this rule, the following definitions apply:

(a) "Cold Cleaning" shall mean the batch process of cleaning and removing soils from metal surfaces by spraying, brushing, flushing or immersion while maintaining the solvent below its boiling point. Wipe cleaning is not included in this definition.

(b) "Conveyorized Degreasing" shall mean the continuous process of cleaning and removing soils from metal surfaces by operating with either cold or vaporized solvents.

(c) "Freeboard Height" shall mean for a cold cleaner, the distance from the liquid solvent level in the degreaser tank to the lip of the tank. For vapor degreasers, it is the distance from the solvent level in the tank to the lip of the tank.

(d) "Freeboard Ratio" shall mean the freeboard height divided by the width of the degreaser.

(e) "Open Top Vapor Degreasing" shall mean the batch process of cleaning and removing soils from metal surfaces by condensing hot solvent vapor on the colder metal parts.

(f) "Solvent Metal Cleaning" shall mean the process of cleaning soils from metal surfaces by cold cleaning or open top vapor degreasing or conveyorized degreasing.

(2) This rule will apply to cold cleaning, open top vapor degreasing and conveyorized degreasing operations.

(3) The provisions of this rule shall apply with the following exceptions:

(a) Open top vapor degreasers with an open area smaller than one square meter (10.8 square feet) shall be exempt from this rule.

(b) Conveyorized degreasers with an air/vapor interface smaller than 2.0 square meters (21.6 square feet) shall be exempt from this rule.

(4) Except as provided under paragraph (3) above, the owner or operator of a cold cleaning device shall:

(a) equip the cleaner with a cover and the cover shall be so designed that it can be easily operated with one hand; if,

1. the solvent volatility is greater than 2 kPa (15 millimeters of mercury or 0.3 pounds per square inch) measured at 38 °C (100 °F); or

2. the solvent is agitated; or

3. the solvent is heated; and

(b) equip the cleaner with a device for draining cleaned parts; and if the solvent volatility is greater than 4.3 kPa (32 millimeters of mercury or 0.6 pounds per square inch) measured at 38 °C (100 °F), equip the construct drainage device internally so that the parts are enclosed under the cover while draining, except that the drainage device may be external for applications where an internal type cannot fit into the cleaning systems; and

(c) if the solvent volatility is greater than 4.3 kPa (32 millimeters of mercury or 0.6 pounds per square inch) measured at 38 °C (100 °F) or if the solvent is heated above 50 °C (120 °F), install one of the following devices:

1. freeboard that gives a freeboard ratio greater than or equal to 0.7; or

2. water cover (solvent must be insoluble in and heavier than water); or

3. other systems of equivalent control, such as refrigerated chiller or carbon absorption, approved by the Director; and

(d) provide a permanent, conspicuous label, summarizing the operating requirements; and

(e) close the cover whenever parts are not being handled in the cleaner; and

(f) drain the cleaned parts for at least 15 seconds or until dripping ceases; and

(g) if used, supply a solvent spray that is a solid fluid stream (not a fine, atomized, or shower type spray) at a pressure which does not cause excessive splashing; and

(h) store waste solvent only in covered containers and not dispose of waste solvent or transfer it to another party, such that greater than twenty percent (20%) of the waste solvent (by weight) can evaporate into the atmosphere.

(5) Except as provided under paragraph (3) above, the owner or operator of an open top vapor degreaser shall;

(a) equip the vapor degreaser with a cover that can be opened and closed easily without disturbing the vapor zone; and

(b) provide the following safety switches:

1. a condenser flow switch and thermostat which shuts off the heat if the condenser coolant is either not circulating or too warm; and

2. Reserved.

3. a vapor level control thermostat which shuts off the heat when the level rises too high.

(c) install one of the following control devices:

1. a freeboard ratio of greater than or equal to 0.75 and a powered or mechanically assisted cover if the degreaser opening is greater than 1 square meter (10.8 square feet); or

2. refrigerated chiller; or

3. enclosed design (cover or door opens only when the dry part is actually entering or exiting the degreaser); or

4. carbon adsorption system, with ventilation greater than or equal to 15 cubic meters per minute per square meter (50 cubic feet per minute per square

foot) of air/vapor area (when cover is open) and exhausting less than 25 parts per million of solvent averaged over one complete adsorption cycle; or

5. a control system, demonstrated to have control efficiency equivalent to or greater than any of the above and approved by the Director; and

(d) keep the cover closed at all times except when processing work loads through the degreaser; and

(e) minimize solvent carryout by:

1. racking parts to allow complete drainage; and

2. moving parts in and out of the degreaser at less than 3.3 meters per minute (11 feet per minute); and

3. holding the parts in the vapor zone at least 30 seconds or until condensation ceases; and

4. tipping out any pools of solvent on the cleansed parts before removal from the vapor zone; and

5. allowing parts to dry within the degreaser for at least 15 seconds or until visually dry; and

(f) not degrease porous or absorbent materials, such as cloth, leather, wood or rope; and

(g) not occupy more than half of the degreaser's open top area with a workload; and

(h) Reserved.

(i) always spray below the vapor level; and

(j) repair solvent leaks immediately, or shutdown the degreaser; and

(k) store waste solvent only in covered containers and not dispose of waste solvent or transfer it to another party, such that greater than twenty percent (20%) of the waste solvent (by weight) can evaporate into the atmosphere; and

(l) not operate the cleaner so as to allow water to be visually detectable in solvent existing in the water separator; and

(m) not use ventilation fans near the degreaser opening nor provide exhaust ventilation exceeding 20 cubic meters per minute per square meter (65 cubic feet per minute per square foot) of degreaser open area, unless necessary to meet OSHA requirements.

(6) Except as provided under paragraph (3) above, the owner or operator of a conveyorized degreaser shall:

(a) not use workplace fans near the degreaser opening nor provide exhaust ventilation exceeding 20 cubic meters per minute per square meter (65 cubic feet per minute per square foot) of degreaser opening, unless necessary to meet OSHA requirements; and

(b) install one of the following control devices:

1. refrigerated chiller; or

2. carbon adsorption system with ventilation greater than or equal to 15 cubic meters per minute per square meter (50 cubic feet per minute per square foot) or air/vapor area (when downtime covers are open), and exhausting less than 25 parts per million of solvent by volume averaged over a complete adsorption cycle; or

3. a system demonstrated to have a control efficiency equivalent to or greater than subparagraphs (b)1. or)(b)2. of this paragraph and approved by the Director; and

(c) equip the cleaner with equipment, such as drying tunnel or rotating (tumbling) basket sufficient to prevent cleaned parts from carrying out solvent liquid or vapor; and

(d) provide the following safety switches:

1. a condenser flow switch and thermostat which shut off the heat if the condenser is either not circulating or too warm; and

2. a spray safety switch which shuts off the spray pump or the conveyor if the vapor level drops more than 10 centimeters (4 inches) below the bottom of the condenser; and

3. a vapor level control thermostat which shuts off the heat when the level rises too high; and

(e) minimize openings during operation so that entrances and exits will silhouette workloads with an average clearance between the parts and the edge of the degreaser opening of less than ten centimeters (4 inches) or less than ten percent (10%) of the width of the opening; and

(f) provide downtime covers for closing off the entrance and exit during the shutdown hours; and

(g) minimize carryout emissions by:

1. racking parts for best drainage; and

2. maintaining the vertical conveyor speed at less than 3.3 meters per minute (11 feet per minute); and

(h) store waste solvent only in covered containers; and

(i) repair solvent leaks immediately, or shut down the degreasers; and

(j) not operate the cleaner so as to allow water to be visually detectable in solvent exiting the water separator; and

(k) place downtime covers over entrances and exits of conveyorized degreasers immediately after the conveyors and exhaust are shut down and not remove them until just before start-up.

Author: Wm. Gerald Hardy.
Statutory Authority: Code of Alabama 1975, §§22-28-14, 22-22A-5, 22-22A-6, and 22-22A-8.
History: Effective Date: November 26, 1979.
Amended: March 24, 1981; November 21, 1996.

335-3-6-.13 Cutback Asphalt.

(1) For the purpose of this rule, the following definitions apply:

(a) "Asphalt" shall mean a dark brown to black cementitious material (solid, semisolid, or liquid in consistency) in which the predominating constituents are bitumens which occur in nature as such or which are obtained as residue in refining petroleum.

(b) "Cutback Asphalt" shall mean asphalt cement which has been liquefied by blending with petroleum solvents (diluents). Upon exposure to atmospheric conditions, the diluents evaporate, leaving the asphalt cement to perform its function.

(c) "Penetrating Prime Coat" shall mean an application of low-viscosity liquid asphalt to an absorbent surface. It is used to prepare an untreated base for an asphalt surface. The prime penetrates the base and plugs the voids, hardens the top, and helps bind it to the overlying asphalt layer.

(2) This rule will apply to the manufacture and use of cutback asphalts in highway paving and maintenance operations in Mobile, Russell, Madison and Morgan counties.

(a) After June 1, 1980, no person may cause, allow, or permit the sale or offering for sale, mixing, storage, use, or application of cutback asphalts without approval of the Director as provided in subparagraph (b) of this paragraph below.

(b) The Director may approve the sale or offering for sale, mixing, storage, use, or application of cutback asphalts where:

1. long-time stockpile storage is necessary; or

2. the use or application commences on or after November of any year and such use or application is completed by February of the following year; or

3. the cutback asphalt is to be used solely as a penetrating prime coat.

Author: Wm. Gerald Hardy.
Statutory Authority: Code of Alabama 1975, §§22-28-14, 22-22A-5, 22-22A-6, and 22-22A-8.
History: Effective Date: November 26, 1979.
Amended: June 9, 1987; November 21, 1996.

335-3-6-.14 Petition for Alternative Controls.

(1) Notwithstanding any requirements of rules 335-3-6-.02 through 335-3-6-.13 of this chapter, an owner or operator may petition the Director for permission to use alternative operational and/or control techniques for any emission point subject to the requirements of this chapter, if each of the following requirements is satisfied:

(a) the petition is submitted within 3 months of EPA approval; and

(b) the petition demonstrates to the satisfaction of the Director that the reduction in VOC emissions achieved through use of the alternative technique is equivalent to that which would be expected from compliance with the applicable regulations.

(2) Notwithstanding any requirements of rules 335-3-6-.02 through 335-3-6-.13, an owner or operator may petition the Director for permission to substitute reductions in emissions for those regulated source categories below those required by these regulations for increase in emissions above allowable limits (compliance is to be determined on a plant-wide basis, using a weekly weighted average) for the emission reductions required by these regulations, if each of the following requirements are satisfied:

(a) the petition is submitted within 3 months of EPA approval;

(b) the petition demonstrates to the satisfaction of the Director that sufficient additional reduction in VOC emissions not required by the regulations will be achieved to assure that the aggregate reduction in VOC emissions is no less than the reductions in emission which would be expected for compliance with the regulations.

(3) Alternative Control Technology.

(a) Notwithstanding any requirement of rules 335-3-6-.02 through 335-3-6-.13, sources unable to achieve the levels of control specified in this chapter on a technical or economic basis may petition the Director for permission on a case-by-case basis to establish the applicable reasonably available control technology.

(b) Any such change to the applicable reasonably available control technology will not be effective until it becomes a part of the approved State Implementation Plan.

Author: Wm. Gerald Hardy.
Statutory Authority: Code of Alabama 1975, §§22-28-14, 22-22A-5, 22-22A-6, and 22-22A-8.
History: Effective Date: November 26, 1979.
Amended:

335-3-6-.15 Compliance Schedules.

(EPA approval as used herein means final approval of this chapter as part of the State Implementation Plan.)

(1) Process and Emission Control Equipment Installations.

(a) Except as provided under paragraphs (4) or (5) of this rule, the owner or operator of a VOC emission source proposing to install and operate VOC emission control equipment and/or replacement process equipment to comply with this chapter shall adhere to the increments of progress contained in the following schedule:

1. Final plans for the emission control system and/or process equipment must be submitted within three (3) months of EPA approval;

2. Contracts for the emission control system and/or process equipment must be awarded or orders must be issued for purchase of component parts to accomplish emission control within six (6) months of EPA approval;

3. Initiation of on-site construction or installation of the emission control and/or process equipment must begin within nine (9) months of EPA approval;

4. On-site construction or installation of the emission control and/or process equipment must be completed within fifteen (15) months of EPA approval;

5. Final compliance shall be achieved within sixteen (16) months of EPA approval.

(b) Any owner or operator of an emission source subject to the compliance schedule of this rule shall certify to the Director in five (5) days after

the deadline for each increment of progress, whether the required increment of progress has been met.

(2) Low Solvent Content Coating.

(a) Except as provided under paragraphs (4) or (5) of this rule or under subparagraph (b) of this paragraph, the owner or operator of a VOC emission source proposing to employ low solvent content coating technology to comply with this chapter shall adhere to the increments of progress contained in the following schedules:

1. Final plans for the application of low solvent content coating technology must be submitted within three (3) months of EPA approval;

2. Research and development of low solvent content coating must be completed within six (6) months of EPA approval;

3. Evaluation of product quality and commercial acceptance must be completed within one (1) year of EPA approval;

4. Purchase orders must be issued for low solvent content coatings and process modifications within fifteen (15) months of EPA approval;

5. Initiation of process modification must begin within seventeen (17) months of EPA approval;

6. Process modifications must be completed and use of low solvent content coatings must begin within twenty-two (22) months of EPA approval;

7. Final compliance shall be achieved within two (2) years of EPA approval.

(b) Where the Director determines that low solvent content coating technology has been sufficiently researched and developed for a particular application, the owner or operator of a VOC emission source proposing to comply with this chapter through application of low solvent content coatings shall adhere to the increments of progress contained in the following schedule:

1. Final plans for the application of low solvent content coating technology must be submitted within three (3) months of EPA approval;

2. Evaluation of product quality and commercial acceptance must be completed within six (6) months of EPA approval;

3. Purchase orders must be issued for low solvent content coatings and process modifications within nine (9) months of EPA approval;

4. Initiation of process modifications must begin within eleven (11) months of EPA approval;

5. Process modifications must be completed and use of low solvent content coatings must begin within fifteen (15) months of EPA approval;

6. Final compliance shall be achieved within sixteen (16) months of EPA approval.

(c) Any owner or operator of a stationary source subject to the compliance schedule of this paragraph shall certify to the Director within five (5) days after the deadline for each increment of progress whether the required increment of progress has been met.

(3) Equipment Modification.

(a) Except as provided under paragraphs (4) or (5) of this rule, the owner or operator of a VOC emission source proposing to comply with this chapter by modification of existing processing equipment shall adhere to the increments of progress contained in the following schedule:

1. Final plans for process modification must be submitted within three (3) months of EPA approval;

2. Contracts for process modifications must be awarded or orders must be issued for the purchase of component parts to accomplish process modifications within five (5) months of EPA approval;

3. Initiation of on-site construction or installation of process modifications must begin within seven (7) months of EPA approval;

4. On-site construction or installation of process modifications must be completed within ten (10) months of EPA approval;

5. Final compliance shall be achieved within eleven (11) months of EPA approval.

(b) Any owner or operator of an emission source subject to the compliance schedule of this rule shall certify to the Director within five (5) days after the deadline for each increment of progress, whether the required increment of progress has been met.

(4) Alternative Compliance.

(a) Nothing in this rule shall prevent the Director from approving a separate schedule for any source, if he finds that the application of a compliance schedule in paragraphs (1) through (3) above would be infeasible or impracticable.

(b) Nothing in this rule shall prevent the owner or operator of a VOC source from submitting to the Director a proposed alternative compliance schedule provided:

1. the proposed alternative compliance schedule is submitted within three (3) months of EPA approval; and

2. the final control plans for achieving compliance with this chapter are submitted simultaneously; and

3. the alternative compliance schedule contains the same increments of progress as the schedule for which it is proposed; and

4. sufficient documentation and certification from appropriate suppliers, contractors, manufacturers, or fabricators are submitted by the owner or operator of the VOC source to justify the dates proposed for the increments of progress.

(c) All alternative compliance schedules proposed or promulgated under this rule shall provide for compliance of the VOC emission source with this chapter as expeditiously as practicable, but not later than December 31, 1982.

(d) Any schedule approved under this paragraph may be revoked at any time if the source does not meet the increments of progress stipulated.

(5) Exception. Paragraphs (1) through (4) of this rule will not apply to sources which are in compliance with this chapter before June 1, 1979 and have determined and certified compliance to the satisfaction of the Director within three (3) months of EPA approval.

(6) Exception. Nothing in this rule shall prevent the Director from approving a separate schedule for any source beyond December 31, 1982, provided:

(a) the source is located in an attainment or unclassifiable area, and

(b) the source is proposing to use innovative technologies, and

(c) the extension will not interfere with reasonable further progress in attaining the National Ambient Air Quality Standard.

Author: Wm. Gerald Hardy.
Statutory Authority: Code of Alabama 1975, §§22-28-14, 22-22A-5, 22-22A-6, and 22-22A-8.
History: Effective Date: November 26, 1979.
Amended: November 21, 1996.

335-3-6-.16 Test Methods and Procedures.

(1) Determination of Volatile Organic Content of Surface Coatings.

(a) This method applies to paint, varnish, lacquer, and surface coatings which are air-dried or force-dried.

(b) This method does not apply to any coating system requiring a special curing process such as:

1. exposure to temperatures in excess of 110 °C (230 °F) to promote thermal cross-linking; or

2. exposure to ultraviolet light to promote cross-linking.

(c) For the purposes of this method, the applicable surface coatings are divided into three classes. They are:

1. Class I: General Solvent-Type Paints. This class includes white linseed oil outside paint, white soya and phthalic alkyd enamel, white linseed o-phthalic alkyd enamel, red lead primer, zinc chromate primer, flat white inside enamel, white epoxy enamel, white vinyl toluene modified alkyd, white amino modified baking enamel, and other solvent-type paints not included in Class II.

2. Class II: Varnishes and Lacquers. This class includes clear and pigmented lacquers and varnishes.

3. Class III: Water Thinned Paints. This class includes emulsion or latex paints and colored enamels.

(d) For the purposes of this method, a representative sample of the surface coating shall be obtained at the point of delivery to the coater or any other point in the process that the Director approves.

(e) The volatile organic content of the sample shall be determined as follows:

1. Assign the coating to one of the three classes in subparagraph (c) of this paragraph. Assign any coating not clearly belonging to Class II or III to Class I.

2. Determine the density Dm (in grams/cubic centimeter) of the paint, varnish, lacquer, or related product according to the procedure outlined in ASTM 1475-60, Standard Method of Test for density of Paint, Varnish, Lacquer, and Related Products. Then, depending on the class of the coatings, use one of the following specified procedures to determine the volatile content:

(i) Class I. Use the procedure in ASTM 2369-73, Standard Method of Test for Volatile Content of Paints.

(I) Record the following information:

W_1 = Weight of dish and sample, grams

W_2 = Weight of dish and sample after heating, grams

S = Sample weight, grams.

(II) Compute the volatile organic content C_v (in grams/liter of paint) as follows:

$$C_v = \frac{(W_1 - W_2)(Dm)(10^3)}{S}$$

(III) To convert grams/liter to pounds/gallons, multiply C_v by 8.3455×10^{-3}.

(ii) Class II. Use the procedure in ASTM D 1644-59 Method A, Standard Methods of Test for Nonvolatile Content of Varnishes (Do not use Method B).

(I) Record the following information:

A = Record of dish, grams

B = Weight of sample used, grams

C = Weight of dish and content after heating, grams.

(II) Compute the volatile organic content C_v (in grams/liter) as follows:

$$C_v = \frac{(A + B + C)(Dm)(10^3)}{B}$$

(III) To convert grams/liter to pounds/gallon, multiply C_v by 8.3455×10^{-3}.

(iii) Class III. Use the procedure in ASTM D 2369-73, Standard Method of Test for Volatile Content of Paints.

(I) Record the same information as specified in subparagraph (e)2.(i) of this paragraph.

(II) Determine the water content P (in percent water) of the paint according to the procedure outlined in Federal Standards 141a, Method 4082.1, Water in Paint and Varnishes (Karl Fisher Titration Method).

(III) Compute the nonaqueous volatile matter content C_v (in grams/liter) as follows:

$$C_v = \frac{(W_1 - W_2 - 0.01PS)(Dm)(10^3)}{S}$$

(IV) To convert grams/liter to pounds/gallon, multiply C_v by 8.3455×10^{-3}.

(2) Test Procedure for Determination of VOC Emissions from Bulk Gasoline Terminals.

(a) Principle. VOC mass emissions are determined directly using flow meters and hydrocarbon analyzers. The volume of liquid gasoline dispensed is determined by computation based on the metered quantity of gasoline at the loading rack. Test results are expressed in milligrams of hydrocarbons emitted per liter of gasoline transferred.

(b) Summary of the Method. This method describes the test conditions and test procedures to be followed in determining the emissions from systems installed to control VOC vapors resulting from tank truck and trailer loading operations at bulk terminals. Under this procedure direct measurements are made to compute the hydrocarbon mass exhausted from the vapor control system. All possible sources of leaks are qualitatively checked to ensure that no uncontrolled vapors are emitted to the atmosphere. The results are expressed in terms of mass hydrocarbons emitted per unit volume of gasoline transferred. Emissions are determined on a total hydrocarbon basis. If methane is present in the vapors returned from the tank trucks or trailers, provisions are included for conversion to a total nonmethane hydrocarbon basis.

(c) Applicability. This method is applicable to determining VOC emission rates at tank truck and trailer gasoline loading terminals employing vapor collection systems and either continuous or intermittent vapor control systems. This method is applicable to motor tank truck and trailer loading only as per rule 335-3-6-.06.

(d) Apparatus. The components essential to the evaluation of emissions from gasoline loading terminals are:

1. portable combustible gas detector equipped to read zero (0) to one hundred percent (100%) of the lower explosive limit,

2. flexible thermocouple with recorder,

3. gas volume meter, sized for the expected exhaust flow rate and range,

4. total hydrocarbon analyzer with recorder (flame ionization detector or nondispersive infrared equipped to read zero (0) to ten percent (10%) by volume hydrocarbon as propane for vapor control systems which recover the vapor liquid, or 0 to 10,000 ppmv hydrocarbon as propane for incineration vapor control system),

5. barometer to measure atmospheric pressure,

6. gas chromatography/flame ionization detector with a column to separate C1 - C7 alkanes (used if methane is present in recovered vapors or if incineration is the vapor control technique).

(e) Test Requirements:

1. No less than three 8-hour repetitions will be performed.

2. During the test period, all loading racks shall be open for each produce line which is controlled by the system under test. Simultaneous use of more than one loading rack shall occur to the extent that such would normally occur.

3. Simultaneous use of more than one dispenser on each loading rack shall occur to the extent that such use would normally occur.

4. Dispensing rates shall be set at the maximum rate at which the equipment is designed to be operated. Automatic product dispensers are to be used according to normal operating practices.

5. Applicable operating parameters of the vapor control system shall be monitored to demonstrate that the control unit is operating at design levels. For intermittent vapor control systems employing a vapor holder, each test repetition shall include at least one fully automatic operation cycle of the vapor holder and control device. Tank trucks and trailers shall be essentially leak free as determined by the Director.

(f) Basic Measurements Required. The basic measurements essential to the evaluation of emissions from gasoline loading terminals are:

1. the amount of gasoline dispensed from gasoline dispensers,

2. leak check of all fittings and vents,

3. the following items for the processing unit exhaust:

(i) temperature,

(ii) pressure,

(iii) volume of vapors,

(iv) hydrocarbon concentration of vapors, if methane is present, in recovered vapors.

(g) Test Procedure.

1. Calibrate and span all instruments as outlined under subparagraph (i) of this paragraph.

2. Install an appropriately sized gas meter on the exhaust vent of the vapor control system. For those vapor control systems where restrictions preclude the use of a volume meter or when incineration is used for vapor control, a gas flow rate meter (orifice, pitot tube, annubar, etc.) is necessary. At the meter inlet, install a thermocouple with recorder. Install a tap at the volume meter outlet. Attach a sample line for total hydrocarbon analyzer (0 to 10 percent) as propane to this tap. If the meter pressure is different than barometric pressure, install a second tap at the meter outlet and attach an appropriate manometer for pressure measurement. If methane analysis is required, install a third tap for connection to a constant volume sample pump/evacuated bag assembly as described in 40 CFR 36.247, Method 3, December 23, 1977.

3. Measurements and data required for evaluating emissions from the system:

(i) at the beginning and end of each test repetition, record the volume readings on each product dispenser on each loading rack served by the system under test;

(ii) at the beginning of each test repetition and each two (2) hours thereafter, record the ambient temperature and the barometric pressure;

(iii) for intermittent vapor control systems employing a vapor holder, the unit shall be manually started and allowed to process vapors in the holder until the lower automatic cut-off is reached. This cycle should be performed immediately prior to the beginning of the test repetition before readings under subparagraph (g)3.(i) of this paragraph are taken. No loading shall be in progress during this manual cycle;

(iv) for each cycle of the vapor control system during each test repetition, record the start and stop time, the initial and final gas meter readings, and the average vapor temperature, pressure and hydrocarbon concentration. If a flow rate meter is used, record flow meter readouts continuously during the cycle. If required, extract a sample continuously during each cycle for chromatographic analysis for specific hydrocarbons;

(v) for each tank truck or trailer loading during the test period, check all fittings and seals on the tanker compartments with the combustible gas detector. Record the maximum combustible gas reading for any incidents of leakage of hydrocarbon vapors. Explore the entire periphery of the potential leak source with the sample hose inlet 1 cm (0.4 inches) away from the interface;

(vi) during each test period, monitor all possible sources of leaks in the vapor collection and control systems with the combustible gas indicator. Record the location and combustible gas reading for any incidents of leakage;

(vii) for intermittent vapor control systems, the control unit shall be manually started and allowed to process vapors in the holder until the lower automatic shutoff is reached at the end of each test repetition. Record the data required under subparagraph (g)3.(iv) of this paragraph for this manual cycle. No loading shall be in progress during this manual cycle.

(h) Calculations.

1. Terminology:

T_a = Ambient temperature (°C)

P_b = Barometric pressure (mm Hg)

L_t = Total volume of liquid dispensed from all controlled racks during the test period (liters)

V_e = Volume of air-hydrocarbon mixture exhausted from the processing unit (m^3)

V_{es} = Normalized volume of air-hydrocarbon mixture exhausted NM^3 @ 20 °C, 760 mm Hg

C_e = Volume fraction of hydrocarbons in exhausted mixture (volume % as C_3H_8/100, corrected for methane content if required)

T_e = Temperature at processing unit exhaust (°C)

P_e = Pressure at processing unit exhaust (mm Hg abs)

$(M/L)_e$ = Mass of hydrocarbons exhausted from the processing unit per volume of liquid loaded (mg/1).

2. Calculate the following results for each period of the vapor control system operation:

(i) Volume of air-hydrocarbon mixture exhausted from the vapor control system:

$$V_e = V_{ef} - V_{ei} \text{; or}$$

V_e = total volume from flow rate and time records

(ii) normalized volume of exhausted mixture:

$$V_{es} = \frac{(0.3858\ ^{\circ}K / mm\ Hg) V_e P_e}{(T_e + 273.2)}$$

(iii) mass of hydrocarbons exhausted from the vapor control system:

$$M_e = \frac{(1.833 \times 10^6 mg\ C_3H_8)}{NM^3} \times V_{es} C_e$$

3. calculate the average mass of hydrocarbons emitted per volume of gasoline loaded:

$$(M / L)_e = \frac{M_e}{L_t}$$

(i) Calibrations.

(I) Flow meters shall be calibrated using standard methods and procedures which have been approved by the Director.

(II) Temperature recording instruments shall be calibrated prior to a test period and following the test period using an ice bath (0 °C) and a known reference temperature source of about 35 °C. Daily during the test period, use an accurate reference to measure the ambient temperature and compare the ambient temperature reading of all other instruments to this value.

(III) Manufacturer's instructions concerning warm-up and adjustments shall be followed for total hydrocarbon analyzers. Prior to and immediately after the emission test, perform a comprehensive laboratory calibration on each analyzer used. Calibration gases should be propane in nitrogen prepared gravimetrically with mass quantities of approximately one hundred percent (100%) propane. A calibration curve shall be provided using a minimum of five (5) prepared standards in the range of concentrations expected during testing;

I. For each repetition, zero with zero gas (3 ppm C) and span with seventy percent (70%) propane for instruments used in the vapor lines and with ten percent (10%) propane for instruments used at the vapor control system exhaust.

II. The zero and span procedure shall be performed at least once prior to the first test measurements, once during the middle of the run, and once following the final test measurement for each run.

III. Conditions in calibration gas cylinders must be kept such that condensation of propane does not occur. A safety factor of two (2) for pressure

and temperature is recommended.

(3) Determination of Volatile Organic Compound Emission Control System Efficiency.

(a) The provisions of this paragraph are generally applicable to any test method employed to determine the collection or control efficiency of any device or system designed, installed, and operated for the purpose of reducing volatile organic compound emissions.

(b) The following procedures shall be included in any efficiency demonstration:

1. The volatile organic compound containing material shall be sampled and analyzed in a manner approved by the Director such that the quantity of emissions that could result from the use of the material can be quantified.

2. The efficiency of any capture system used to transport the volatile organic compound emissions from their point of origination to the control equipment shall be computed by using accepted engineering practice and in a manner approved by the Director.

3. Samples of the volatile organic compound containing gas stream shall be taken simultaneously at the inlet and outlet of the emissions control device in a manner approved by the Director.

4. The total combustible carbon content of the samples shall be determined by a method approved by the Director.

5. The efficiency of the control device shall be expressed as the fraction of total combustible carbon content reduction achieved.

6. The volatile organic compound mass emission rate shall be the sum of emissions from the control device, emissions not collected by the capture system, and capture system losses.

(4) Determination of Solvent Metal Cleaning Volatile Organic Compound Emissions.

(a) This method is applicable to determining volatile organic compound emissions from solvent metal cleaning equipment.

(b) The purpose of this method is to quantify, by material balance, the amount of solvent input into a degreaser over a sufficiently long period of time so that an average emission rate can be computed.

(c) The following procedure shall be forwarded to perform a material balance test:

1. Clean the degreaser sump before testing.

2. Record the amount of solvent added to the tank with a flow meter.

3. Record the weight and type of work load degreased each day.

4. At the end of the test run, pump out the used solvent and measure the amount with a flow meter. Also, estimate the volume of metal chips and other material remaining in the emptied sump, if significant.

5. Bottle a sample of the used solvent and analyze it to find the percent that is oil and other contaminants. The oil and solvent proportions can be estimated by weighing samples of used solvent before and after boiling off the solvent. Compute the volume of oils in the used solvent. The volume of solvent displaced by this oil along with the volume of make-up solvent added during operations are equal to the solvent emission.

(5) Reserved.

(6) Testing and Monitoring Procedures for Graphic Arts.

(a) The owner or operator of a VOC source shall, at his own expense, demonstrate compliance with this chapter by the methods in subparagraph (c) of this paragraph or an alternative method approved by the Director. All tests shall be made by, or under the direction of, a person qualified by training and/or experience in the field of air pollution testing.

(b) A person proposing to conduct a VOC emissions test shall notify the Director of the intent to test not less than thirty (30) days before the proposed initiation of the tests so the Director may at his option observe the test. The notification shall contain the information required by, and be in a format approved by, the Director.

(c) Test procedures to determine compliance with chapter 335-3-6 must be approved by the Director and consistent with:

1. EPA Guideline Series document, "Measurement of Volatile Organic Compounds", EPA-450/2-78-041; and

2. Appendix A of "Control of Volatile Organic Emissions from Existing Stationary Sources - Volume II: Surface Coating of Cans, Coils, Paper, Fabrics, Automobiles, and Light-Duty Trucks", EPA-450/2-77-008.

(d) The Director may accept, instead of ink solvent analysis, a certification by the ink manufacturer of the composition of the ink solvent, if supported by actual batch formulation records.

(e) If add-on control equipment is used, continuous monitors of the following parameters shall be installed, periodically calibrated, and operated at all times that the associated control equipment is operating:

1. exhaust gas temperatures of all incinerators;

2. temperature rise across a catalytic incinerator bed;

3. breakthrough of VOC on a carbon adsorption unit; and,

4. any other continuous monitoring or recording device required by the Director.

(7) Testing and Monitoring Procedures for Surface Coating of Miscellaneous Metal Parts.

(a) The owner or operator of a VOC source required to comply with this chapter shall, at his own expense, demonstrate compliance by the methods of this paragraph, or an alternative method approved by the Director. All tests shall be made by, or under the direction of, a person qualified by training and/or experience in the field of air pollution testing.

(b) A person proposing to conduct a VOC emissions test shall notify the Director of the intent to test not less than thirty (30) days before the proposed initiation of the tests so the Director may at his option observe the test. The notification shall contain the information required by, and be in a format approved by, the Director.

(c) Test procedures to determine compliance with chapter 335-3-6 must be approved by the Director and be consistent with:

1. EPA Guideline Series document, "Measurement of Volatile Organic Compounds", EPA-450/2-78-041; and,

2. Appendix A of "Control of Volatile Organic Emissions from Existing Stationary Sources - Volume II: Surface Coating of Cans, Coils, Paper, Fabrics, Automobiles, and Light-Duty Trucks", EPA-450/2-77-008.

(d) The Director may accept, instead of the coating analysis required in subparagraph (c)2. of this paragraph, a certification by the manufacturer of the composition of the coatings, if supported by actual batch formulation records.

(e) If add-on control equipment is used, continuous monitors of the following parameters shall be installed, periodically calibrated, and operated at all times that the associated control equipment is operating:

1. exhaust gas temperature of all incinerators;

2. temperature rise across a catalytic incinerator bed;

3. breakthrough of VOC on a carbon adsorption unit; and

4. any other continuous monitoring or recording device required by the Director.

(8) Testing and Monitoring Procedures for Petroleum Liquid Storage in Floating Roof Tanks.

(a) The owner or operator of any VOC source required to comply with this chapter shall, at his own expense, demonstrate compliance by the methods of this paragraph or an alternative method approved by the Director. All tests shall be made by, or under the direction of, a person qualified by training and/or experience in the field of air pollution testing.

(b) A person proposing to conduct a VOC emissions test shall notify the Director of the intent to test not less than thirty (30) days before the proposed initiation of the tests so the Director may at his option observe the test. The notification shall contain the information required by, and be in a format approved by, the Director.

(c) Compliance with chapter 335-3-6 shall be determined by:

1. physically measuring the length and width of all gaps around the entire circumference of the secondary seal in each place where a 0.32 centimeter (1/8 inch) uniform diameter probe passes freely (without forcing or binding against the seal) between the seal and tank wall; and,

2. summing the area of the individual gaps.

(9) Testing and Monitoring Procedures for the Manufacture of Pneumatic Rubber Tires.

(a) The owner or operator of a VOC source required to comply with this chapter shall, at his own expense, demonstrate compliance by the methods of subparagraphs (c) and (d) of this paragraph, or an alternative method approved by the Director. All tests shall be made by, or under the direction of, a person qualified by training and/or experience in the field of air pollution testing.

(b) A person proposing to conduct a VOC emissions test shall notify the Director of the intent to test not less than thirty (30) days before the proposed initiation of the tests so the Director may, at his option, observe the test. The notification shall contain the information required by, and be in a format approved by, the Director.

(c) Test procedures to determine compliance with chapter 335-3-6 must be approved by the Director and be consistent with:

1. EPA Guideline Series document, "Measurement of Volatile Organic Compounds", EPA-450/2-78-041; and,

2. Appendix A of "Control of Volatile Organic Emissions from Existing Stationary Sources - Volume II: Surface Coating of Cans, Coils, Paper, Fabrics, Automobiles, and Light-Duty Trucks", EPA-450/2-77-008.

(d) The Director may accept, instead of the analyses of spray, cement, or other compounds, a certification by the manufacturer of the composition of the spray, cement, or other compounds, if supported by actual batch formulation records.

(e) If add-on control equipment is used, continuous monitors of the following parameters shall be installed, periodically calibrated, and operated at all times that the associated control equipment is operating:

1. exhaust gas temperatures of incinerators;

2. temperature rise across a catalytic incinerator bed;

3. breakthrough of VOC on a carbon adsorption unit; and,

4. any other continuous monitoring or recording device required by the Director.

(10) Testing and Monitoring Procedures for the Manufacture of Synthesized Pharmaceutical Products.

(a) The owner or operator of any VOC source required to comply with this chapter shall, at his own expense, demonstrate compliance by the methods of subparagraph (c) of this paragraph or an alternative method approved by the Director. All tests shall be made by, or under the direction of, a person qualified by training and/or experience in the field of air pollution testing.

(b) A person proposing to conduct a VOC emissions test shall notify the Director of the intent to test not less than thirty (30) days before the proposed initiation of the tests so the Director may, at his option, observe the test. The notification shall contain the information required by, and in a format approved by, the Director.

(c) Test procedures to determine compliance with chapter 335-3-6 must be approved by the Director and consistent with EPA Guideline Series document, "Measurement of Volatile Organic Compounds", EPA-450/2-78-041.

(d) If add-on control equipment is used, continuous monitors of the following parameters shall be installed, periodically calibrated, and operated at all times that the associated control equipment is operating:

1. exhaust gas temperature of all incinerators;

2. temperature rise across a catalytic incinerator bed;

3. breakthrough of VOC on a carbon adsorption unit; and,

4. any other continuous monitoring or recording device required by the Director.

(11) Testing and Monitoring Procedures for the Surface Coating of Flatwood Paneling.

(a) The owner or operator of a VOC source required to comply with this chapter shall, at his own expense, demonstrate compliance by the methods of subparagraphs (c) and (d) of this paragraph or an alternative method approved by the Director. All tests shall be made by, or under the direction of, a person qualified by training and/or experience in the field of air pollution testing.

(b) A person proposing to conduct a VOC emissions test shall notify the Director of the intent to test not less than thirty (30) days before the proposed initiation of the tests so the Director may, at his option, observe the test. The notification shall contain the information required by, and be in a format approved by, the Director.

(c) Test procedures to determine compliance with chapter 335-3-6 must be approved by the Director and be consistent with:

1. EPA Guideline Series document, "Measurement of Volatile Organic Compounds", EPA-450/2-78-041; and,

2. Appendix A of "Control of Volatile Organic Emissions from Existing Stationary Sources - Volume II: Surface Coating of Cans, Coils, Paper, Fabrics, Automobiles, and Light-Duty Trucks", EPA-450/2-77-008.

(d) The Director may accept, instead of the coating analysis required by subparagraph (c)2. of this paragraph above, a certification by the coating manufacturer of the composition of the coating, if supported by actual batch formulation records.

(e) If add-on control equipment is used, continuous monitors of the following parameters shall be installed, periodically calibrated, and operated at all times that the associated control equipment is operating:

1. exhaust gas temperature of all incinerators;

2. temperature rise across a catalytic incinerator bed;

3. breakthrough of VOC on a carbon adsorption unit; and,

4. any other continuous monitoring or recording device required by the Director.

(12) Testing and Monitoring Procedures for Leaks from Gasoline Tank Trucks and Vapor Collection Systems.

(a) The owner or operator of a VOC source shall, at his own expense, demonstrate compliance with rule 335-3-6-.20 by the methods of subparagraph (c) of this paragraph or an alternative method approved by the Director. All

tests shall be made by, or under the direction of, a person qualified by training and/or experience in the field of air pollution testing.

(b) The owner or operator of a gasoline tank truck subject to chapter 335-3-6 must notify the Director in writing of the date and location of a certification test at least ten (10) days before the anticipated test date. In order to observe a certification test, the Director may postpone or reschedule the certification test date by written notice to the owner or operator within five (5) days after receipt of certification test notification.

(c) Test methods and procedures shall be consistent with one of the following methods and procedures:

1. Reference Method 27.

2. EPA Guideline Series document, "Control of Volatile Organic Compound Leaks from Gasoline Tank Trucks and Vapor Collection Systems", EPA-450/2-78-051.

(13) Testing and Monitoring Procedures for Petroleum Refinery Equipment.

(a) The owner or operator of a petroleum refinery subject to this chapter shall, at his own expense, demonstrate compliance by the methods of this paragraph or an alternative method approved by the Director. All tests shall be made by, or under the direction of a person qualified by training and/or experienced in the field of air pollution testing.

(b) Testing and monitoring procedures to determine compliance with this chapter must be approved by the Director and consistent with Appendix B of the OAQPS Guideline Series document, "Control of Volatile Organic Compound Leaks from Petroleum Refinery Equipment", EPA-450/2-78-036.

Author: Wm. Gerald Hardy.
Statutory Authority: Code of Alabama 1975, §§22-28-14, 22-22A-5, 22-22A-6, and 22-22A-8.
History: Effective Date: November, 26, 1979.
Amended: April 19, 1984; November 1, 1990; November 21, 1996; September 25, 1997; September 7, 2000.

335-3-6-.17 Manufacture of Pneumatic Rubber Tires.

(1) For the purpose of this rule, the following definitions apply:

(a) "Pneumatic rubber tire manufacture" shall mean the production of pneumatic rubber, passenger type tires on a mass production basis.

(b) "Passenger type tires" shall mean agricultural, airplane, industrial, mobile home, light and medium duty truck, and passenger vehicle tires with a bead diameter up to 20.0 inches and cross section dimension up to 12.8 inches.

(c) "Undertread cementing" shall mean the application of cement to the underside of a tire tread.

(d) "Tread-end cementing" shall mean the application of cement to the tire tread ends.

(e) "Green tires" shall mean assembled tires before molding and curing have occurred.

(f) "Green tire spraying" shall mean the spraying of green tires, both inside and outside, with compounds which help remove air from the tire, prevent the tire from sticking to the mold during curing, improve the finish, etc.

(g) "Water-based sprays or compounds" shall mean compounds in which solids, water, and emulsifiers (non-organic) constitute at least eighty-eight percent (88%) by weight of the compound.

(2) This rule applies to VOC emissions from the following operations:

(a) Undertread cementing,

(b) Tread-end cementing,

(c) Green tire spraying.

(3) The owner or operator of an undertread cementing, tread-end cementing, or green tire spraying operation subject to this rule shall:

(a) Install and operate a capture system which achieves maximum reasonable capture of evaporated VOC from all undertread cementing, tread-end cementing, and green tire spraying operations. If practical, maximum reasonable capture shall be consistent with the following documents:

1. "Industrial Ventilation, A Manual of Recommended Practices", 14th Edition, American Federation of Industrial Hygienists.

2. "Recommended Industrial Ventilation Guidelines", U.S. Department of Health, Education and Welfare, National Institute of Occupational Safety and Health.

(b) Install and operate a control device that removes or oxidizes to inorganic compounds at least ninety percent (90%) of the VOC by weight from the gases ducted to the control device. The device must be approved by the Director.

(c) The owner or operator may, instead of implementing the measures required by subparagraphs (a) and (b) of this paragraph, substitute water-based cements or compounds for the solvent-based cements or compounds.

(d) The owner or operator may, instead of implementing the measures required by subparagraphs (a), (b), and (c) of this paragraph, submit to the Director for approval a petition for alternative measures which have achieved or will achieve equivalent reductions in VOC emissions. Equivalent reductions mean that the total VOC emissions from undertread cementing, tread-end cementing and green tire spraying shall not exceed an average of 76 grams per green tire, as determined on a monthly basis.

(4) From the date of EPA approval of this regulation, the owner or operator shall adhere to the following schedules:

(a)

Required Action	**Schedule**
Submit final plans for control strategy	3 months
Award contracts or purchase orders	9 months
Complete modification, construction, or installation of equipment and/or processes	27 months
Achieve compliance	30 months

(b) Instead of the schedule contained in subparagraph (a) above, the owner or operator may submit to the Director, and the Director may approve, an alternative compliance schedule provided:

1. The schedule is submitted within three months after EPA approval of this regulation.

2. The need for or the advantages of an alternative schedule is adequately documented.

3. The schedule contains increments of progress.

4. Sufficient documentation and certification from appropriate suppliers, contractors, manufacturers or fabricators are submitted to justify the proposed dates for the increments of progress.

5. Final compliance is achieved as expeditiously as possible.

Author: Wm Gerald Hardy.
Statutory Authority: Code of Alabama 1975, §§22-28-14, 22-22A-5, 22-22A-6, and 22-22A-8.
History: Effective Date: April 19, 1984.
Amended: November 21, 1996.

335-3-6-.18 Manufacture of Synthesized Pharmaceutical Products.

(1) For the purpose of this rule, the following definitions apply:

(a) "Condenser" shall mean a device which cools a gas stream to a temperature which removes specific organic compounds by condensation.

(b) "Control system" shall mean any number of control devices, including condensers, which are designed and operated to reduce the quantity of VOCs emitted to the atmosphere.

(c) "Reactor" shall mean a vat or vessel, which may be jacketed to permit temperature control, designed to contain chemical reactions.

(d) "Separation operation" shall mean a process that separates a mixture of compounds and solvents into two or more components. Specific mechanisms include extraction, centrifugation, filtration, and crystallization.

(e) "Synthesized pharmaceutical manufacturing" shall mean manufacture of pharmaceutical products by chemical synthesis.

(f) "Production equipment exhaust system" shall mean a device for collecting and directing out of the work area VOC fugitive emissions from reactor openings, centrifuge openings, and other vessel openings for the purpose of protecting workers from excessive VOC exposure.

(2) This rule applies to all synthesized pharmaceutical manufacturing facilities.

(3) This rule applies to all sources of VOCs, including reactors, distillation units, dryers, storage of VOCs, transfer of VOCs, extraction equipment, filters, crystallizers and centrifuges that have the potential to emit 6.8 kilograms per day (15 pounds per day) or more.

(4) The owner or operator of a synthesized pharmaceutical manufacturing facility subject to this rule shall control the VOC emissions from all reactors, distillation operations, crystallizers, centrifuges and vacuum dryers that have the potential to emit 6.80 kilograms per day (15 pounds per day) or more of VOCs. Surface condensers or equivalent controls shall be used, provided that:

(a) If surface condensers are used, the condenser outlet gas temperature must not exceed:

1. -25 °C (-13 °F) when condensing a VOC of a vapor pressure greater than 40.0 kPa (5.8 psia)*

2. -15 °C (5 °F) when condensing a VOC of a vapor pressure greater than 20.0 kPa (2.9 psia)*

3. 0 °C (32 °F) when condensing a VOC of a vapor pressure greater than 10.0 kPa (1.5 psia)*

4. 10 °C (50 °F) when condensing a VOC of a vapor pressure greater than 7.0 kPa (1.0 psia)*; or,

5. 25 °C (77 °F) when condensing a VOC of a vapor pressure greater than 3.50 kPa (0.5 psia)*.

(b) If equivalent controls are used, the VOC emissions must be reduced by at least as much as they would be by using a surface condenser which meets the requirements of subparagraph (a) of this paragraph.

(5) The owner or operator of a synthesized pharmaceutical manufacturing facility subject to this rule shall reduce the VOC emissions from all air dryers and production equipment exhaust systems;

(a) by at least ninety percent (90%) if emissions are 150 kilograms per day (330 pounds per day) or more of VOC; or,

(b) to 15.0 kilograms per day (33 pounds per day) or less if emissions are less than 150 kilograms per day (330 pounds per day) of VOC.

(6) The owner or operator of a synthesized pharmaceutical manufacturing facility subject to this rule shall:

(a) provide a vapor balance system or equivalent control that is at least ninety percent (90%) effective in reducing emissions from truck or railcar deliveries to storage tanks with capacities greater than 7,500 liters (2,000 gallons) that store VOC with vapor pressures greater than 28.0 kPa (4.1 psia) at 20 °C (68 °F); and,

(b) install pressure/vacuum conservation vents set at D+ 0.2 kPa on all storage tanks that store VOC with vapor pressures greater than 10.0 kPa (1.5 psia) at 20 °C (68 °F), unless a more effective control system is used.

(7) The owner or operator of a synthesized pharmaceutical facility subject to this rule shall enclose all centrifuges, rotary vacuum filters, and other filters which process liquids containing VOC with vapor pressures of 3.50 kPa (0.5 psia) or more at 20 °C (68 °F).

---

* Vapor pressures as measured at 20 °C (68 °F)

(8) The owner or operator of a synthesized pharmaceutical facility subject to this rule shall install covers on all in-process tanks containing a VOC at any time. These covers must remain closed, unless production, sampling, maintenance, or inspection procedures require operator access.

(9) The owner or operator of a synthesized pharmaceutical manufacturing facility subject to this rule shall repair all leaks from which a liquid, containing VOC, can be observed running or dripping. The repair shall be completed the first time the equipment is off-line for a period of time long enough to complete the repair.

Author: Wm. Gerald Hardy.
Statutory Authority: Code of Alabama 1975, §§22-28-14, 22-22A-5, 22-22A-6, and 22-22A-8.
History: Effective Date: April 19, 1984.
Amended: November 21, 1996.

335-3-6-.19 Reserved.

335-3-6-.20 Leaks From Gasoline Tank Trucks and Vapor Collection Systems.

(1) For the purpose of this rule, the following definitions apply:

(a) "Air Sticker" shall mean a sticker to be affixed to a gasoline tank truck, representing issuance of an Air Permit and that the gasoline tank truck has been demonstrated during its most recent annual vapor leak testing to be leakfree.

(b) "Bottom Filling" shall mean the filling of a tank truck or stationary storage tank through an opening that is flush with the tank bottom.

(c) "Gasoline" shall mean a petroleum distillate having a Reid vapor pressure of 27.6 kPa (4 psia) or greater that is used as fuel for internal combustion engines.

(d) "Gasoline Tank Truck" shall mean tank trucks or trailers equipped with a storage tank and used for the transport of gasoline from sources of supply to stationary storage tanks of gasoline dispensing facilities, bulk gasoline plants or bulk gasoline terminals.

(e) "Gasoline Dispensing Facility" shall mean any site where gasoline is dispensed to motor vehicle gasoline tanks from stationary storage tanks.

(f) "Bulk Gasoline Terminal" shall mean a gasoline storage facility which receives gasoline from refineries primarily by pipeline, ship, or barge, and delivers gasoline to bulk gasoline plants or to commercial or retail accounts

primarily by tank truck; and has a daily throughput of more than 76,000 liters (20,000 gallons) of gasoline in any calendar month.

(g) "Bulk Gasoline Plant" shall mean a gasoline storage and distribution facility with an average daily throughput of 76,000 liters (20,000 gallons) or less in any calendar month which receives gasoline from bulk terminals by trailer transport, stores it in tanks, and subsequently dispenses the gasoline via account trucks to local farms, businesses, and gasoline dispensing facilities.

(h) "Vapor Collection System" shall mean a vapor transport system which uses direct displacement by the gasoline being transferred to force vapors from the vessel being loaded into either a vessel being unloaded or a vapor control system or vapor holding tank.

(i) "Vapor Control System" shall mean a system that prevents release to the atmosphere of at least ninety percent (90%) by weight of organic compounds in the vapors displaced from a vessel during transfer of gasoline.

(2) This rule is applicable to all vapor collection and control systems at bulk plants, bulk terminals, and gasoline dispensing facilities required by rules 335-3-6-.05, .06 and .07, and to all vapor collection systems on gasoline tank trucks affected by these rules.

(3) After October 1, 1991, no person shall allow a gasoline tank truck subject to this rule to be filled or emptied unless the gasoline tank truck has:

(a) a vapor collection system that meets the test requirements of subparagraph (4)(a) of this rule; and

(b) a valid Department Air Sticker attached and visibly displayed; or,

(c) a valid Jefferson County Department of Health Air Sticker attached and visibly displayed.

(4) Air Permits for Gasoline Tank Trucks.

(a) The owner or operator of a vapor collection system subject to this rule shall not load or cause to be loaded the said gasoline tank truck without a valid Air Sticker for the gasoline tank truck. An Air Permit and Air Sticker shall be issued by the Department for the gasoline tank truck upon receipt of appropriate documentation from the owner or operator documenting that the gasoline tank truck has been leak checked by the test method referenced in rule 335.3-6-.16(12)(c) and has during the test sustained a pressure change of no more than 0.750 kPa (3 inches of H_2O) within five (5) consecutive minutes when pressurized to a gauge pressure of 4.50 kPa (18 inches of H_2O) and, when evacuated to a gauge pressure of 1.50 kPa (6 inches of H_2O) during the testing.

(b) Any owner or operator obtaining an Air Permit and Air Sticker from the Jefferson County Department of Health shall not be required to obtain an additional Air Permit and Air Sticker from the Department.

(c) The Air Sticker shall be renewed annually upon successful demonstration by the owner or operator that the gasoline tank truck has been leak checked and passed the requirements of subparagraph (a) of this paragraph above.

(d) The owner or operator shall display the Air Sticker near the Department of Transportation Certification plate required by 49 CFR 178.340-10b.

(5) The owner or operator of a vapor collection system at a bulk plant, bulk terminal, gasoline dispensing facility or gasoline tank truck subject to this rule shall:

(a) design and operate the vapor collection system and the gasoline loading equipment in a manner that prevents:

1. gauge pressure from exceeding 4.50 kPa (18 inches of H_2O) and vacuum from exceeding 1.50 kPa (6 inches of H_2O) in the gasoline tank truck;

2. a reading equal to or greater than one hundred percent (100%) of the lower explosive limit (LEL, measured as propane) at 2.5 centimeters from all points on the perimeter of a potential leak source when measured by the method referenced in rule 335-3-6-.16(12) during loading or unloading operations at gasoline dispensing facilities, bulk plants and bulk terminals; and

3. avoidable visible liquid leaks during loading or unloading operations at gasoline dispensing facilities, bulk plants and bulk terminals;

(b) and within fifteen (15) days, repair and retest a vapor collection or control system that exceeds the limit in subparagraph (a)2. of this paragraph.

(6) The Director may, at any time, monitor a gasoline tank truck, vapor collection system or vapor control system to confirm continuing compliance with paragraphs (3), (4) and (5) of this rule. Monitoring to confirm the continuing existence of leak-tight conditions shall be consistent with the procedures described in Appendix B of the OAQPS Guideline Series document, "Control of Organic Compound Leaks from Gasoline Tank Trucks and Vapor Collection Systems", EPA-450/2-78-051.

(7) Each vapor-laden gasoline tank truck shall be designed and maintained to be vapor-tight during loading, unloading operations, and transport with the exception of normal pressure/vacuum venting as required by DOT regulations.

Author: Wm. Gerald Hardy.
Statutory Authority: Code of Alabama 1975, §§22-28-14, 22-22A-5, 22-22A-6, and 22-22A-8.
History: Effective Date: April 19, 1984.
Amended: November 1, 1990; November 21, 1996.

335-3-6-.21 Leaks from Petroleum Refinery Equipment.

(1) For the purpose of this rule, the following definitions apply:

(a) "Petroleum refinery" shall mean any facility engaged in producing gasoline, kerosene, distillate fuel oils, residual fuel oils, lubricants, or other products through distillation, cracking, extraction, or reforming of unfinished petroleum derivatives.

(b) "Leaking component" shall mean any source which has a VOC concentration exceeding 10,000 parts per million by volume when tested in the manner described in rule 335-3-6-.16(13). These sources include, but are not limited to, pumping seals, compressor seals, seal oil degassing vents, pipeline valves, flanges and other connections, pressure relief devices, process drains, and open ended pipes. Excluded from these sources are valves which are not externally regulated.

(c) "Liquid service" shall mean equipment which processes, transfers or contains a VOC or mixture of VOCs in the liquid phase.

(d) "Gas service" shall mean equipment which processes, transfers or contains a VOC or mixture of VOCs in the gaseous phase.

(e) "Valves not externally regulated" shall mean valves that have no external controls, such as in-line check valves.

(f) "Refinery unit" shall mean a set of components which are a part of a basic process operation, such as, distillation, hydrotreating, cracking or reforming of hydrocarbons.

(2) This rule applies to all petroleum refineries.

(3) The owner or operator of a petroleum refinery complex subject to this regulation shall develop and conduct a monitoring program consistent with paragraphs (7) through (14) of this rule, inclusive.

(4) The owner or operator of a petroleum refinery complex, upon detection of a leaking component, which has a VOC concentration exceeding 10,000 parts per million by volume when tested in the manner described in rule 335-3-6-.16(13), shall:

(a) include the leaking component on a written list of scheduled repairs within twenty-four (24) hours; and,

(b) repair and retest the component within fifteen (15) days unless the leaking component cannot be repaired until the unit is shutdown for turnaround.

(5) Except for safety pressure relief valves, no owner or operator of a petroleum refinery shall install a valve at the end of a pipe or line containing

VOCs unless the pipe or line is sealed with a second valve, a blind flange, a plug, or a cap. The sealing device may be removed only when the line is in use (i.e., when a sample is being taken).

(6) No owner or operator of a petroleum refinery shall operate a pipeline valve or pressure relief valve in gaseous VOC service unless it is marked in some manner that will be readily obvious to both refinery personnel performing monitoring and the Director.

(7) The owner or operator of a petroleum refinery shall maintain a leaking components monitoring log which shall contain, at a minimum, the following data:

(a) The name of the process unit where the component is located.

(b) The type of component (e.g., valve, seal).

(c) The tag number of the component.

(d) The date on which a leaking component is discovered.

(e) The date on which a leaking component is repaired.

(f) The date and instrument reading of the recheck procedure after a leaking component is repaired.

(g) A record of the calibration of the monitoring instrument.

(h) Those leaks that cannot be repaired until turnaround.

(i) The total number of components checked and the total number of components found leaking.

(8) Copies of the monitoring log shall be retained by the owner or operator for a minimum of 2 years after the date on which the record was made or the report prepared.

(9) Copies of the monitoring log shall immediately be made available to the Director, upon verbal or written request, at any reasonable time.

(10) The owner or operator of a petroleum refinery, upon the completion of each yearly and/or quarterly monitoring procedure, shall:

(a) Submit a report to the Director by the 15th day, of January, April, July, and October that lists all leaking components that were located during the previous 3 calendar months but not repaired within 15 days, all leaking components awaiting unit turnaround, the total number of components inspected and the total number of components found leaking.

(b) Submit a signed statement with the report attesting to the fact that, with the exception of those leaking components listed in subparagraph (a) of this paragraph all monitoring and repairs were performed as stipulated in the monitoring program.

(11) The Director, upon written notice, may modify the monitoring, recordkeeping and reporting requirements.

(12) The owner or operator of a petroleum refinery subject to this regulation shall conduct a monitoring program consistent with the following provisions:

(a) Monitor yearly by the methods referenced in rule 335-3-6-.16(13), all

1. pump seals;

2. pipeline valves in liquid service; and

3. process drains.

(b) Monitor quarterly by the methods referenced in rule 335-3-6-.16(13), all

1. compressor seals;

2. pipeline valves in gaseous service; and

3. pressure relief valves in gaseous service.

(c) Monitor weekly by visual methods all pump seals;

(d) Monitor immediately any pump seal from which liquids are observed dripping;

(e) Monitor any relief valve within twenty-four (24) hours after it has vented to the atmosphere; and

(f) Monitor immediately after repair any component that was found leaking.

(13) Pressure relief devices which are connected to an operating flare header, vapor recovery device, inaccessible valves, storage tank valves, and valves that are not externally regulated are exempt from the monitoring requirements in paragraph (12) of this rule above.

(14) The owner or operator of a petroleum refinery, upon the detection of a leaking component, shall affix a weatherproof and readily visible tag, bearing an identification number and the date the leak is located, to the leaking component. This tag shall remain in place until the leaking component is repaired.

Author: Wm. Gerald Hardy.
Statutory Authority: Code of Alabama 1975, §§22-28-14, 22-22A-5, 22-22A-6, and 22-22A-8.
History: Effective Date: April 19, 1984.
Amended: November 21, 1996.

335-3-6-.22 Graphic Arts.

(1) For the purpose of this rule, the following definitions apply:

(a) "Packaging rotogravure printing" shall mean printing upon paper, paper board, metal foil, plastic film, and other substrates, which are, in subsequent operations, formed into containers and labels for articles to be sold.

(b) "Publication rotogravure printing" shall mean printing upon paper which is subsequently formed into books, magazines, catalogues, brochures, directories, newspaper supplements, and other types of printed materials.

(c) "Flexographic printing" shall mean the application of words, designs and pictures to a substrate by means of a roll printing technique in which both the pattern to be applied is raised above the printing roll and the image carrier is made of rubber or other elastometric materials.

(d) "Roll printing" shall mean the application of words, designs and pictures to a substrate usually by means of a series hard rubber or steel rolls each with only partial coverage.

(e) "Rotogravure printing" shall mean the application of words, designs and pictures to a substrate by means of a roll printing technique which involves an intaglio or recessed image areas in the form of cells.

(2) This rule will apply to packaging rotogravure, printing rotogravure, and flexographic printing facilities.

(3) No owner or operator of a packaging rotogravure, printing rotogravure or flexographic printing facility subject to this rule and employing solvent containing ink may operate, cause, allow or permit the operation of the facility unless:

(a) The volatile fraction of ink, as it is applied to the substrate, contains twenty-five percent (25%) by volume or less of organic solvent and seventy-five percent (75%) by volume or more of water;

(b) The facility prints with ink which contains sixty percent (60%) by volume or more nonvolatile material; or,

(c) The owner or operator installs and operates:

1. A carbon adsorption system which reduces the volatile organic emissions from the capture system by at least ninety percent (90%) by weight;

2. An incineration system which oxidizes at least ninety percent (90%) of the nonmethane VOCs (VOC measured as total combustible carbon) to carbon dioxide and water; or,

3. An alternative VOC emission reduction system demonstrated to have at least a ninety percent (90%) reduction efficiency, measured across the control system, that has been approved by the Director.

(4) A capture system must be used in conjunction with the emission control systems in subparagraph (3)(c) of this rule. The design and operation of a capture system must be consistent with good engineering practice, and shall be required to provide for an overall reduction in VOC emissions of at least:

(a) seventy-five percent (75%) where a publication rotogravure process is employed;

(b) sixty-five percent (65%) where a packaging rotogravure process is employed; or,

(c) sixty percent (60%) where a flexographic printing process is employed.

Author: Wm. Gerald Hardy.
Statutory Authority: Code of Alabama 1975, §§22-28-14, 22-22A-5, 22-22A-6, and 22-22A-8.
History: Effective Date: April 19, 1984.
Amended: November 21, 1996.

335-3-6-.23 Petroleum Liquid Storage In External Floating Roof Tanks.

(1) For the purpose of this rule, the following definitions apply:

(a) "Condensate" shall mean hydrocarbon liquid separated from natural gas which condenses due to changes in the temperature and/or pressure and remains liquid at standard conditions.

(b) "Crude oil" shall mean a naturally occurring mixture which consists of hydrocarbons and sulfur, nitrogen and/or oxygen derivatives of hydrocarbons which is a liquid in the reservoir at standard conditions.

(c) "Custody transfer" shall mean the transfer of produced crude oil and/or condensate, after processing and/or treating in the producing operations, from storage tanks or automatic transfer facilities to pipelines or any other forms of transportation.

(d) "External floating roof" shall mean a storage vessel cover in an open top tank consisting of a double deck or pontoon single deck which rests upon and is supported by the petroleum liquid being contained and is equipped with a closure seal or seals to close the space between the roof edge and tank wall.

(e) "Liquid-mounted seal" shall mean a primary seal mounted in continuous contact with the liquid between the tank wall and the floating roof around the circumference of the tank.

(f) "Petroleum liquids" mean crude oil, condensate, and any finished or intermediate products manufactured or extracted in a petroleum refinery.

(g) "Vapor-mounted seal" shall mean any primary seal mounted continuously around the circumference of the tank. The annular vapor space is bounded by the bottom of the primary seal, the tank wall, the liquid surface, and the floating roof.

(h) "Waxy, heavy pour crude oil" shall mean a crude oil with a pour point of 10 °C (50 °F) or higher as determined by the American Society for Testing Materials Standard D 97-66, "Test for Pour Point of Petroleum Oils".

(2) This rule shall apply to all petroleum liquid storage vessels equipped with external floating roofs, having capacities greater than 150,000 liters (40,000 gallons).

(3) This rule does not apply to petroleum liquid storage vessels which:

(a) are used to store waxy, heavy pour crude oil;

(b) have capacities less than 1,600,000 liters (423,000 gallons) and are used to store produced crude oil and condensate prior to custody transfer;

(c) contain a petroleum liquid with a true vapor pressure of less than 10.5 kPa (1.5 psia);

(d) contain a petroleum liquid with a true vapor pressure less than 27.6 kPa (4.0 psia); and,

1. are of welded construction; and,

2. presently possess a metallic-type shoe seal, a liquid-mounted foam seal, a liquid-mounted liquid filled type seal, or other closure device of demonstrated equivalence approved by the Director; or,

(e) are of welded construction, equipped with a metallic-type shoe primary seal and has a secondary seal from the top of the shoe seal to the tank wall (shoe-mounted secondary seal).

(4) No owner or operator of a petroleum liquid storage vessel subject to this rule shall store a petroleum liquid in that vessel unless:

(a) the vessel has been fitted with:

1. a continuous secondary seal extending from the floating roof to the tank wall (rim-mounted secondary seal); or

2. a closure or other device which controls VOC emissions with an effectiveness equal to or greater than a seal required under subparagraph (a)1. of this paragraph above, as approved by the Director.

(b) All seal closure devices meet the following requirements:

1. there are no visible holes, tears, or other openings in the seal(s) or seal fabric;

2. the seal(s) are intact and uniformly in place around the circumference of the floating roof between the floating roof and tank wall; and,

3. for vapor mounted seals, the area of accumulated gaps between the secondary seal and the tank wall are determined by the method in rule 335-3-6-.16(8)(c), and shall not exceed 21.2 square centimeters per meter of tank diameter (1.0 square inch per foot of tank diameter)

(c) All openings in the external floating roof, except for automatic bleeder vents, rim space vents, and leg sleeves, are:

1. equipped with covers, seals, or lids in the closed position except when the openings are in actual use; and,

2. equipped with projections into the tank which remain below the liquid surface.

(d) Automatic bleeder vents are closed at all times except when the roof is floated off or landed on the roof leg supports;

(e) Rim vents are set to open when the roof is being floated off the leg supports or at the manufacturer's recommended setting; and,

(f) Emergency roof drains are provided with slotted membrane fabric covers or equivalent covers which cover at least ninety percent (90%) of the area of the opening.

(5) The owner or operator of a petroleum liquid storage vessel with an external floating roof subject to this rule shall:

(a) perform routine inspections semi-annually in order to ensure compliance with paragraph (4) of this rule, and the inspections shall include a visual inspection of the secondary seal gap;

(b) measure the secondary seal gap annually in accordance with rule 335-3-6-.16(8) when the floating roof is equipped with a vapor-mounted primary seal; and,

(c) maintain records of the throughput quantities and types of volatile petroleum liquids stored.

(6) The owner or operator of a petroleum liquid storage vessel with an external floating roof not subject to this rule, but containing a petroleum liquid with a true vapor pressure greater than 7.0 kPa (1.0 psia), shall maintain records of the average monthly storage temperature, the type of liquid, throughput quantities, and the maximum true vapor pressure for all petroleum liquids with a true vapor pressure greater than 7.0 kPa.

(7) The owner or operator of a petroleum liquid storage vessel subject to this rule shall submit to the Director, as a minimum, an annual report detailing the results of routine monthly inspections, secondary seal gap measurements, and the amounts and physical properties of stored liquids.

(8) Copies of all records and reports under paragraphs (5), (6), and (7) of this rule shall be retained by the owner or operator for a minimum of two (2) years after the date on which the record was made or the report submitted.

Author: Wm. Gerald Hardy.
Statutory Authority: Code of Alabama 1975, §§22-28-14, 22-22A-5, 22-22A-6, and 22-22A-8.
History: Effective Date: April 19, 1984.
Amended: November 21, 1996.

335-3-6-.24 Applicability.

(1) The provisions of rules 335-3-6-.24 through 335-3-6-.52 of this chapter shall apply to all sources of Volatile Organic Compounds (VOC) in accordance with schedules contained in rule 335-3-6-.36 except:

(a) sources specifically exempted under any rule of this chapter through annual operating, production, or potential VOC emissions rates.

(b) sources used exclusively for chemical or physical analysis or determination of product quality and commercial acceptance provided:

1. the operation of the sources is not an integral part of the production process; and

2. the emissions from sources do not exceed 363 kilograms (800 pounds) in any calendar month;

(2) Fifty-five (55) gallons of all low-use coatings in the aggregate may be exempted on a plantwide basis (not per point emissions source) from regulation

under rules 335-3-6-.25 through .53 provided the following conditions are complied with:

(a) prior written approval from the Director is obtained,

(b) all applicable air permits contain permit provisos requiring recordkeeping in accordance with rule 335-3-6-.32(12), and

(c) the fifty-five (55) gallon usage rate is based on an annual rolling average.

(d) "Low-use coating" shall mean a coating or an aggregate of coatings used in quantities of 55 gallons or less per year for intermittent or specialty-type operations within a single facility. Yearly usage is based on an annual rolling average.

Author:
Statutory Authority: Code of Alabama 1975, §§22-28-14, 22-22A-5, 22-22A-6, and 22-22A-8.
History: Effective Date: June 9, 1987.
Amended: September 21, 1989; July 31, 1991; November 21, 1996.

335-3-6-.25 VOC Water Separation.

(1) No person shall use any compartment of any single or multiple compartment VOC water separator which receives effluent water containing 1,000 gallons a day or more of any VOC from processing, refining, treating, storing, or handling VOCs, unless such compartment is equipped with one of the following vapor loss control devices, properly installed, in good working order, and in operation:

(a) a container having all openings sealed and totally enclosing the liquid contents. All gauging and sampling devices shall be gastight, except when gauging or sampling is performed.

(b) a container equipped with a floating roof consisting of a pontoon type, double-deck type roof or internal floating cover which shall rest on the surface of the contents and be equipped with a closure seal or seals to close the space between the roof edge and containing walls. All gauging or sampling devices shall be gas-tight, except when gauging or sampling is performed.

(c) a container equipped with a vapor recovery system consisting of a vapor gathering system capable of collecting the VOC vapors and gases dispersed and a vapor disposal system capable of processing such VOC vapors and gases so as to prevent their emission into the atmosphere. All container gauging and sampling devices shall be gastight, except when gauging or sampling is performed.

(d) a container having other equipment of equal efficiency for purposes of air pollution control as may be approved by the Director.

Author:
Statutory Authority: Code of Alabama 1975, §§22-28-14, 22-22A-5, 22-22A-6, and 22-22A-8.
History: Effective Date: June 19, 1987.
Amended:

335-3-6-.26 Loading and Storage of VOC.

(1) For the purposes of this rule, any stationary storage tank containing a VOC with a true vapor pressure of 1.5 pounds per square inch absolute or greater (78 mm Hg) under actual storage conditions shall be subject to this rule.

(2) No person shall:

(a) place, store, or hold in any stationary storage vessel of more than 1,000-gallon capacity any VOC unless such vessel is a pressure tank or is equipped with a permanent submerged fill pipe or bottom fill pipe (storage vessels in existence prior to January 30, 1973 may employ portable submerged fill pipe).

(b) place, store, or hold in any stationary storage vessel of more than 40,000 gallon capacity any VOC unless such vessel is equipped with one of the following vapor loss control devices, as appropriate:

1. Liquids of intermediate volatility [liquids having a true vapor pressure under actual storage conditions of greater than 1.5 psia (78 mm Hg) but not greater than 11.1 psia (570 mm Hg)] shall be stored in vessels equipped with a floating roof or a vapor recovery system or an equivalent control system. A floating roof may be a double-deck, or flexible single-deck, pontoon-type cover which rests upon and is supported by the stored liquid, and shall be equipped with a closure seal or seals to close the space between the roof edge and the tank wall. All tank gauging or sampling devices shall be airtight except when sampling or tank gauging is performed.

2. Liquids of high volatility [liquids having a true vapor pressure under actual storage conditions of greater than 11.1 psia (570 mm Hg)] shall be stored in vessels equipped with vapor recovery systems or equivalent vapor control systems. A vapor recovery system includes a system of collecting vapors and gases so as to prevent their emissions to the atmosphere. All tank gauging or sampling devices shall be airtight except when sampling or tank gauging is performed.

3. Other equipment of equal efficiency for purposes of air pollution control as may be approved by the Director.

(c) Load any VOCs into any gasoline tank truck or trailer having a capacity in excess of two hundred (200) gallons from any terminal or bulk storage facility unless such terminal or facility is:

1. equipped with:

(i) a vapor collection system or its equivalent, properly installed, in good working order, with a loading arm equipped with a vapor collection adapter of pneumatic, hydraulic, or other mechanical means which will provide a vapor-tight seal between the adapter and the hatch; or

(ii) a loading system which will result in a submerged fill either with a submerged fill pipe or by loading from the bottom, and, with loading lines equipped with fittings which make vapor-tight connections and which will close automatically when disconnected; and

2. for hatch-loading, equipped with a means to prevent liquid organic compound drainage from the loading device when it is removed from the hatch of any transport vessel or transport container.

(3) This rule shall not apply to crude petroleum produced, separated, treated, or stored in the field.

Author:
Statutory Authority: Code of Alabama 1975, §§22-28-14, 22-22A-5, 22-22A-6, and 22-22A-8.
History: Effective Date: June 9, 1987.
Amended: September 21, 1989; July 31, 1991.

335-3-6-.27 Fixed-Roof Petroleum Liquid Storage Vessels.

(1) For the purpose of this rule, the following definitions apply:

(a) "Condensate" means hydrocarbon liquid separated from natural gas which condenses due to changes in the temperature and/or pressure and remains liquid at standard conditions.

(b) "Crude Oil" means a naturally occurring mixture which consists of hydrocarbons and/or sulfur, nitrogen and/or oxygen derivatives of hydrocarbons and which is a liquid in the reservoir at standard conditions.

(c) "Custody Transfer" means the transfer of produced crude oil and/or condensate, after processing and/or treating in the producing operations, from storage tanks or automatic transfer facilities to pipelines or any other form of transportation.

(d) "External Floating Roof" means a storage vessel cover in an open top tank consisting of a double deck or pontoon single deck which rests upon and is

supported by the petroleum liquid being contained and is equipped with a closure seal or seals to close the space between the roof edge and tank shell.

(e) "Internal Floating Roof" means a cover or roof in a fixed roof tank which rests upon or is floated upon the petroleum liquid being contained and is equipped with a closure seal or seals to close the space between the roof edge and tank shell.

(f) "Petroleum Liquids" mean crude oil, condensate, and any finished or intermediate products manufactured or extracted in a petroleum refinery.

(g) "Petroleum Refinery" means any facility engaged in producing gasoline, kerosene, distillate fuel oils, residual fuel oils, lubricants, or other products through distillation, cracking, extraction, or reforming of unfinished petroleum derivatives.

(2) This rule shall apply to all fixed roof storage vessels with capacities greater than 151,416 liters (40,000 gallons) containing petroleum liquids whose true vapor pressure (TVP) is greater than 10.5 kPa (1.52 psia) under actual storage conditions. Vessels containing petroleum liquids whose TVP is equal to or less than 10.5 kPa (1.5 psia) are exempt, provided that records are maintained of the average monthly storage temperature and TVP of the petroleum liquid stored if the product has a stored TVP greater than 7.0 kPa (1.0 psia).

(3) This rule shall not apply to the following petroleum liquid storage vessels:

(a) equipped with external floating roofs before July 1, 1979; and

(b) having capacities less than 1,601,224 liters (423,000 gallons) used to store produced crude oil and condensate prior to lease custody transfer.

(4) Except as provided under paragraph (3) of this rule, no owner or operator of an affected source under paragraph (2) of this rule shall permit the use of such source unless:

(a) the source has been retrofitted with an internal floating roof equipped with a closure seal or seals to close the space between the roof edge and tank wall; or

(b) the source has been retrofitted with equally effective alternative control equipment, approved by the Director;

(c) the source is maintained such that there are no visible holes, tears, or other openings in the seal or any seal fabric or materials; and

(d) all openings, except stub drains, are equipped with covers, lids, or seals such that:

1. the cover, lid, or seal is in the closed position at all times except when in actual use;

2. automatic bleeder vents are closed at all times except when the roof is floated off or landed on the roof leg support; and

3. rim vents, if provided, are set to open when the roof is being floated off the roof leg supports or at the manufacturer's recommended setting; and

(e) routine inspections are conducted through roof hatches once every six months; and

(f) a complete inspection of cover and seals is conducted whenever the tank is emptied for nonoperational reasons.

Author:
Statutory Authority: Code of Alabama 1975, §§22-28-14, 22-22A-5, 22-22A-6, and 22-22A-8.
History: Effective Date: June 9, 1987.
Amended: July 31, 1991; November 21, 1996.

335-3-6-.28 Bulk Gasoline Plants.

(1) For the purpose of this rule, the following definitions apply:

(a) "Bottom Filling" means the filling of a gasoline tank truck or stationary storage tank through an opening that is flush with the tank bottoms.

(b) "Bulk Gasoline Plant" means a gasoline storage and distribution facility with an average daily throughput equal to or less than 75,708 liters (20,000 gallons) of gasoline per day averaged over the work days in one calendar year which receives gasoline from bulk terminals by gasoline tank truck or trailer, stores it in tanks, and subsequently dispenses it via account trucks to local farms, businesses, and gasoline dispensing facility.

(c) "Splash Filling" means the filling of a gasoline tank truck or stationary tank through a pipe or hose whose discharge opening is above the surface level of the liquid in the tank being filled.

(d) "Vapor Balance System" means a combination of pipes or hoses which create a closed system between the vapor spaces of an unloading and a receiving tank such that vapors displaced from the receiving tank are transferred to the tank being unloaded.

(2) This rule shall apply to the unloading, loading, and storage operations of all bulk gasoline plants and all gasoline tank trucks or trailers delivering or receiving gasoline at bulk gasoline plants, except stationary storage tanks of less than 3,785 liters (1,000 gallons) capacity.

(3) Except as provided under paragraph (2) of this rule, no owner or operator of a bulk gasoline plant shall permit stationary storage tanks to load or unload gasoline unless each tank is equipped with vapor balance system as described under paragraph (6) of this rule and approved by the Director; and

(a) each tank is equipped with a submerged or bottom fill pipe, approved by the Director; or

(b) each tank is equipped with a fill line whose discharge opening is not over 18 inches from the bottom of the tank.

(4) Except as provided under paragraph (2) of this rule, no owner or operator of a bulk gasoline plant, gasoline tank truck, or trailer shall permit the loading or unloading of gasoline tank trucks or trailers at a bulk gasoline plant unless each gasoline tank truck or trailer is equipped with a vapor balance system as described under paragraph (6) of this rule and complies with rule 335-3-6-.41(3); and

(a) equipment is available at the bulk gasoline plant to provide for the submerged filling of each gasoline tank truck or trailer; or

(b) each gasoline tank truck or trailer is equipped for bottom filling.

(5) No owner or operator of a bulk gasoline plant, gasoline tank truck, or trailer shall permit the transfer of gasoline between gasoline tank truck or trailer and a stationary storage tank unless:

(a) the transfer is conducted in accordance with paragraphs (3) and (4) of this rule;

(b) the vapor balance system is in good working order and is connected and operating;

(c) gasoline tank truck or trailer hatches are closed and vapor-tight at all times during loading operations;

(d) there are no leaks in the gasoline tank trucks' and trailers' pressure/vacuum relief valves and hatch covers, or the truck tanks or storage tanks, or associated vapor and liquid lines during loading or unloading;

(e) the pressure relief valves on stationary storage vessels and gasoline tank trucks or trailers are set to release at no less than 4.8 kPa (0.7 psia) or the highest possible pressure (in accordance with state or local fire codes or the National Fire Prevention Association guidelines); and

(f) the gasoline tank truck or trailer has a valid Jefferson County Department of Health Air Sticker as required by rule 335-3-6-.41(4) attached and visibly displayed.

(6) Vapor balance system required under paragraphs (3) and (4) of this rule shall consist of the following major components:

(a) a vapor space connection on the stationary storage tank equipped with fittings which are vapor-tight and will automatically and immediately close upon disconnection so as to prevent release of organic compounds;

(b) a connecting pipe or hose equipped with fittings which are vapor-tight and will automatically and immediately close upon disconnection so as to prevent release of organic compounds; and

(c) a vapor space connection on the gasoline tank truck or trailer equipped with fittings which are vapor-tight and will automatically and immediately close upon disconnection so as to prevent release of organic material.

(7) No owner or operator of a bulk gasoline plant shall permit the disposal of waste gasoline in sewers, open containers or in a manner that would result in evaporation.

(8) The owner or operator of a gasoline bulk plant subject to this rule shall:

(a) maintain records of the annual throughput quantities and types of volatile petroleum liquids stored in each storage tank;

(b) maintain a daily record of all gasoline tank trucks or trailers loaded or unloaded and the Jefferson County Department of Health Air Sticker number of each gasoline tank truck or trailer;

(c) submit to the Director as a minimum, an annual summary report of the records required under subparagraph (a) of this paragraph; and

(d) copies of all records and reports required under subparagraph (b) of this paragraph shall be available to representatives of the Director upon request and shall be retained by the owner or operator for a minimum of two (2) years after the date on which the record was made.

Author:
Statutory Authority: Code of Alabama 1975, §§22-28-14, 22-22A-5, 22-22A-6, and 22-22A-8.
History: Effective Date: June 9, 1987.
Amended: July 31, 1991; November 21, 1996.

335-3-6-.29 Bulk Gasoline Terminals.

(1) For the purpose of this rule, the following definitions apply:

(a) "Bulk Gasoline Terminal" means a gasoline storage facility which receives gasoline from its supply source primarily by pipelines, ships, barges and delivers gasoline to bulk gasoline plants or to commercial or retail accounts primarily by gasoline tank trucks and has an average daily throughput of more than 75,708 liters (20,000 gallons) of gasoline.

(2) This rule shall apply to bulk gasoline terminals and the appurtenant equipment necessary to load the gasoline tank truck or trailer compartments.

(3) No person shall load gasoline into any gasoline tank truck or trailer from any bulk gasoline terminal unless:

(a) the bulk gasoline terminal is equipped with a vapor recovery equipment system capable of complying with paragraph (4) of this rule, properly installed, in good working order, in operation, and consisting of one of the following:

1. an adsorber or condensation system which processes and recovers at least ninety percent (90%) by weight of all vapors and gases from the equipment being controlled;

2. a vapor collection system which directs all vapors to a fuel gas system; or

3. a control equipment system demonstrated to have control efficiency equivalent to or greater than subparagraphs (a)1. or (a)2. of this paragraph and approved by the Director; and

(b) all displaced vapors and gases are vented only to the vapor control system;

(c) a means is provided to prevent liquid drainage from the loading device when it is not in use or to accomplish complete drainage before the loading device is disconnected;

(d) all loading and vapor lines are equipped with fittings which make vapor-tight connections and which close automatically when disconnected; and

(e) the gasoline tank truck or trailer has a valid Jefferson County Department of Health Air Sticker as required by rule 335-3-6-.41(4) attached and visibly displayed.

(4) Sources affected under subparagraph (3)(a) shall not allow mass emissions of VOCs from control equipment to exceed 80 milligrams per liter (4.7 grains per gallon) of gasoline loaded.

(5) Sources affected under paragraph (2) of this rule shall not:

(a) allow the pressure in the vapor collection system to exceed the gasoline tank truck or trailer pressure relief settings; nor

(b) allow the disposal of waste gasoline in sewers, open containers or in a manner that would result in evaporation.

(6) The owner or operator of a gasoline bulk terminal subject to this rule shall:

(a) maintain records of the annual throughput quantities and types of petroleum liquids stored in each storage tank;

(b) maintain a daily record of all gasoline tank trucks or trailers loaded or unloaded and the Jefferson County Department of Health Air Sticker number of each gasoline tank truck or trailer;

(c) submit to the Director as a minimum, an annual summary report of the records required under subparagraph (a) of this paragraph; and

(d) copies of all records and reports required under subparagraph (b) of this paragraph shall be available to representatives of the Director upon request and shall be retained by the owner or operator for a minimum of two (2) years after the date on which the record was made.

Author:
Statutory Authority: Code of Alabama 1975, §§22-28-14, 22-22A-5, 22-22A-6, and 22-22A-8.
History: Effective Date: June 9, 1987.
Amended: July 31, 1991; November 21, 1996.

335-3-6-.30 Gasoline Dispensing Facilities - Stage I Control.

(1) For the purpose of this rule, the following definitions apply:

(a) "Gasoline Tank Truck" means tank trucks or trailers equipped with a storage tank and used for the transport of gasoline from sources of supply to stationary storage tanks of gasoline dispensing facilities.

(b) "Gasoline Dispensing Facility" means any outlet where gasoline is dispensed to motor vehicle gasoline tanks from stationary storage tanks.

(c) "Vapor Balance System (Stage I)" means a vapor-tight system that transfers the vapors displaced from the stationary storage tanks to the gasoline tank truck.

(d) "Average Monthly Throughput of Gasoline" means the average monthly throughput for the last previous months of June, July, and August during full operation.

(2) This rule shall apply to all gasoline dispensing facilities except:

(a) transfers made to storage tanks or gasoline dispensing facilities equipped with floating roofs or their equivalent;

(b) transfers made to stationary gasoline storage tanks of less than 3,785 liters (1,000 gallons) capacity in place before July 1, 1979 and of less than 946 liters (250 gallons) installed after July 1, 1979;

(c) stationary gasoline storage containers of less than 2,082 liters (550 gallons) capacity used exclusively for the fueling of implements of husbandry, provided the containers are equipped with submerged fill pipe; and

(d) any existing facility with an average monthly throughput of gasoline of less than 4,000 gallons, provided that all gasoline storage tanks that are not exempted under subparagraphs (a), (b), and (c) of this paragraph are equipped with a submerged fill pipe.

(3) No owner or operator shall transfer, cause, or allow the transfer of gasoline from any gasoline tank truck into any stationary storage tank subject to this rule, unless the tank is equipped with a submerged fill pipe and the vapors displaced from the storage tank during filling are processed by a vapor control system in accordance with paragraph (4) of this rule.

(4) The vapor control system required by paragraph (3) of this rule shall include one or more of the following:

(a) a vapor balance system (Stage I) between the stationary storage tank and the gasoline tank truck and a system that will ensure the vapor line is connected before gasoline can be transferred into the tank;

(b) a refrigeration condensation system or equivalent designed to recover at least ninety percent (90%) by weight of the organic compounds in the displaced vapor; or

(c) a control equipment system demonstrated to have control efficiency equivalent to or greater than provided under subparagraph (b) of this paragraph and approved by the Director.

(5) Each owner or operator of a gasoline dispensing facility subject to this rule shall:

(a) not permit the transfer of gasoline between a gasoline tank truck and a stationary storage tank unless the gasoline tank truck complies with rule 335-3-6-.41 and the vapor control system is connected and operating in accordance with paragraph (4) of this rule;

(b) maintain written records of the monthly throughput quantities in gallons and types of petroleum distillates in all stationary storage tanks;

(c) submit to the Director, as a minimum, an annual summary report of the record required under subparagraph (b) of this paragraph; and

(d) make available to representatives of the Director upon request copies of all records and reports required under subparagraphs (b) and (c) of this paragraph and retain the records and reports for a minimum of two (2) years after the date on which the documents were made.

(6) No owner or operator of a gasoline dispensing facility subject to this rule shall cause or allow gasoline to be spilled, discarded in sewers, stored in open containers, or handled in any other manner that would result in evaporation of the gasoline to the atmosphere.

(7) Regardless of the applicability exemption under subparagraph (2)(d) of this rule, all gasoline dispensing facilities that are subject to this rule shall not disconnect an existing vapor balance system and shall maintain the system in proper working order in accordance with this rule even if the facility's average monthly throughput of gasoline decreases to less than 4,000 gallons.

Author:
Statutory Authority: Code of Alabama 1975, §§22-28-14, 22-22A-5, 22-22A-6, and 22-22A-8.
History: Effective Date: June 9, 1987.
Amended: July 31, 1991; November 21, 1996.

335-3-6-.31 Reserved.

335-3-6-.32 Surface Coating.

(1) Can Coating.

(a) For the purpose of this paragraph, the following definitions apply:

1. "End Sealing Compound" means a synthetic rubber compound which is coated on to can ends and which functions as a gasket when the end is assembled on the can.

2. "Exterior Base Coating" means a coating applied to the exterior of a can to provide exterior protection to the metal and to provide background for the lithographic or printing operation.

3. "Interior Base Coating" means a coating applied by roller coater or spray to the interior of a can to provide a protective lining between the can metal and product.

4. "Interior Body Spray" means a coating sprayed on the interior of the can to provide a protective film between the product and the can.

5. "Overvarnish" means a coating applied directly over ink to reduce the coefficient of friction, to provide gloss, and to protect the finish against abrasion and corrosion.

6. "Three-Piece Can Side-Seam Spray" means a coating sprayed on the exterior and interior of a welded, cemented, or soldered seam to protect the exposed metal.

7. "Two-Piece Can Exterior End Coating" means a coating applied by roller coating or spraying to the exterior of a can to provide protection to the metal.

(b) This paragraph shall apply to coating applicator(s), flashoff area(s) and oven(s) of sheet, can, or end coating lines involved in sheet basecoat (exterior and interior) and overvarnish; two-piece can exterior (basecoat and overvarnish); two-piece and three-piece can interior body spray; two-piece can exterior end (spray or roll coat); three-piece can side-seam spray and end sealing compound operations.

(c) No owner or operator of a can coating line subject to this paragraph shall cause, allow, or permit the discharge into the atmosphere of any VOCs in excess of:

1. 0.34 kilograms per liter of coating (2.8 pounds per gallon), excluding water, delivered to the coating applicator from sheet basecoat (exterior and interior) and overvarnish or two-piece can exterior (basecoat and overvarnish) operations;

2. 0.51 kilograms per liter of coating (4.2 pounds per gallon), excluding water, delivered to the coating applicator from the two-piece and three-piece can interior body spray and two-piece can exterior end (spray or roll coat) operations;

3. 0.66 kilograms per liter of coating (5.5 pounds per gallon), excluding water, delivered to the coating applicator from three-piece can side seam spray operations; and

4. 0.44 kilograms per liter of coating (3.7 pounds per gallon), excluding water, delivered to the coating applicator from end sealing compound operations.

(2) Coil Coating.

(a) For the purpose of this paragraph, the following definitions apply:

1. "Coil Coating" means the coating of any flat metal sheet or strip that comes in rolls or coils.

2. "Quench Area" means a chamber where the hot metal exiting the oven is cooled by either a spray of water or a blast of air followed by water cooling.

(b) This paragraph shall apply to the coating applicator(s), oven(s), and quench area(s) of coil coating lines involved in prime and top coat or single coat operations.

(c) No owner or operator of a coil coating line subject to this paragraph shall cause, allow, or permit the discharge into the atmosphere of VOCs in excess of 0.31 kilograms per liter of coating (2.6 pounds per gallon), excluding water, delivered to the coating applicator from prime and topcoat or single coat operations.

(3) Metal Furniture Coating.

(a) For the purpose of this paragraph, the following definitions apply:

1. "Application Area" means the area where the coating is applied by spraying, dipping, or flowcoating techniques.

2. "Metal Furniture Coating" means the surface coating of any furniture made of metal or any metal part which will be assembled with other metal, wood, fabric, plastic, or glass parts to form a furniture piece.

(b) This paragraph shall apply to the application areas, flashoff area(s), and oven(s) of metal furniture coating lines involved in prime and topcoat or single coating operations.

(c) No owner or operator of a metal furniture coating line subject to this paragraph shall cause, allow, or permit the discharge into the atmosphere of any VOCs in excess of 0.36 kilograms per liter of coating (3.0 pounds per gallon), excluding water, delivered to the coating applicator from prime and topcoat or single coat operations.

(4) Surface Coating of Large Appliances.

(a) For the purpose of this paragraph, the following definitions apply:

1. "Application Area" means the area where the coating is applied by spraying, dipping, or flowcoating techniques.

2. "Single Coat" means a single film of coating applied directly to the metal substrate omitting the primer application.

3. "Large Appliances" means doors, cases, lids, panels, and interior support parts of residential and commercial washers, dryers, ranges, refrigerators, freezers, water heaters, dishwashers, trash compactors, air conditioners, and other similar products.

(b) This paragraph shall apply to application area(s), flashoff area(s), and oven(s) of large appliance coating lines involved in prime, single, or topcoat coating operations.

(c) This paragraph shall not apply to the use of quick-drying lacquers for repair of scratches and nicks that occur during assembly, provided that the volume of coating does not exceed 757 liters (200 gallons) in any one year.

(d) No owner or operator of a large appliance coating line subject to this paragraph shall cause, allow, or permit the discharge into the atmosphere of any VOCs in excess of 0.34 kilograms per liter of coating (2.8 pounds per gallon), excluding water, delivered to the coating applicator from prime, single, or topcoat coating operations.

(5) Reserved.

(6) Paper Coating.

(a) For the purpose of this paragraph, the following definitions apply:

1. "Knife Coating" means the application of a coating material to a substrate by means of drawing the substrate beneath a knife that spreads the coating evenly over the full width of the substrate.

2. "Paper Coating" means coatings put on paper and pressure sensitive tapes regardless of substrate. Related web coating processes on plastic film and decorative coatings on metal foil are included in this definition. Paper coating includes, but is not limited to, application by impregnation or saturation or by the use of roll, knife, or rotogravure coating.

3. "Roll Coating" means the application of a coating material to a substrate by means of hard rubber or steel rolls.

4. "Rotogravure Coating" means the application of a coating material to a substrate by means of a roll coating technique in which the pattern to be applied is etched on the coating roll. The coating material is picked up in these recessed areas and is transferred to the substrate.

(b) This paragraph shall apply to roll, knife, or rotogravure coater(s), flashoff areas, and drying ovens of paper coating lines. This paragraph shall also apply to other application and drying systems of paper coating lines.

(c) No owner or operator of a paper coating line subject to this paragraph shall cause, allow, or permit the discharge into the atmosphere of any VOCs in excess of 0.35 kilograms per liter of coating (2.9 pounds per gallon), excluding water, delivered to the coating applicator from a paper coating line.

(7) Fabric and Vinyl Coating.

(a) For the purpose of this paragraph, the following definitions apply:

1. "Fabric Coating" means the coating of a textile substrate with a knife, roll, or rotogravure coater to impart properties that are not initially present, such as strength, stability, water or acid repellancy, or appearance. Fabric coating includes, but is not limited to, application by impregnation or saturation or by the use of roll, knife, or rotogravure coating.

2. "Knife Coating" means the application of a coating material to a substrate by means of drawing the substrate beneath a knife that spreads the coating evenly over the full width of the substrate.

3. "Roll Coating" means the application of a coating material to a substrate by means of hard rubber or steel rolls.

4. "Rotogravure Coating" means the application of a coating material to a substrate by means of a roll coating technique in which the pattern to be applied is etched on the coating roll. The coating material is picked up in these recessed areas and is transferred to the substrate.

5. "Vinyl Coating" means to apply a decorative or protective or functional topcoat or printing on vinyl coated fabric or vinyl sheets. Vinyl plastisol shall not be considered a vinyl coating when it is applied to a fabric to form the substrate that is subsequently coated.

(b) This paragraph shall apply to roll, knife, or rotogravure coater(s), flashoff areas, and drying ovens of fabric and vinyl coating lines. This paragraph shall also apply to other application and drying systems of fabric and vinyl coating lines.

(c) No owner or operator of a fabric coating line or a vinyl coating line subject to this paragraph shall cause, allow, or permit discharge into the atmosphere of any VOCs in excess of:

1. 0.35 kilograms per liter of coating (2.9 pounds per gallon), excluding water, delivered to the coating applicator from a fabric coating line; and

2. 0.45 kilograms per liter of coating (3.8 pounds per gallon), excluding water, delivered to the coating applicator from a vinyl coating line.

(8) Magnet Wire Coating.

(a) For the purpose of this paragraph, the following definition applies:

1. "Magnet Wire Coating" means the process of applying a coating of electrically insulating varnish or enamel to aluminum or copper wire for use in electrical machinery.

(b) This paragraph shall apply to oven(s) of magnet wire coating operations.

(c) No owner or operator of a magnet wire coating oven subject to this paragraph shall cause, allow, or permit the discharge into the atmosphere of any VOCs in excess of 0.20 kilograms per liter of coating (1.7 pounds per gallon), excluding water, delivered to the coating applicator from magnet wire coating operations.

(9) Compliance Methods.

(a) The emission limits under this rule may be achieved by:

1. the application of low solvent content coating technology; or

2. the installation and operation of a VOC capture system and a VOC control device system provided that each day the overall VOC emission reduction efficiency needed to demonstrate compliance with the applicable emission rate restriction is achieved; or

3. the application of powder coating technology; or

4. The Director may allow a coating line that has no add-on VOC control equipment to average two or more coatings under all the following conditions:

(i) The surface coating shall be for the same type of operation (source category) and shall be subject to the same regulated emission rate restriction; and

(ii) The surface coatings shall be delivered to the application system on the same coating line; and

(iii) The surface coatings shall be averaged on the basis of pounds of VOC emitted per gallon of coating solids applied to the substrate; and

(iv) The compliance demonstration time frame shall be a twenty-four (24) hour period (calendar day); and

(v) The VOC emissions shall be equal to or less than those emitted when all the surface coatings delivered to the application system comply with the applicable regulated VOC emission rate restriction.

(10) Flatwood Paneling.

(a) For the purpose of this paragraph, the following definitions apply:

1. "Class II Hardboard Paneling Finish" means finishes which meet the specifications of Voluntary Product Standard PS-59-73 as approved by the American National Standards Institute.

2. "Hardboard" means a panel manufactured primarily from inter-felted lino-cellulosic fibers which are consolidated under heat and pressure in a hot press.

3. "Hardwood plywood" means plywood whose surface layer is a veneer of hardwood.

4. "Natural Finish Hardwood Plywood Panels" mean panels whose original grain pattern is enhanced by essentially transparent finishes frequently supplemented by filters and toners.

5. "Thin Particle Board" is a manufactured board 1/4 inch or less in thickness made of individual wood particles which have been coated with a binder and formed into flat sheets by pressure.

6. "Printed Interior Panels" mean panels whose grain or natural surface is obscured by fillers and basecoats upon which a simulated grain or decorative pattern is printed.

7. "Tileboard" means paneling that has a colored waterproof surface coating.

8. "Coating Application System" means all operations and equipment which apply, convey, and dry a surface coating, including, but not limited to, spray booths, flow coaters, conveyors, flashoff areas, air dryers, and ovens.

(b) This paragraph shall apply to all flatwood manufacturing facilities that manufacture the following products:

1. printed interior panels made of hardwood, plywood, and thin particle board;

2. natural finish hardwood plywood panels; or

3. hardboard paneling with Class II finishes.

(c) This paragraph shall not apply to the manufacture of exterior siding, tileboard, or particleboard used as a furniture component.

(d) No owner or operator of a flatwood manufacturing facility subject to this paragraph shall emit VOCs from a coating application system in excess of:

1. 2.9 kilograms per 100 square meters of coated finished product (6.0 pounds per 1,000 square feet) from printed interior panels, regardless of the number of coats applied;

2. 5.8 kilograms per 100 square meters of coated finished product (12.0 pounds per 1,000 square feet) from natural finish hardwood plywood panels, regardless of the number of coats applied; and

3. 4.8 kilograms per 100 square meters of coated finished product (10.0 pounds per 1,000 square feet) from Class II finishes on hardboard panels, regardless of the number of coats applied.

(11) Miscellaneous Metal Parts and Products.

(a) For the purpose of this paragraph, the following definitions apply:

1. "Air Dried Coating" means coatings which are dried by the use of air or forced warm air at temperatures up to 90 °C (194 °F).

2. "Clear Coat" means a coating which lacks color and opacity or is transparent and uses the undercoat as a reflective base or undertone color and any coating used as a interior protective lining on any cylindrical metal shipping container of greater than one gallon capacity.

3. "Coating Application System" means all operations and equipment which applies, conveys, and dries a surface coating, including, but not limited to, spray booths, flow coaters, flashoff areas, air dryers and ovens.

4. "Extreme Environmental Conditions" means exposure to any one of the following; the weather all of the time, temperatures consistently above 95 °C (203 °F), detergents, abrasive and scouring agents, solvents, corrosive atmospheres, or similar environmental conditions.

5. "Extreme Performance Coatings" means coatings designed for harsh exposure or extreme environmental conditions.

6. "Heat Sensitive Material" means materials which cannot consistently be exposed to temperatures greater than 95 °C (203 °F).

7. "Low Solvent Coating" means coatings which contain less organic solvent than the conventional coatings used by the industry. Low solvent coatings include water-borne, higher solids, electrodeposition and powder coatings.

8. "Powder Coating" means any surface coating which is applied as a dry powder and is fused into a continuous coating film through the use of heat.

9. "Single Coat" means one film of coating applied to a metal surface.

(b) This paragraph shall apply to coating of miscellaneous metal parts and products in the following industries:

1. large farm machinery (harvesting, fertilizing and planting machines, tractors, combines, etc.);

2. small farm machinery (lawn and garden tractors, lawn mowers, rototillers, etc.);

3. small appliances (fans, mixers, blenders, crock pots, dehumidifiers, vacuum cleaners, etc.);

4. commercial machinery (office equipment, computers and auxiliary equipment, typewriters, calculators, vending machines, etc.);

5. industrial machinery (pumps, compressors, conveyor components, fans, blowers, transformers, etc.);

6. fabricated metal products (metal covered doors, frames, etc.); and

7. any other industrial category which coats metal parts or products under the Standard Industrial Classification Code of Major Group 33 (primary metal industries), Major Group 34 (fabricated metal products), Major Group 35 (nonelectric machinery), Major Group 36 (electrical machinery), Major Group 37 (transportation equipment), Major Group 38 (miscellaneous instruments), Major Group 39 (miscellaneous manufacturing industries), Major Group 40 (railroad transportation), and Major Group 41 (transit passenger transportation).

(c) This paragraph shall not apply to the surface coating of the following metal parts and products:

1. automobiles and light-duty trucks;

2. metal cans;

3. flat metal sheets and strips in the form of rolls or coils;

4. magnet wire for use in electrical machinery;

5. metal furniture;

6. large appliances;

7. exterior of airplanes;

8. automobile refinishing;

9. customized coating of automobiles and trucks, if production is less than 35 vehicles per day and if the VOC emission rate from the customized coating operation does not exceed 60 tons per year based on an annual rolling average calculated at the end of each calendar month; and

10. exterior of marine vessels.

11. fabricated metal parts and products under the major Standard Industrial Classification Code of Group No. 34 if the VOC emissions rate is less than a potential ten tons per calendar year (10 TPY) before an add-on VOC control device.

(d) This paragraph shall apply to the application area(s), flashoff area(s), air and forced air dryer(s) and oven(s) used in the surface coating of the metal parts and products in subparagraph (b) of this paragraph. This paragraph also applies to prime coat, top coat, and single coat operations.

(e) No owner or operator of a facility engaged in the surface coating of miscellaneous metal parts and products shall operate a coating application system subject to this paragraph that emits VOCs in excess of:

1. 0.52 kilograms per liter (4.3 pounds per gallon) of coating, excluding water, delivered to a coating applicator that applies clear coatings;

2. 0.42 kilograms per liter (3.5 pounds per gallon) of coating, excluding water, delivered to a coating applicator in a coating application system that is air dried or forced warm air dried at temperatures up to 90 °C (194 °F);

3. 0.42 kilograms per liter (3.5 pounds per gallon) of coating, excluding water, delivered to a coating applicator that applies extreme performance coatings;

4. 0.36 kilograms per liter (3.0 pounds per gallon) of coating, excluding water, delivered to a coating applicator for all other coatings and coating application systems, excluding powder coating systems; and

5. 0.05 kilograms per liter (0.4 pounds per gallon) of coating, excluding water, delivered to a coating applicator for all powder coating systems.

(f) If add-on control equipment is used, continuous monitors of the following parameters shall be installed, periodically calibrated, and operated at all times that the associated control equipment is operating:

1. exhaust gas temperature of all incinerators;

2. temperature rise across a catalytic incinerator bed;

3. breakthrough of VOC on a carbon adsorption unit; and

4. any other continuous monitoring or recording device required by the Director.

(12) Recordkeeping.

(a) The owner or operator of a coating line subject to the requirements in this rule shall maintain as a minimum the following daily records to demonstrate compliance in the time frame required by any regulation under this rule or Air Permit condition:

1. the quantity in gallons of all surface coatings delivered to the application system; and

2. the quantity in gallons of all organic liquid diluents (coating thinners and additives) added to the surface coatings; and

3. the quantity in gallons of all organic liquid solvents used for wash or cleanup; and

4. the quantity in gallons of all organic liquid waste properly contained and shipped out for proper disposal and a certification of the waste density and percent VOC content by weight; and

5. the date of each application of surface coatings and diluents and usage of wash and cleanup solvents; and

6. the regulation(s) applicable to the coating line for which the records are being maintained; and

7. the daily records shall be kept in the units necessary to verify compliance with the applicable regulations (i.e., pounds of VOC per gallon of coating delivered to the application system, excluding water and exempt VOC); and

8. the application method and the substrate material type; and

9. where applicable, the surface coating curing and/or drying oven temperature(s) in degrees Fahrenheit; and

10. where applicable, the continuous combustion temperature in degrees Fahrenheit of a thermal incinerator control system; and

11. where applicable, the temperature rise across the catalyst bed and exhaust temperature in degrees Fahrenheit of a catalytic incinerator control system; and

12. where applicable, the inlet and outlet temperature in degrees Fahrenheit of the cooling medium of a condenser control system; and

13. the following information on all surface coatings, and organic liquid solvents (diluents, additives, wash and cleanup):

(i) manufacturer (supplier); and

(ii) product name and manufacturer's code number; and

(iii) density (pounds per gallon); and

(iv) VOC content in percent weight and volume; and

(v) solids content in percent weight and volume; and

(vi) water content in percent weight and volume; and

(vii) exempt VOC content in percent weight and volume; and

(viii) pounds of VOC per gallon of coating delivered to the application system, excluding water and exempt VOC.

(b) The compliance demonstration time frame for an individual coating line that applies coatings that are subject to the same regulated VOC emission rate under this rule shall be a twenty-four (24) hour period (calendar day).

(c) The daily records required under subparagraph (a) of this paragraph shall be retained by the owner or operator at the location of the regulated source for a minimum of two years after the date of record and shall be available to representatives of the Director upon request.

(d) The recordkeeping provisions of subparagraph (a) of this paragraph shall not apply if the Director determines that alternative records would be sufficient to provide assurance that the source is operating in compliance on a twenty-four (24) hour basis and these alternative requirements are incorporated as permit conditions for the source. In no case can recordkeeping requirements be waived or the stringency of the emissions limit be relaxed.

Author:
Statutory Authority: Code of Alabama 1975, §§22-28-14, 22-22A-5, 22-22A-6, and 22-22A-8.
History: Effective Date: June 9, 1987.
Amended: September 21, 1989; July 31, 1991; October 24, 1991; November 21, 1996.

335-3-6-.33 Solvent Metal Cleaning.

(1) For the purpose of this rule, the following definitions apply:

(a) "Cold Cleaning" means the batch process of cleaning and removing soils from metal surfaces by spraying, brushing, flushing or immersion while maintaining the solvent below its boiling point. Wipe cleaning is not included in this definition.

(b) "Conveyorized Degreasing" means the continuous process of cleaning and removing soils from metal surfaces by operating with either cold or vaporized solvents.

(c) "Freeboard Height" means for cold cleaner, the distance from the liquid solvent level or solvent drain in the degreaser tank to the lip of the tank. For vapor degreasers, it is the distance from the solvent vapor-air interface in the tank to the lip of the tank.

(d) "Freeboard Ratio" means the freeboard height divided by the width of the degreaser.

(e) "Open Top Vapor Degreasing" means the batch process of cleaning and removing soils from metal surfaces by condensing hot solvent vapor on the cold metal parts.

(f) "Solvent Metal Cleaning" means the process of cleaning soils from metal surfaces by cold cleaning or open top vapor degreasing or conveyorized degreasing.

(2) This rule shall apply to cold cleaning, open top vapor degreasing and conveyorized degreasing operations.

(3) The provisions shall apply with the following exceptions:

(a) Open top vapor degreasers with an open area smaller than one (1) square meter (10.8 square feet) shall be exempt from subparagraphs (5)(c)2. and 4. of this rule.

(b) Conveyorized degreasers with an air/vapor interface smaller than 2.0 square meters (21.6 square feet) shall be exempt from subparagraph (6)(b) of this rule.

(4) Except as provided under paragraph (3) of this rule, the owner or operator of a cold cleaning device shall:

(a) equip the cleaner with a cover and the cover shall be so designed that it can be easily operated with one hand; if,

1. the solvent volatility is greater than 2 kPa (15 mm Hg or 0.3 psi) measured at 38 °C (100 °F); or

2. the solvent is agitated; or

3. the solvent is heated;

(b) equip the cleaner with a device for draining cleaned parts; and if the solvent volatility is greater than 4.3 kPa (32 mm Hg or 0.6 psi) measured at 38 °C (100 °F), construct the drainage device internally so that the parts are enclosed under the cover while draining, except that the drainage device may be external for applications where an internal type cannot fit into the cleaning system;

(c) if the solvent volatility is greater than 4.3 kPa (32 mm Hg or 0.6 psi) measured at 38 °C (100 °F) or if the solvent is heated above 50 °C (120 °F), install one of the following devices:

1. freeboard that gives a freeboard ratio greater than or equal to 0.7; or

2. water cover (solvent must be insoluble in and heavier than water); or

3. other equipment systems of equivalent control, such as refrigerated chiller or carbon adsorption, approved by the Director;

(d) provide a permanent, conspicuous label, summarizing the operating requirements;

(e) close the cover whenever parts are not being handled in the cleaner;

(f) drain the cleaned parts for at least 15 seconds or until dripping ceases;

(g) if used, supply a solvent spray that is a solid fluid stream (not a fine, atomized, or shower type spray) at a pressure which does not cause excessive splashing; and

(h) store waste solvent only in covered containers and not dispose of waste solvent or transfer it to another party, such that greater than twenty percent (20%) of the waste solvent (by weight) can evaporate into the atmosphere.

(5) Except as provided under paragraph (3) of this rule, the owner or operator of an open top vapor degreaser shall;

(a) equip the vapor degreaser with a cover that can be opened and closed easily without disturbing the vapor zone; and

(b) provide the following safety switches:

1. a condenser flow switch and thermostat which shuts off the heat if the condenser coolant is either not circulating or too warm;

2. a spray safety switch which shuts off the spray pump if the vapor level drops more than l0 centimeters (4 inches) below the bottom of the condenser coil; and

3. a vapor level control thermostat which shuts off the heat when the level rises too high.

(c) install one of the following control devices:

1. a freeboard ratio of greater than or equal to 0.75 and a powered or mechanically assisted cover if the degreaser opening is greater than 1 square meter (10.8 square feet); or

2. refrigerated chiller; or

3. enclosed design (cover or door opens only when the dry part is actually entering or exiting the degreaser); or

4. carbon adsorption system, with ventilation greater than or equal to 15 cubic meters per minute per square meter (50 cubic feet per minute per square foot) of air/vapor area (when cover is open) and exhausting less than 25 parts per million of solvent averaged over one complete adsorption cycle; or

5. a control equipment system, demonstrated to have control efficiency equivalent to or greater than any of the above and approved by the Director;

(d) keep the cover closed at all times except when processing work loads through the degreaser;

(e) minimize solvent carryout by:

1. racking parts to allow complete drainage;

2. moving parts in and out of the degreaser at less than 3.3 meters per minute (11 feet per minute);

3. holding the parts in the vapor zone at least 30 seconds or until condensation ceases;

4. tipping out any pools of solvent on the cleaned parts before removal from the vapor zone;

5. allowing parts to dry within the degreaser for at least 15 seconds or until visually dry;

(f) not degrease porous or absorbent materials, such as cloth, leather, wood or rope;

(g) not occupy more than half of the degreaser's open top area with a workload;

(h) not load the degreaser to the point where the vapor level would drop more than 10 centimeters (4 inches) below the bottom of the condenser coil when the workload is lowered into the vapor zone;

(i) always spray below the vapor level;

(j) repair solvent leaks immediately, or shutdown the degreaser;

(k) store waste solvent only in covered containers and not dispose of waste solvent or transfer it to another party, such that greater than twenty percent (20%) of the waste solvent (by weight) can evaporate into the atmosphere;

(l) not operate the cleaner so as to allow water to be visually detectable in solvent exiting in the water separator;

(m) not use ventilation fans near the degreaser opening nor provide exhaust ventilation exceeding 20 cubic meters per minute per square meter (65 cubic feet per minute per square foot) of degreaser open area, unless necessary to meet OSHA requirements; and

(n) provide a permanent, conspicuous label, summarizing the operating requirements.

(6) Except as provided under paragraph (3) of this rule, the owner or operator of a conveyorized degreaser shall:

(a) not use workplace fans near the degreaser opening nor provide exhaust ventilation exceeding 20 cubic meters per minute per square meter (65 cubic feet per minute per square foot) of degreaser opening, unless necessary to meet OSHA requirements;

(b) install one of the following control devices:

1. refrigerated chiller; or

2. carbon adsorption system with ventilation greater than or equal to 15 cubic meters per minute per square meter (50 cubic feet per minute per square foot) of air/vapor area (when downtime covers are open), and exhausting less than 25 parts per million of solvent by volume averaged over a complete adsorption cycle; or

3. a control equipment system demonstrated to have a control efficiency equivalent to or greater than subparagraphs (b)1. or (b)2. of this paragraph and approved by the Director;

(c) equip the cleaner with equipment, such as drying tunnel or rotating (tumbling) basket sufficient to prevent cleaned parts from carrying out solvent liquid or vapor;

(d) provide the following safety switches:

1. a condenser flow switch and thermostat which shut off the heat if the condenser is either not circulating or too warm;

2. a spray safety switch which shuts off the spray pump or the conveyor if the vapor level drops more than 10 centimeters (4 inches) below the bottom of the condenser; and

3. a vapor level control thermostat which shuts off the heat when the level rises too high;

(e) minimize openings during operation so that entrances and exits will silhouette workloads with an average clearance between the parts and the edge of the degreaser opening of less than ten centimeters (4 inches) or less than ten percent (10%) of the width of the opening;

(f) provide downtime covers for closing off the entrance and exit during the shutdown hours;

(g) minimize carryout emissions by:

1. racking parts for best drainage; and

2. maintaining the vertical conveyor speed at less than 3.3 meters per minute (11 feet per minute);

(h) store waste solvent only in covered containers;

(i) repair solvent leaks immediately, or shut down the degreasers;

(j) not operate the cleaner so as to allow water to be visually detectable in solvent exiting the water separator; and

(k) place downtime covers over entrances and exits of conveyorized degreasers immediately after the conveyors and exhaust are shut down and not remove them until just before start-up.

Author:
Statutory Authority: Code of Alabama 1975, §§22-28-14, 22-22A-5, 22-22A-6, and 22-22A-8.
History: Effective Date: June 9, 1987.
Amended: July 31, 1991; November 21, 1996.

335-3-6-.34 Cutback and Emulsified Asphalt.

(1) For the purpose of this rule, the following definitions apply:

(a) "Asphalt" means a dark brown to black cementitious material (solid, semisolid, or liquid in consistency) in which the predominating constituents are bitumens which occur in nature as such or which are obtained as residue in refining petroleum.

(b) "Cutback Asphalt" means asphalt cement which has been liquefied by blending with petroleum solvents (diluents). Upon exposure to atmospheric conditions, the diluents evaporate, leaving the asphalt cement to perform its function.

(c) "Penetrating Prime Coat" means an application of low-viscosity liquid asphalt to an absorbent surface. It is used to prepare an untreated base for an asphalt surface. The prime penetrates the base and plugs the voids, hardens the top, and helps bind it to the overlying asphalt layer.

(d) "Emulsified Asphalt" means asphalt cement which has been liquefied by blending it with water and an emulsifying agent. Upon exposure to atmospheric conditions, the water and emulsifying agency evaporate, leaving the asphalt cement to perform its function.

(e) "ASTM" is an acronym for American Society for Testing and Materials. This organization publishes reference test methods.

(2) This rule shall apply to the manufacture and use of cutback and emulsified asphalts in highway paving and maintenance operations in Jefferson county.

(3) No person may cause, allow, or permit the sale or offering for sale, mixing, storage, use, or application of cutback asphalts except where:

(a) long-time stockpile storage is necessary; or

(b) the use or application commences in December of any year and such use or application is completed by the end of February of the following year; or

(c) the cutback asphalt is to be used solely as a penetrating prime coat.

(4) The mixing, storage, use or application of emulsified asphalt in highway and maintenance operations in Jefferson County shall be allowed at all times if the maximum oil distillate (organic solvent) content in the emulsified asphalt does not exceed seven percent (7%) as determined by ASTM distillation test method D-244. If the maximum oil distillate in the emulsified asphalt exceeds seven percent (7%), the mixing, storage, use or application of said asphalt is limited to January, February, and December.

(5) Recordkeeping Requirements.

(a) The manufacturer of cutback or emulsified asphalt shall maintain a current record in a format approved by the Director of each batch of cutback or emulsified asphalt produced. The record shall contain the following information as a minimum:

1. The calendar date that the batch was produced; and,

2. The quantity in tons produced; and,

3. The customer's name and address to where the cutback or emulsified asphalt was sent; and,

4. For emulsified asphalt only, the oil distillate (organic solvent) content as determined by ASTM distillation test method D-244. The Director may accept, instead of ASTM test method D-244, a certification by the emulsified asphalt manufacturer of the composition of the batch if supported by actual batch formulation records.

(b) The record required in subparagraph (a) of this paragraph shall be maintained on file for a minimum of two years after the date of record and shall be made available to the Director upon request.

(c) The recordkeeping provisions of this paragraph shall not apply if the Director determines that alternative records would be sufficient to provide assurance that the source is operating in compliance on a twenty-four (24) hour basis and these alternative requirements are incorporated as permit conditions

for the source. In no case can recordkeeping requirements be waived or the stringency of the emissions limit be relaxed.

Author:
Statutory Authority: Code of Alabama 1975, §§22-28-14, 22-22A-5, 22-22A-6, and 22-22A-8.
History: Effective Date: June 9, 1987.
Amended: July 31, 1991; November 21, 1996.

335-3-6-.35 Petition for Alternative Control Strategies.

(1) Notwithstanding any requirements under this chapter, an owner or operator of a VOC source may petition the Director for a source-specific State Implementation Plan (SIP) revision on a case-by case basis to establish an alternative control strategy not specifically allowed under this chapter. Alternative control strategies include the establishment of a source-specific reasonably available control technology, a change in operational procedures, new and innovative control techniques, and crossline averaging of one or more point sources within a facility (plantwide bubble).

(2) The methods and procedures of petitioning for a source-specific SIP revision shall be in accordance with all requirements of the Federal Act, Code of Federal Regulations, U. S. Environmental Protection Agency (EPA) policies, Alabama Department of Environmental Management Air Regulations, and the Jefferson County Board of Health Air Pollution Control Rules and Regulations. Any questions regarding the methods and procedures of petitioning shall be directed to the Jefferson County Department of Health Air Pollution Control Program.

(3) The petition package for a source-specific SIP revision shall be obtained from the Jefferson County Department of Health Air Pollution Control Program.

(4) Only completed petitions containing all the necessary documentation to evaluate the source-specific SIP revision will be processed by the Jefferson County Department of Health Air Pollution Control Program to be considered by the Director. No petition will become effective prior to its approval by EPA as a source-specific SIP revision.

(5) Any VOC source which submitted a completed application package to the Director prior to November 9, 1987 for a crossline averaging strategy shall not be required to petition for an EPA approved source-specific SIP revision. The affected source(s) shall operate under the provisions of their respective Air Permit Conditions.

Author:
Statutory Authority: Code of Alabama 1975, §§22-28-14, 22-22A-5, 22-22A-6, and 22-22A-8.
History: Effective Date: June 9, 1987.
Amended: July 31, 1991.

335-3-6-.36 Compliance Schedules.

(1) Process and Emission Control Equipment Installations.

(a) Except as provided under paragraphs (4) or (5) of this rule, the owner or operator of a VOC emission source proposing to install and operate VOC emission control equipment and/or replacement process equipment to comply with this chapter shall adhere to the increments of progress contained in the following schedule:

1. Final plans for the emission control system and/or process equipment shall be submitted within three (3) months of Jefferson County Board of Health promulgation.

2. Contracts for the emission control system and/or process equipment shall be awarded or orders must be issued for purchase of component parts to accomplish emission control within six (6) months of Jefferson County Board of Health promulgation.

3. Initiation of on-site construction or installation of the emission control and/or process equipment shall begin within nine (9) months of Jefferson County Board of Health promulgation.

4. On-site construction or installation of the emission control and/or process equipment shall be completed within fifteen (15) months of Jefferson County Board of Health promulgation.

5. Final compliance shall be achieved within sixteen (16) months of Jefferson County Board of Health promulgation.

(b) Any owner or operator of an emission source subject to the compliance schedule of this rule shall certify to the Director within five (5) days after the deadline for each increment of progress, whether the required increment of progress has been met.

(2) Low Solvent Content Coating.

(a) Except as provided under paragraphs (4) or (5) of this rule or under subparagraph (b) of this paragraph, the owner or operator of a VOC emission source proposing to employ low solvent content coating technology to comply with this chapter shall adhere to the increments of progress contained in the following schedules:

1. Final plans for the application of low solvent content coating technology shall be submitted within three (3) months of Jefferson County Board of Health promulgation.

2. Research and development of low solvent content coating shall be completed within six (6) months of Jefferson County Board of Health promulgation.

3. Evaluation of product quality and commercial acceptance shall be completed within one (1) year of Jefferson County Board of Health promulgation. A determination of product unacceptability will trigger orders for add-on control equipment.

4. Purchase orders shall be issued for low solvent coatings and process modifications within fifteen (15) months of Jefferson County Board of Health promulgation. Purchase orders for add-on controls necessitated under subparagraph (a)3. of this paragraph shall be issued within twelve (12) months of Jefferson County Board of Health promulgation.

5. Initiation of process modification for low solvent coating application shall begin within seventeen (17) months of Jefferson County Board of Health promulgation. Initiation of construction or installation of add-on controls necessitated under subparagraph (a)3. of this paragraph shall begin within fifteen (15) months of Jefferson County Board of Health promulgation.

6. Process modifications for low solvent coating application shall be completed and use of low solvent coatings shall begin within twenty-two (22) months of Jefferson County Board of Health promulgation. On-site construction or installation of add-on controls necessitated under subparagraph (a)3. of this paragraph shall be completed within twenty-two (22) months of Jefferson County Board of Health promulgation.

7. Final compliance shall be achieved within two (2) years of Jefferson County Board of Health promulgation. In no case, shall final compliance be allowed beyond December 31, 1987.

(b) Where the Director determines that low solvent content coating technology has been sufficiently researched and developed for a particular application, the owner or operator of a VOC emission source proposing to comply with this chapter through application of low solvent content coatings shall adhere to the increments of progress contained in the following schedule:

1. Final plans for the application of low solvent content coating technology shall be submitted within three (3) months of Jefferson County Board of Health promulgation;

2. evaluation of product quality and commercial acceptance shall be completed within six (6) months of Jefferson County Board of Health promulgation;

3. purchase orders shall be issued for low solvent content coatings and process modifications within nine (9) months of Jefferson County Board of Health promulgation;

4. initiation of process modifications shall begin within eleven (11) months of Jefferson County Board of Health promulgation;

5. process modifications shall be completed and use of low solvent content coatings shall begin within fifteen (15) months of Jefferson County Board of Health promulgation; and

6. final compliance shall be achieved within sixteen (16) months of Jefferson County Board of Health promulgation.

(c) Any owner or operator of a stationary source subject to the compliance schedule of this rule shall certify to the Director within five (5) days after the deadline for each increment of progress, whether the required increment of progress has been met.

(3) Equipment Modification.

(a) Except as provided under paragraphs (4) or (5) of this rule, the operator or owner of a VOC emission source proposing to comply with this chapter by modification of existing processing equipment shall adhere to the increments of progress contained in the following schedule:

1. final plans for process modification shall be submitted within three (3) months of Jefferson County Board of Health promulgation;

2. contracts for process modifications shall be awarded or orders shall be issued for the purchase of component parts to accomplish process modifications within five (5) months of Jefferson County Board of Health promulgation;

3. initiation of on-site construction or installation of process modifications shall begin within seven (7) months of Jefferson County Board of Health promulgation;

4. on-site construction or installation of process modifications shall be completed within ten (10) months of Jefferson County Board of Health promulgation; and

5. final compliance shall be achieved within eleven (11) months of Jefferson County Board of Health promulgation.

(b) Any owner or operator of an emission source subject to the compliance schedule of this rule shall certify to the Director within five (5) days after the deadline for each increment of progress, whether the required increment of progress has been met.

(4) Alternative Compliance Schedules.

(a) Nothing in this rule shall prevent the Director from approving a separate schedule for any source, if he finds that the application of a compliance schedule in paragraphs (1) through (3) of this rule would be infeasible or impracticable.

(b) Nothing in this rule shall prevent the owner or operator of a VOC source from submitting to the Director a proposed alternative compliance schedule provided:

1. the proposed alternative compliance schedule is submitted within three (3) months of Jefferson County Board of Health promulgation;

2. the final control plans for achieving compliance with this chapter are submitted simultaneously;

3. the alternative compliance schedule contains the same increments of progress as the schedule for which it is proposed; and

4. sufficient documentation and certification from appropriate suppliers, contractors, manufacturers, or fabricators are submitted by the owner or operator of the VOC source to justify the dates proposed for the increments of progress.

(c) All alternative compliance schedules proposed or promulgated under this rule shall provide for compliance of the VOC emission source with this chapter as expeditiously as practicable, but not later than three years beyond promulgation by the Jefferson County Board of Health.

(d) Any compliance schedule approved under this rule may be revoked at any time if the source does not meet the increments of progress stipulated.

(e) Any owner or operator of an emission source subject to the compliance schedule of this rule shall certify to the Director within five (5) days after the deadline for each increment of progress, whether the required increment of progress has been met.

(5) Exception. Paragraphs (1) through (4) of this rule shall not apply to sources which are in compliance with this chapter prior to the date of Jefferson County Board of Health promulgation of this chapter and have determined and certified compliance to the satisfaction of the Director within three (3) months of Jefferson County Board of Health promulgation.

(6) Coke By-Product Recovery Plant Equipment Leaks.

(a) Owners or operators of coke by-product recovery plants shall adhere to the following increments of progress contained in the following schedule:

1. final plans for the initial leak check and inspection program required by rule 335-3-6-.47(3) shall be submitted within one (1) month of Jefferson County Board of Health promulgation; and

2. initiation of the leak check and inspection program required by rule 335-3-6-.47(3) shall begin within three (3) months of Jefferson County Board of Health promulgation.

(b) Any owner or operator of a coke by-product recovery plant subject to the compliance schedule of this rule shall certify to the Director within five (5) days after the deadline for each increment of progress, whether the required increment of progress has been met.

Author:
Statutory Authority: Code of Alabama 1975, §§22-28-14, 22-22A-5, 22-22A-6, and 22-22A-8.
History: Effective Date: June 9, 1987.
Amended: July 31, 1991; November 21, 1996.

335-3-6-.37 Test Methods and Procedures.

(1) Determination of Volatile Organic Compound Content of Surface Coatings.

(a) This method shall apply to ink, paint, varnish, lacquer, and other surface coatings.

(b) For the purposes of this method, a representative sample of the surface coating shall be obtained at the point of delivery to the coater or any other point in the process that the Director approves.

(c) The volatile organic compound content of the sample shall be determined using the test procedures found in 40 CFR 60 (except that references to Administrator are changed to Director) and one of the following methods:

1. Reference Method 24.

2. Reference Method 24A.

3. The Director may accept, instead of the coating analysis methods required under subparagraphs (c)1. and 2. of this paragraph, a certification by the coating manufacturer of the composition of the coating if supported by actual batch formulation records. Also, the manufacturer's certification shall be consistent with EPA's document number 450/3-84-019, titled "Procedures for Certifying Quantity of Volatile Organic Compounds Emitted by Paint, Ink, and Other Coatings".

(d) A person proposing to conduct a VOC emissions test shall notify the Director of the intent to test not less than thirty (30) days before the proposed initiation of the tests so the Director may at his option observe the test. The notification shall contain the information required by, and be in a format approved by, the Director.

(2) Test Procedure for Determination of VOC Emissions from Bulk Gasoline Terminals.

(a) Applicability. This method shall be applicable to determining VOC emission rates at tank truck and trailer gasoline loading terminals employing vapor collection systems and either continuous or intermittent vapor control systems. This method is applicable to motor tank truck and trailer loading only as per rule 335-3-6-.29.

(b) Test Methods and Procedures. The Volatile Organic Compound emissions from Bulk Gasoline Terminals shall be determined by one of the following methods:

1. Test methods and procedures required in 40 CFR 60.503, Subpart XX.

2. Reference Method 25.

3. Reference Method 25A.

4. Reference Method 25B.

(c) A person proposing to conduct a VOC emissions test shall notify the Director of the intent to test not less than thirty (30) days before the proposed initiation of the tests so the Director may at his option observe the test. The notification shall contain the information required by, and be in a format approved by, the Director.

(3) Determination of Volatile Organic Compound Emission Control System Efficiency.

(a) The provisions of this rule shall be applicable to any test method employed to determine the collection or control efficiency of any device or system designed, installed, and operated for the purpose of reducing volatile organic compound emissions.

(b) An efficiency demonstration shall include, but not be limited to, the following methods and procedures:

1. The volatile organic compound containing material shall be sampled and analyzed by EPA approved methods and procedures under Appendix A of 40 CFR 60 such that the emissions that could result from the use of the material can be quantified. For paints, inks, and other related coatings, the

test methods and procedures shall be in accordance with paragraph (1) of this rule.

2. The efficiency of any capture system used to capture and transport the volatile organic compound emissions from their point of origination to the control equipment shall be determined in accordance with the test methods and procedures in paragraph (13) of this rule.

3. Samples of the volatile organic compound containing gas streams shall be taken simultaneously at the fugitives emission points from the permanent or temporary total enclosures, inlet and outlet of the emissions control device, and at least one centrally located point outside the permanent or temporary total enclosures and between the natural draft openings (background concentration).

4. The total combustible carbon content of the samples shall be determined by one of the following methods:

(i) Reference Method 25.

(ii) Reference Method 25A.

(iii) Reference Method 25B.

(iv) Reference Method 18.

5. the efficiency of the control device shall be expressed as the fraction of total combustible carbon content reduction achieved; and

6. the volatile organic compound mass emission rate shall be the sum of emissions from the control device, emissions not collected by the capture system, and capture system losses.

(c) A person proposing to conduct a VOC emission control system efficiency test shall notify the Director of the intent to test not less than thirty (30) days before the proposed initiation of the tests so the Director may at his option observe the test. The notification shall contain the information required by, and in a format approved by, the Director.

(d) The written results of any capture or control efficiency testing shall be submitted to the Director in an approved format within thirty (30) days after the date of the test. The written results shall also be retained at the location of the tested source for at least three (3) years after the date of the test.

(4) <u>Determination of Solvent Metal Cleaning Volatile Organic Compound Emissions</u>.

(a) This method shall be applicable to determining volatile organic compound emissions from solvent metal cleaning equipment.

(b) The purpose of this method is to quantify, by material balance, the amount of solvent input into a solvent metal cleaner over a sufficiently long period of time so that an average emission rate can be computed.

(c) The test methods and procedures shall be performed in accordance with those specified in EPA's control technique guideline document (EPA-450/2-77-.022) "Control of Volatile Organic Emissions from Solvent Metal Cleanings".

(d) A person proposing to conduct a VOC emissions test shall notify the Director of the intent to test not less than thirty (30) days before the proposed initiation of the tests so the Director may at his option observe the test. The notification shall contain the information required by, and be in a format approved by, the Director.

(5) Test Methods and Procedures for Perchloroethylene Dry Cleaning Systems.

(a) The provisions of this paragraph shall be applicable to any Perchloroethylene Dry Cleaning System.

(b) Test procedures to determine compliance with rule 335-3-6-.40 shall be consistent with one of the following guideline methods:

1. EPA Guideline Series document, "Measurement of Volatile Organic Compounds", EPA-450/2-78-041;

2. Appendix B of "Control of Volatile Organic Emissions from Perchloroethylene Dry Cleaning Systems", EPA-450/2-78-050; or

3. American National Standards Institute paper, "Standard Method of Test for Dilution of Gasoline Engine Crankcase Oils".

(c) A person proposing to conduct a VOC emissions test shall notify the Director of the intent to test not less than thirty (30) days before the proposed initiation of the tests so the Director may at his option observe the test. The notification shall contain the information required by, and be in a format approved by, the Director.

(6) Test Methods and Procedures for Graphic Arts.

(a) The owner or operator of a VOC source shall, at his own expense, demonstrate compliance with rule 335-3-6-.43 by the methods in subparagraph (c) of this paragraph. All tests shall be conducted by, or under the direction of, a person qualified by training and/or experience in the field of air pollution testing.

(b) A person proposing to conduct a VOC emissions test shall notify the Director of the intent to test not less than thirty (30) days before the proposed initiation of the tests so the Director may at his option observe the test. The

notification shall contain the information required by, and be in a format approved by, the Director.

(c) Test procedures to determine compliance with rule 335-3-6-.43 shall be consistent with one of the following methods and procedures:

1. EPA Guideline Series document, "Measurement of Volatile Organic Compounds", EPA-450/2-78-041;

2. Method 24 A; or

3. 40 CFR 60.433, "Performance Test and Compliance Provisions", except compliance shall be determined on a daily time period.

4. For add-on control equipment, the VOC mass emission rate shall be determined using the test procedures found in 40 CFR 60 (except that references to Administrator are changed to Director) and a method consistent with one of the following test methods:

(i) Reference Method 25.

(ii) Reference Method 25A.

(iii) Reference Method 25B.

(d) The Director may accept, instead of ink solvent analysis, a certification by the ink manufacturer of the composition of the ink solvent, if supported by actual batch formulation records. Also, the manufacturer's certification shall be consistent with EPA document 450/3-84-0l9, titled "Procedures for Certifying Quantity of VOC Emitted by Paint, Ink, and Other Coatings". Sufficient data to determine as-applied formulation must be provided if the as-applied formulation is different from the as-purchased ink.

(7) Test Methods and Procedures for Surface Coating of Miscellaneous Metal Parts and Products.

(a) The owner or operator of a VOC source required to comply with rule 335-3-6-.32(11) shall, at his own expense, demonstrate compliance by the methods of subparagraph (c) of this paragraph. All tests shall be conducted by, or under the direction of, a person qualified by training and/or experience in the field of air pollution testing.

(b) A person proposing to conduct a VOC emissions test shall notify the Director of the intent to test not less than thirty (30) days before the proposed initiation of the tests so the Director may at his option observe the test. The notification shall contain the information required by, and be in a format approved by, the Director.

(c) Test procedures to determine compliance with rule 335-3-6-.32(11) shall be consistent with one of the following methods and procedures:

1. EPA Guideline Series document, "Measurement of Volatile Organic Compounds", EPA-450/2-78-041;

2. Reference Method 24; or

3. Reference Method 24A.

4. For add-on control equipment, the VOC mass emission rate shall be determined using the test procedures found in 40 CFR 60 (except that references to Administrator are changed to Director) and a method consistent with one of the following test methods:

(i) Reference Method 25.

(ii) Reference Method 25A.

(iii) Reference Method 25B.

(d) The Director may accept, instead of the coating analysis required in subparagraph (c)2. of this paragraph, a certification by the manufacturer of the composition of the coatings, if supported by actual batch formulation records. Also, the manufacturer's certification shall be consistent with EPA document 450/3-84-0l9, titled "Procedures for Certifying Quantity of VOC Emitted by Paint, Ink, and Other Coatings". Sufficient data to determine as-applied formulation must be provided if the as-applied formulation is different from the as-purchased coating.

(8) Test Methods and Procedures for Petroleum Liquid Storage in Floating Roof Tanks.

(a) The owner or operator of any VOC source required to comply with rule 335-3-6-.44 shall, at his own expense, demonstrate compliance by the methods of this paragraph. All tests shall be conducted by, or under the direction of, a person qualified by training and/or experience in the field of air pollution testing.

(b) A person proposing to conduct a VOC emissions test shall notify the Director of the intent to test not less than thirty (30) days before the proposed initiation of the tests so the Director may at his option observe the test. The notification shall contain the information required by, and be in a format approved by, the Director.

(c) Compliance with rule 335-3-6-.44 shall be determined by the methods and procedures in EPA Guideline Series document (EPA-450/2-78-047) "Control of Volatile Organic Emissions from Petroleum Liquid Storage in External Floating Roof Tanks".

(9) Reserved.

(10) Test Methods and Procedures for the Manufacture of Synthesized Pharmaceutical Products.

(a) The owner or operator of any VOC source required to comply with rule 335-3-6-.39 shall, at his own expense, demonstrate compliance by the methods of subparagraph (c) of this paragraph or an alternative method approved by the Director. All tests shall be conducted, or under the direction of, a person qualified by training and/or experience in the field of air pollution testing.

(b) A person proposing to conduct a VOC emissions test shall notify the Director of the intent to test not less than thirty (30) days before the proposed initiation of the tests so the Director may, at his option, observe the test. The notification shall contain the information required by, and in a format approved by, the Director.

(c) Test procedures to determine compliance with rule 335-3-6-.39 shall be consistent with EPA Guideline Series document, "Measurement of Volatile Organic Compounds", (EPA-450/2-78-041) and "Control of Volatile Organic Emissions from Manufacture of Synthesized Pharmaceutical Products" (EPA-450/2-78-029).

(d) If add-on control equipment is used, continuous monitors of the following parameters shall be installed, periodically calibrated, and operated at all times that the associated control equipment is operating:

1. exhaust gas temperature of all incinerators;

2. temperature rise across a catalytic incinerator bed;

3. breakthrough of VOC on a carbon adsorption unit; and

4. any other continuous monitoring or recording device required by the Director.

(11) Test Methods and Procedures for the Surface Coating of Flatwood Paneling.

(a) The owner or operator of a VOC source required to comply with rule 335-3-6-.32(10) shall, at his own expense, demonstrate compliance by the methods of subparagraph (c) of this paragraph. All tests shall be conducted, or under the direction of, a person qualified by training and/or experience in the field of air pollution testing.

(b) A person proposing to conduct a VOC emissions test shall notify the Director of the intent to test not less than thirty (30) days before the proposed initiation of the tests so the Director may, at his option, observe the test. The notification shall contain the information required by, and be in a format approved by, the Director.

(c) Test procedures to determine compliance with rule 335-3-6-.32(10) shall be consistent with one of the following methods and procedures:

1. EPA Guideline Series document, "Measurement of Volatile Organic Compounds", EPA-450/2-78-041 and "Control of Volatile Organic Emissions from Existing Stationary Sources, Vol. VII: Factory Surface Coating of Flat Wood Paneling", EPA-450/2-78-032;

2. Reference Method 24;

3. Reference Method 24A; or

4. For add-on control equipment, the VOC mass emission rate shall be determined using the test procedures found in 40 CFR 60 (except that references to Administrator are changed to Director) and a method consistent with one of the following test methods:

(i) Reference Method 25.

(ii) Reference Method 25A.

(iii) Reference Method 25B.

(iv) Reference Method 18.

(d) The Director may accept, instead of the coating analysis required by subparagraph)(c)2. of this paragraph, a certification by the coating manufacturer of the composition of the coating, if supported by actual batch formulation records. Also, the manufacturer's certification shall be consistent with EPA document 450/3-84-0l9, titled "Procedures for Certifying Quantity of VOC Emitted by Paint, Ink, and Other Coatings". Sufficient data to determine as-applied formulation must be provided if the as-applied formulation is different from the as-purchased coating.

(12) Test Methods and Procedures for Leaks from Gasoline Tank Trucks and Vapor Collection Systems.

(a) The owner or operator of a VOC source shall, at his own expense, demonstrate compliance with rule 335-3-6-.41 by the methods of subparagraph (c) of this paragraph or an alternative method approved by the Director. All tests shall be made by, or under the direction of, a person qualified by training and/or experience in the field of air pollution testing.

(b) The owner or operator of a gasoline tank truck subject to chapter 6 shall notify the Director in writing of the date and location of a certification test at least ten (10) days before the anticipated test date. In order to observe a certification test, the Director may postpone or reschedule the certification test date by written notice to the owner or operator within five (5) days after receipt of certification test notification.

(c) Test methods and procedures shall be consistent with one of the following methods and procedures:

1. Reference Method 27.

2. EPA Guideline Series document, "Control of Volatile Organic Compound Leaks from Gasoline Tank Trucks and Vapor Collection Systems", EPA-450/2-78-051.

(13) Capture Efficiency Test Procedures for Volatile Organic Compound Emissions Capture and Control Systems.

(a) For the purposes of this rule, the following definitions and abbreviations apply:

1. "Capture" means the containment or recovery of emissions from a process for direction into a duct which may be exhausted through a stack or sent to a control device.

2. "Capture System" means all equipment (including, but not limited to, hoods, ducts, fans, booths, ovens, dryers, etc.) that contains, collects, and transports an air pollutant to a control device.

3. "Capture Efficiency" means the weight per unit time of VOC entering a capture system and delivered to a control device divided by the weight per unit time of total VOC generated by a source of VOC, expressed as a percentage.

4. "Control Device" means equipment (such as an incinerator or carbon adsorber) used to reduce, by destruction or removal, the amount of air pollutant(s) in an air stream prior to discharge to the ambient air.

5. "Control System" means a combination of one or more capture system(s) and control devices working in concert to reduce discharges of pollutants to the ambient air.

6. "Destruction or Removal Efficiency" means the efficiency, expressed as a decimal fraction, of a control device in destroying or removing contaminants calculated as one minus the amount of VOC exiting the control device divided by the amount of VOC entering the control device, e.g., [1 - (10 ppm/100 ppm)] = 0.9.

7. "Gas/Gas Method" means either of two methods for determining capture which rely only on gas phase measurements. One method requires construction of a temporary total enclosure (TTE) to assure all would be fugitive emissions are measured while the other uses the room or building which houses the emission source as an enclosure.

8. "Hood" means a device used to ventilate process equipment by capturing emissions of heat or air contaminants, e.g. organic vapors or other

fumes, which are then conveyed through exhaust system ductwork to a more convenient discharge point or to air pollution control equipment.

9. "Liquid/Gas Method" means either of two methods for determining capture which require both gas phase and liquid phase measurements and analysis. One liquid/gas method requires construction of a temporary total enclosure, the other uses the building or room which houses the facility as a permanent total enclosure.

10. "Overall Emission Reduction Efficiency" means the weight per unit time of VOC removed by a control device divided by the weight per unit time of VOC emitted by an emission source, expressed as a percentage. The overall emission reduction efficiency is the product of the capture efficiency and the control equipment destruction or removal efficiency.

11. "Method 204D" is the EPA-approved test procedure to determine the fugitive volatile organic compound (VOC) emissions from temporary total enclosures (TTE). It is intended to be used as a segment in the development of liquid/gas or gas/gas protocols for determining VOC capture efficiency (CE) for surface coating and printing operations. Refer to Appendix F for Method 204D.

12. "Method 204E" is the EPA-approved test procedure to determine the fugitive volatile organic compound (VOC) emissions from a building enclosure (BE). It is intended to be used as a segment in the development of liquid/gas or gas/gas protocols for determining VOC capture efficiency (CE) for surface coating and printing operations. Refer to Appendix F for Method 204E.

13. "Method 204B" is the EPA-approved test procedure to determine the volatile organic compounds (VOC) content of captured gas streams. It is intended to be used as a segment in the development of liquid/gas or gas/gas protocols for determining VOC capture efficiency (CE) for surface coating and printing operations. The procedure may not be acceptable in certain site-specific situations, e.g., when (1) direct fired heaters or other circumstances affect the quantity of VOC at the control device inlet; and (2) particulate organic aerosols are formed in the process and are present in the captured emissions. Refer to Appendix F for Method 204B.

14. "Method 204C" is the EPA-approved test procedure to determine the volatile organic compounds (VOC) content of captured gas streams. It is intended to be used as a segment in the development of gas/gas protocol in which fugitive VOC emissions are measured for determining VOC capture efficiency (CE) for surface coating and printing operations. A dilution system is used to reduce the VOC concentration of the captured emissions to about the same concentration as the fugitive emissions. The procedure may not be acceptable in certain site-specific situations, e.g., when (1) direct fired heaters or other circumstances affect the quantity of VOC at the control device inlet; and (2) particulate organic aerosols are formed in the process and are present in the captured emissions. Refer to Appendix F for Method 204C.

15. "Method 204A and 204F" are the EPA-approved test procedures to determine the input of volatile organic compounds (VOC) to a VOC emitting process. They are intended to be used as a segment in the development of liquid/gas protocols for determining VOC capture efficiency (CE) for surface coating and printing operations. Refer to Appendix F for Methods 204A and 204F.

16. "Method 204" is the EPA-approved procedure to determine whether a permanent or temporary enclosure meets the criteria of a total enclosure. Refer to Appendix F for Method 204.

17. "F" shall be an abbreviation for the mass of VOC leaving the process as gaseous fugitive emissions.

18. "G" shall be an abbreviation for the mass of VOC captured and delivered to a control device.

19. "L" shall be an abbreviation for the mass of VOC input to the process in liquid form.

20. "PTE" shall be an abbreviation for a permanent total enclosure, which contains a process that emits VOC and meets the specifications in Method 204.

21. "TTE" shall be an abbreviation for a temporary total enclosure which is built around a process that emits VOC and meets the specifications given in Method 204.

22. "BE" shall be an abbreviation for a building or room enclosure that contains a process that emits VOC. If a BE is to serve as a PTE or TTE, the appropriate requirements given in Method 204 shall be met.

(b) Applicability.

1. The requirements of subparagraph (3)(c) of this rule shall apply to all regulated VOC emitting processes employing a control system except as provided below.

2. If a source installs a PTE that meets EPA specifications, and which directs all VOC to a control device, the capture efficiency is assumed to be 100 percent, and the source is exempted from the requirements described in subparagraph (3)(c) of this rule. The EPA specifications to determine whether a structure is considered a PTE are given in Method 204. This does not exempt a source from performance of any control device efficiency testing required under these or any other regulations. In addition, a source shall demonstrate that all criteria for a PTE are met during the testing for control efficiency.

3. If a source uses a control device designed to collect and recover VOC (e.g. carbon adsorber), an explicit measurement of capture efficiency is not necessary if the conditions given below are met. The overall control of the

system can be determined by directly comparing the input liquid (L) to the recovered liquid VOC. The general procedure for use in this situation is given in 40 CFR 60.433 with the following additional restrictions:

(i) The source shall be able to equate solvent usage with solvent recovery on a 24-hour (daily) basis, rather than a 30-day weighted average as given in 40 CFR 60.433. This shall be done within 72 hours following each 24-hour period. In addition, one of the following two criteria shall be met:

(ii) The solvent recovery system (i.e., capture and control system) shall be dedicated to a single process line (e.g., one process line venting to a carbon adsorber system), or

(iii) If the solvent recovery system controls multiple process lines, the source shall be able to demonstrate that the overall control (i.e., the total recovered solvent VOC divided by the sum of liquid VOC input to all process lines venting to the control system) meets or exceeds the most stringent standard applicable for any process line venting to the control system.

(c) Specific requirements.

1. The capture efficiency of a process line shall be measured using one of the four protocols given in subparagraph (c)3. of this paragraph.

2. Any error margin associated with a test protocol may not be incorporated into the results of a capture efficiency test.

3. The four specific capture efficiency protocols are discussed in subparagraphs (c)3.(i) through (c)3.(iv) of this paragraph below. Any affected source shall use one of these protocols to measure capture efficiency, unless a suitable alternative protocol is approved by EPA as a SIP revision.

(i) Gas/Gas Method using TTE. The EPA specifications to determine whether a temporary enclosure is considered a TTE are given in Method 204. The capture efficiency equation to be used for this Protocol is:

$$CE = \frac{G_w}{(G_w + F_w)}$$

where:

CE = capture efficiency, decimal fraction

G_w = mass of VOC captured and delivered to the control device using a TTE. Method 204C is used to obtain G_w.

F_w = mass of fugitive VOC that escapes from a TTE. Method 204D is used to obtain Fw.

(ii) Liquid/Gas Method using TTE. The EPA specifications to determine whether a temporary enclosure is considered a TTE are given in Method 204. The capture efficiency equation to be used for this Protocol is:

$$CE = \frac{(L - F)}{L}$$

where:

CE = capture efficiency, decimal fraction.

L = mass of liquid VOC input to the process. Methods 204A or F are used to obtain L.

F = mass of fugitive VOC that escapes from a TTE. Method 204D is used to obtain F.

(iii) Gas/Gas Method using the building or room (BE) in which the affected source is located as the enclosure and in which G and F are measured while operating only the affected facility. All fans and blowers in the building or room shall be operated as they would under normal production. The capture efficiency equation to be used for this Protocol is:

$$CE = \frac{G}{(G + F_b)}$$

where:

CE = capture efficiency, decimal fraction.

G = mass of VOC captured and delivered to a control device. Method 204C is used to obtain G.

F_b = mass of fugitive VOC that escapes from the building enclosure. Method 204E is used to obtain F_b.

(iv) Liquid/Gas Method using the building or room (BE) in which the affected source is located as the enclosure and in which L and F are measured while operating only the affected facility. All fans and blowers in the building or room shall be operated as they would under normal production. The capture efficiency equation to be used for this protocol is:

$$CE = \frac{(L - F_b)}{L}$$

where:

CE = capture efficiency, decimal fraction.

L = mass of liquid VOC input to the process. Methods 204A or 204F are used to obtain L.

F_b = mass of fugitive VOC that escapes from building enclosure. Method 204E is used to obtain F_b.

(d) Recordkeeping and Reporting.

1. The owner or operator of all affected facilities shall maintain a copy of the capture efficiency protocol submitted to the Director on file. All results of appropriate test methods and CE procedures shall be reported to the Director within thirty (30) days of the test date. These records shall be retained by the owner or operator for a minimum of three (3) years after the test date.

2. Prior to making any changes to the capture or control equipment of an affected source, the owner or operator of the source shall notify the Director in writing of these changes in accordance with the permitting requirements under rule 335-3-14-.01.

3. The owner or operator of an affected source shall notify the Director thirty (30) days prior to performing any capture efficiency test and/or control efficiency tests.

(4) An affected source utilizing a PTE shall demonstrate that this enclosure meets the requirement given in Method 204 for a PTE during any testing of a control system.

(5) An affected source utilizing a TTE shall demonstrate that its TTE meets the requirements given in Method 204 for a TTE during the test of their control system. The source shall also provide documentation that the quality assurance criteria for a TTE have been achieved.

Author:
Statutory Authority: Code of Alabama 1975, §§22-28-14, 22-22A-5, 22-22A-6, and 22-22A-8.
History: Effective Date: June 9, 1987.
Amended: September 21, 1989; July 31, 1991; October 24, 1991; November 21, 1996.

335-3-6-.38 Reserved.

335-3-6-.39 Manufacture of Synthesized Pharmaceutical Products.

(1) For the purpose of this rule, the following definitions apply:

(a) "Condenser" means a device which cools a gas stream to a temperature which removes specific organic compounds by condensation.

(b) "Control System" means any number of control devices, including condensers, which are designed and operated to reduce the quantity of VOCs emitted to the atmosphere.

(c) "Reactor" means a vat or vessel, which may be jacketed to permit temperature control, designed to contain chemical reactions.

(d) "Separation Operation" means a process that separates a mixture of compounds and solvents into two or more components. Specific mechanisms include extraction, centrifugation, filtration, and crystallization.

(e) "Synthesized Pharmaceutical Manufacturing" means manufacture of pharmaceutical products by chemical synthesis.

(f) "Production Equipment Exhaust System" means a device for collecting and directing out of the work area VOC fugitive emissions from reactor openings, centrifuge fugitive emissions from reactor openings, centrifuge openings, and other vessel openings for the purpose of protecting workers from excessive VOC exposure.

(2) This rule shall apply to all synthesized pharmaceutical manufacturing facilities.

(3) This rule shall apply to all sources of VOCs, including reactors, distillation units, dryers, storage of VOCs, transfer of VOCs, extraction equipment, filters, crystallizers and centrifuges that have the potential to emit 6.8 kilograms per day (15 pounds per day) or more.

(4) The owner or operator of a synthesized pharmaceutical manufacturing facility subject to this rule shall control the VOC emissions from all reactors, distillation operations, crystallizers, centrifuges and vacuum dryers that have the potential to emit 6.80 kilograms per day (15 pounds per day) or more of VOCs. Surface condensers or equivalent controls shall be used, provided that:

(a) If surface condensers are used, the condenser outlet gas temperature must not exceed:

1. -25 °C (-13 °F) when condensing a VOC of a vapor pressure greater than 40.0 kPa (5.8 psia)*

2. -15 °C (5 °F) when condensing a VOC of a vapor pressure greater than 20.0 kPa (2.9 psia)*;

3. 0 °C (32 °F) when condensing a VOC of a vapor pressure greater than 10.0 kPa (1.5 psia)*;

* Vapor pressures as measured at 20 °C (68 °F)

4. 10 °C (50 °F) when condensing a VOC of a vapor pressure greater than 7.0 kPa (1.0 psia)*; or

5. 25 °C (77 °F) when condensing a VOC of a vapor pressure greater than 3.50 kPa (0.5 psia)*.

(b) If equivalent controls are used, the VOC emissions shall be reduced by at least as much as they would be by using a surface condenser which meets the requirements of subparagraph (a) of this paragraph.

(5) The owner or operator of a synthesized pharmaceutical manufacturing facility subject to this rule shall reduce the VOC emissions from all air dryers and production equipment exhaust systems:

(a) by at least ninety percent (90%) if emissions are 150 kilograms per day (330 pounds per day) or more of VOC; or

(b) to 15.0 kilograms per day (33 pounds per day) or less if emissions are less than 150 kilograms per day (330 pounds per day) of VOC.

(6) The owner or operator of a synthesized pharmaceutical manufacturing facility subject to this rule shall:

(a) provide a vapor balance system or equivalent control that is at least ninety percent (90%) effective in reducing emissions from truck or railcar deliveries to storage tanks with capacities greater than 7,571 liters (2,000 gallons) that store VOC with vapor pressures greater than 28.0 kPa (4.1 psia) at 20 °C (68 °F); and

(b) install pressure/vacuum conservation vents set at + 0.2 kPa on all storage tanks that store VOC with vapor pressures greater than 10.0 kPa (1.5 psia) at 20 °C (68 °F), unless a more effective control system is used.

(7) The owner or operator of a synthesized pharmaceutical facility subject to this rule shall enclose all centrifuges, rotary vacuum filters, and other filters which process liquids containing VOC with vapor pressures of 3.50 kPa (0.5 psia) or more at 20 °C (68 °F).

(8) The owner or operator of a synthesized pharmaceutical facility subject to this rule shall install covers on all in-process tanks containing a VOC at any time. These covers must remain closed, unless production, sampling, maintenance, or inspection procedures require operator access.

(9) The owner or operator of a synthesized pharmaceutical manufacturing facility subject to this rule shall repair all leaks from which a liquid, containing VOC, can be observed running or dripping. The repair shall be completed the first time the equipment is off-line for a period of time long enough to complete the repair.

Author:
Statutory Authority: Code of Alabama 1975, §§22-28-14, 22-22A-5, 22-22A-6, and 22-22A-8.
History: Effective Date: June 9, 1987.
Amended: July 31, 1991; November 21, 1996.

335-3-6-.40 Reserved.

335-3-6-.41 Leaks From Gasoline Tank Trucks and Vapor Collection Systems.

(1) For the purpose of this rule, the following definitions apply:

(a) "Air Sticker" means a sticker to be affixed to a gasoline tank truck, representing issuance of an Air Permit and that the gasoline tank truck has been demonstrated during its most recent annual vapor leak testing to the leakfree.

(b) "Bottom Filling" means the filling of a gasoline tank truck or stationary storage tank through an opening that is flush with the tank bottom.

(c) "Gasoline" means a petroleum distillate having a Reid vapor pressure of 27.6 kPa (4 psia) or greater that is used as fuel for internal combustion engines.

(d) "Gasoline Tank Truck" means tank trucks or trailers equipped with a storage tank and used for the transport of gasoline from sources of supply to stationary storage tanks of gasoline dispensing facilities, bulk gasoline plants or bulk gasoline terminals.

(e) "Gasoline Dispensing Facility" means any site where gasoline is dispensed to motor vehicle gasoline tanks from stationary storage tanks.

(f) "Bulk Gasoline Terminal" means a gasoline storage facility which receives gasoline from refineries primarily by pipeline, ship, or barge, and delivers gasoline to bulk gasoline plants or to commercial or retail accounts primarily by tank truck; and has a daily throughput of more than 75,708 liters (20,000 gallons) of gasoline.

(g) "Bulk Gasoline Plant" means a gasoline storage and distribution facility with an average daily throughput of 75,708 liters (20,000 gallons) or less which receives gasoline from bulk terminals by trailer transport, stores it in tanks, and subsequently dispenses the gasoline via account trucks to local farms, businesses, and gasoline dispensing facilities.

(h) "Vapor Collection System" means in a vapor transport system which uses direct displacement by the gasoline being transferred to force vapors from

the vessel being loaded into either a vessel being unloaded or a vapor control system or vapor holding tank.

(i) "Vapor Control System" means a system that prevents release to the atmosphere of at least ninety percent (90%) by weight of organic compounds in the vapors displaced from a vessel during transfer of gasoline.

(2) This rule shall be applicable to all vapor collection and control systems at bulk plants, bulk terminals, and gasoline dispensing facilities required by rules 335-3-6-.28, 335-3-6-.29, and 335-3-6-.30, and to all vapor collection systems on gasoline tank trucks.

(3) No person shall allow a gasoline tank truck subject to this rule to be filled or emptied unless the gasoline tank truck has:

(a) a vapor collection system that meets the test requirements of subparagraph (4)(a) of this rule; and

(b) a valid Jefferson County Department of Health Air Sticker attached and visibly displayed.

(4) Air Permits for Gasoline Tank Trucks.

(a) The owner or operator of a vapor collection system subject to this rule shall not load or cause to be loaded the said gasoline tank truck without a valid Air Sticker for the gasoline tank truck. An Air Permit and Air Sticker shall be issued by the Jefferson County Department of Health for the gasoline tank truck upon application by the owner or operator documenting that the gasoline tank truck has been leak checked by the test method referenced in rule 335-3-6-.37(12)(c) and has during the test sustained a pressure change of no more than 0.750 kPa (3 inches of H_2O) within five (5) consecutive minutes when pressurized to a gauge pressure of 4.50 kPa (18 inches of H_2O) and, when evacuated to a gauge pressure of 1.50 kPa (6 inches of H_2O) during the testing.

(b) The Air Sticker shall be renewed annually upon successful demonstration by the owner or operator that the gasoline tank truck has been leak checked and passed the requirements of subparagraph (a) of this paragraph.

(c) The owner or operator shall display the Air Sticker in accordance with instructions provided by the Jefferson County Department of Health Air Pollution Control Program.

(5) The owner or operator of a vapor collection system at a bulk plant, bulk terminal, gasoline dispensing facility or gasoline tank truck subject to this rule shall:

(a) design and operate the vapor collection system and the gasoline loading equipment in a manner that prevents:

1. gauge pressure from exceeding 4.50 kPa (18 inches of H_2O) and vacuum from exceeding 1.50 kPa (6 inches of H_2O) in the gasoline tank truck;

2. a reading equal to or greater than one hundred percent (100%) of the lower explosive limit (LEL, measured as propane) at 2.5 centimeters from all points on the perimeter of a potential leak source when measured by the method referenced in rule 335-3-6-.37(12) during loading or unloading operations at gasoline dispensing facilities, bulk plants and bulk terminals; and

3. avoidable visible liquid leaks during loading or unloading operations at gasoline dispensing facilities, bulk plants and bulk terminals;

(b) and within fifteen (15) days, repair and retest a vapor collection or control system that exceeds the limit in subparagraph (a)2. of this paragraph.

(6) The Director may, at any time, monitor a gasoline tank truck, vapor collection system or vapor control system to confirm continuing compliance with paragraphs (3), (4), and (5) of this rule. Monitoring to confirm the continuing existence of leak-tight conditions shall be consistent with the procedures described in Appendix B of the OAQPS Guideline Series document, "Control of Organic Compound Leaks from Gasoline Tank Trucks and Vapor Collection Systems", EPA-450/2-78-05l.

(7) Each vapor-laden gasoline tank truck shall be:

(a) designed and maintained to be vapor-tight during loading, unloading operations, and transport with the exception of normal pressure/vacuum venting as required by DOT regulations; and

(b) if refilled in Jefferson County, filled only at:

1. bulk gasoline plants complying with rule 335-3-6-.28; or

2. bulk gasoline terminals complying with rule 335-3-6-.29.

Author:
Statutory Authority: Code of Alabama 1975, §§22-28-14, 22-22A-5, 22-22A-6, and 22-22A-8.
History: Effective Date: June 9, 1987.
Amended: July 31, 1991; November 21, 1996.

335-3-6-.42 Reserved.

335-3-6-.43 Graphic Arts.

(1) For the purpose of this rule, the following definitions apply:

(a) "Packaging Rotogravure Printing" means printing upon paper, paper board, metal foil, plastic film, and other substrates, which are, in subsequent operations, formed into containers and labels for articles to be sold.

(b) "Publication Rotogravure Printing" means printing upon paper which is subsequently formed into books, magazines, catalogues, brochures, directories, newspaper supplements, and other types of printed materials.

(c) "Flexographic Printing" means the application of words, designs and pictures to a substrate by means of a roll printing technique in which both the pattern to be applied is raised above the printing roll and the image carrier is made of rubber or other elastometric materials. The two roller inking system consists of an ink trough, a rubber covered fountain roller, and a screened (Anilox) inking roller with cells of uniform size and depth. The fountain roller transfers the ink from the trough to the anilox roller cells. The anilox roller may be engraved or etched metal or ceramic. The cells of the anilox roller transfer the inks to the surface of the flexographic plate.

(d) "Roll Printing" means the application of words, designs and pictures to a substrate usually by means of a series hard rubber or steel rolls each with only partial coverage.

(e) "Rotogravure Printing" means the application of words, designs and pictures to a substrate by means of a roll printing technique which involves an intaglio or recessed image areas in the form of cells.

(f) "Letterpress printing" means the application of words, designs, or pictures to a substrate by means of a raised ink surface in the mirror image of the printed material or "wrong-reading". The ink is transferred to the substrate directly from the raised surface. Inking rollers transfer the ink from the ink trough directly to the image carrier. Letterpress inks, which typically have the consistency of paste, are viscous and tacky.

(2) This rule shall apply to packaging rotogravure, printing rotogravure, and flexographic printing facilities.

(3) No owner or operator of a packaging rotogravure, printing rotogravure or flexographic printing facility subject to this rule and employing solvent containing ink shall operate, cause, allow or permit the operation of the facility unless:

(a) the volatile fraction of ink, as it is applied to the substrate, contains twenty-five percent (25%) by volume or less of organic solvent and seventy-five percent (75%) by volume or more of water; or

(b) the facility prints with ink which contains sixty percent (60%) by volume or more nonvolatile material; or

(c) the owner or operator installs and operates:

1. a carbon adsorption system which reduces the volatile organic emissions from the capture system by at least ninety percent (90%) by weight; or

2. an incineration system which oxidizes at least ninety percent (90%) of the VOCs (VOC measured as total combustible carbon) to carbon dioxide and water; or

3. an alternative VOC emission reduction system demonstrated to have at least a ninety percent (90%) reduction efficiency, measured across the control system, that has been approved by the Director.

(4) A capture system shall be used in conjunction with the emission control systems in subparagraph (3)(c) of this rule. The design and operation of a capture system must be consistent with good engineering practice, and shall be required to provide for an overall reduction in VOC emissions of at least:

(a) seventy-five percent (75%) where a publication rotogravure process is employed;

(b) sixty-five percent (65%) where a packaging rotogravure process is employed; or

(c) sixty percent (60%) where a flexographic printing process is employed.

(5) If add-on control equipment is used, continuous monitors of the following parameters shall be installed, periodically calibrated, and operated at all times that the associated control equipment is operating:

(a) exhaust gas temperature of all incinerators;

(b) temperature rise across a catalytic incinerator bed;

(c) breakthrough of VOC on a carbon adsorption unit; and

(d) any other continuous monitoring or recording device required by the Director.

(6) The owner or operator of all Graphic Arts sources subject to the requirements in this rule shall maintain as a minimum the following records to demonstrate compliance in the time frame required by any regulation under this rule or Air Permit condition:

(a) The quantity in gallons of all inks delivered to the application system; and,

(b) The quantity in gallons of all organic liquid dilutents (ink thinners and additives) added to the surface coatings; and,

(c) The quantity in gallons of all organic liquid solvents used for wash (blanket) or cleanup; and,

(d) The quantity in gallons of all organic liquid waste properly contained and shipped out for proper disposal and a certification of the waste density and percent VOC content by weight; and,

(e) The following information on all inks and organic liquid solvents (dilutents, wash, and cleanup):

1. Manufacturer; and,

2. Product name and manufacturer's code number; and,

3. Density (pounds per gallon); and,

4. VOC content in percent weight and volume; and,

5. Solids content in percent weight and volume; and,

6. Water content in percent weight and volume; and,

7. Exempt VOC content in percent weight and volume.

(f) The permanent records required under this paragraph shall be retained by the owner or operator at the location of the regulated source for a minimum of two years after the date of record and shall be available to representatives of the Director upon request.

(g) The recordkeeping provisions of this paragraph shall not apply if the Director determines that alternative records would be sufficient to provide assurance that the source is operating in compliance on a twenty-four (24) hour basis and these alternative requirements are incorporated as permit conditions for the source. In no case can recordkeeping requirements be waived or the stringency of the emissions limit be relaxed.

Author:
Statutory Authority: Code of Alabama 1975, §§22-28-14, 22-22A-5, 22-22A-6, and 22-22A-8.
History: Effective Date: June 9, 1987.
Amended: July 31, 1991; November 21, 1996.

335-3-6-.44 Petroleum Liquid Storage In External Floating Roof Tanks.

(1) For the purpose of this rule, the following definitions apply:

(a) "Condensate" means hydrocarbon liquid separated from natural gas which condenses due to changes in the temperature and/or pressure and remains liquid at standard conditions.

(b) "Crude Oil" means a naturally occurring mixture which consists of hydrocarbons and sulfur, nitrogen and/or oxygen derivatives of hydrocarbons which is a liquid in the reservoir at standard conditions.

(c) "Custody Transfer" means the transfer of produced crude oil and/or condensate, after processing and/or treating in the producing operations, from storage tanks or automatic transfer facilities to pipelines or any other forms of transportation.

(d) "External Floating Roof" means a storage vessel cover in an open top tank consisting of a double deck or pontoon single deck which rests upon and is supported by the petroleum liquid being contained and is equipped with a closure seal or seals to close the space between the roof edge and tank wall.

(e) "Liquid-mounted Seal" means a primary seal mounted in continuous contact with the liquid between the tank wall and the floating roof around the circumference of the tank.

(f) "Petroleum Liquids" mean crude oil, condensate, and any finished or intermediate products manufactured or extracted in a petroleum refinery.

(g) "Vapor-mounted Seal" means any primary seal mounted continuously around the circumference of the tank. The annular vapor space is bounded by the bottom of the primary seal, the tank wall, the liquid surface, and the floating roof.

(h) "Waxy, Heavy Pour Crude Oil" means a crude oil with a pour point of 10 °C (50 °F) or higher as determined by the American Society for Testing Materials Standard D 97-66, "Test for Pour Point of Petroleum Oils".

(2) This rule shall apply to all petroleum liquid storage vessels equipped with external floating roofs, having capacities greater than 151,146 liters (40,000 gallons).

(3) This rule shall not apply to petroleum liquid storage vessels which:

(a) are used to store waxy, heavy pour crude oil;

(b) have capacities less than 1,601,224 liters (423,000 gallons) and are used to store produced crude oil and condensate prior to custody transfer;

(c) contain a petroleum liquid with a true vapor pressure of less than 10.5 kPa (1.5 psia);

(d) contain a petroleum liquid with a true vapor pressure less than 27.6 kPa (4.0 psia); and

1. are of welded construction and

2. presently possess a metallic-type shoe seal, a liquid-mounted foam seal, a liquid-mounted liquid filled type seal, or other closure device of demonstrated equivalence approved by the Director; or

(e) are of welded construction, equipped with a metallic-type shoe primary seal and has a secondary seal from the top of the shoe seal to the tank wall (shoe-mounted secondary seal).

(4) No owner or operator of a petroleum liquid storage vessel subject to this rule shall store a petroleum liquid in that vessel unless:

(a) the vessel has been fitted with:

1. a continuous secondary seal extending from the floating roof to the tank wall (rim-mounted secondary seal); or

2. a closure or other device which controls VOC emissions with an effectiveness equal to or greater than a seal required under subparagraph (a)1. of this paragraph as approved by the Director.

3. for vapor mounted seals, the area of accumulated gaps between the secondary seal and the tank wall are determined by the method in rule 335-3-6-.37(8)(c), and shall not exceed 21.1 square centimeters per meter of the tank diameter (1.0 square inch per foot of tank diameter).

(b) all seal closure devices meet the following requirements:

1. there are no visible holes, tears, or other openings in the seal(s) or seal fabric;

2. the seal(s) are intact and uniformly in place around the circumference of the floating roof between the floating roof and tank wall; and

3. for vapor-mounted seals, the area of accumulated gaps between the secondary seal and the tank wall are determined by the method in rule 335-3-6-.37(8)(c), and shall not exceed 21.2 square centimeters per meter of tank diameter (1.0 square inch per foot of tank diameter).

(c) all openings in the external floating roof, except for automatic bleeder vents, rim space vents, and leg sleeves, are:

1. equipped with covers, seals, or lids in the closed position except when the openings are in actual use; and

2. equipped with projections into the tank which remain below the liquid surface.

(d) automatic bleeder vents are closed at all times except when the roof is floated off or landed on the roof leg supports;

(e) rim vents are set to open when the roof is being floated off the leg supports or at the manufacturer's recommended setting; and

(f) emergency roof drains are provided with slotted membrane fabric covers or equivalent covers which cover at least ninety percent (90%) of the area of the opening.

(5) The owner or operator of a petroleum liquid storage vessel with an external floating roof subject to this rule shall:

(a) perform routine inspections semi-annually in order to ensure compliance with paragraph (4) of this rule, and the inspections shall include a visual inspection of the secondary seal gap;

(b) measure the secondary seal gap annually in accordance with rule 335-3-6-.37(8) when the floating roof is equipped with a vapor-mounted primary seal; and

(c) maintain records of the throughput quantities, maximum true vapor pressure at storage conditions, and types of volatile petroleum liquids stored. Permanent records shall also be maintained of the results of the inspections performed in subparagraphs (a) and (b) of this paragraph.

(6) The owner or operator of a petroleum liquid storage vessel with an external floating roof not subject to this rule, but containing a petroleum liquid with a true vapor pressure greater than 7.0 kPa (1.0 psia), shall maintain records of the average monthly storage temperature, the type of liquid, throughput quantities, and the maximum true vapor pressure for all petroleum liquids with a true vapor pressure greater than 7.0 kPa.

(7) The owner or operator of a petroleum liquid storage vessel subject to this rule shall submit to the Director, as a minimum, an annual report detailing the results of routine monthly inspections, secondary seal gap measurements, and the amounts and physical properties of stored liquids.

(8) Copies of all records and reports under paragraphs (5), (6), and (7) of this rule shall be retained by the owner or operator for a minimum of two (2) years after the date on which the record was made.

Author:
Statutory Authority: Code of Alabama 1975, §§22-28-14, 22-22A-5, 22-22A-6, and 22-22A-8.
History: Effective Date: June 9, 1987.
Amended: September 21, 1989; July 31, 1991; November 21, 1996.

335-3-6-.45 Large Petroleum Dry Cleaners.

(1) Except as otherwise required by the context, terms used in this rule are defined in rule 335-3-1-.02 or in this paragraph, as follows:

(a) "Cartridge Filter" means perforated canisters containing filtration paper and/or activated carbon that are used in a pressurized system to remove solid particles and fugitive dyes from soil-laden solvent.

(b) "Containers and Conveyors of Solvent" means piping, ductwork, pumps, storage tanks, and other ancillary equipment that are associated with the installation and operation of washers, dryers, filters, stills, and settling tanks.

(c) "Dry Cleaning" means a process for the cleaning of textiles and fabric products in which articles are washed in a nonaqueous solution (solvent) and then dried by exposure to a heated air stream.

(d) "Perceptible Leaks" means any petroleum solvent vapor or liquid leaks that are conspicuous from visual observation; such as pools or droplets of liquid, or buckets or barrels of solvent or solvent-laden waste standing open to the atmosphere.

(e) "Petroleum Solvent" means organic material produced by petroleum distillation comprising a hydrocarbon range of 8 to 12 carbon atoms per organic molecule that exists as a liquid under standard conditions.

(f) "Solvent Recovery Dryer" means a class of dry cleaning dryers that employs a condenser to liquify and recover solvent vapors evaporated in a closed-loop, recirculating stream of heated air.

(2) Applicability.

This rule shall apply to petroleum solvent washers, dryers, solvent filters, settling tanks, vacuum stills, and other containers and conveyors of petroleum solvent that are used in petroleum solvent dry cleaning facilities that consume 123,026 liters (32,500 gallons) or more of petroleum solvent annually.

(3) Standards.

(a) Each owner or operator of a petroleum solvent dry cleaning dryer shall either:

1. limit VOC emissions to the atmosphere to 3.5 kilograms (7.7 lbs) of volatile organic compounds per 100 kilograms (220 lbs) dry weight of articles dry cleaned; or

2. install and operate a solvent recovery dryer in a manner such that the dryer remains closed and the recovery phase continues until a final recovered solvent flow rate of 50 milliliters (1.7 oz) per minute is attained.

(b) Each owner or operator of a petroleum solvent filtration system shall either:

1. reduce the volatile organic compound content in all filtration wastes to 1.0 kilogram (2.2 lbs) or less per 100 kilograms (220 lbs) dry weight of articles dry cleaned, before disposal, and exposure to the atmosphere, or

2. install and operate a cartridge filtration system, and drain the filter cartridges in their sealed housings for 8 hours or more before their removal.

(c) Each owner or operator shall repair all petroleum solvent vapor and liquid leaks within 3 working days after identifying the sources of the leaks. If necessary repair parts are not on hand, the owner or operator shall order these parts within 3 working days, and repair the leaks no later than 3 working days following the arrival of the necessary parts.

(4) Testing and Monitoring.

(a) To be in compliance with subparagraph (3)(a)1. of this rule, the owner or operator shall:

1. calculate, record, and report to the Director the weight of volatile organic compounds vented from the dryer emission control device calculated by using EPA Reference Methods 1, 2, and 25A of 40 CFR 60 with the following specifications:

(i) field calibration of the flame ionization analyzer with propane standards;

(ii) laboratory determination of the ratio of the flame ionization analyzer response to a given parts per million by volume concentration of propane to the response to the same parts per million concentration of the volatile organic compounds to be measured; and

(iii) determination of the weight of volatile organic compounds vented to the atmosphere by:

(I) the multiplication of the ratio determined in subparagraph (a)1.(ii) of this paragraph by the measured concentration of volatile organic compound gas (as propane) as indicated by the flame ionization analyzer response output record;

(II) the conversion of the parts per million by volume value calculated in subparagraph (a)1.(iii)(I) of this paragraph into a mass concentration value for the volatile organic compounds present; and

(III) multiply the mass concentration value calculated in subparagraph (a)1.(iii)(II) of this paragraph by the exhaust flow rate determined by using EPA Reference Test Methods 1 and 2;

2. calculate, record, and report to the Director the dry weight of articles dry cleaned; and

3. repeat subparagraphs (a)1. and 2. above for normal operating conditions that encompass at least 30 dryer loads, which total not less than 1,800 kg dry weight, and represent a normal range of variations in fabrics, solvents, load weights, temperatures, flow rates, and process deviations.

(b) To determine compliance with subparagraph (3)(a)2. of this rule, the owner or operator shall verify that the flow rate of recovered solvent from the solvent recovery dryer at the termination of the recovery phase is no greater than 50 milliliters (1.7 oz) per minute. This one-time procedure shall be conducted for a duration of no less than two weeks during which no less than 50 percent of the dryer loads shall be monitored for their final recovered solvent flow rate. The suggested point for measuring the flow rate of recovered solvent is from the solvent-water separator. Near the end of the recovery cycle, the flow of recovered solvent should be diverted to a graduated cylinder. The cycle should continue until the minimum flow of solvent is 50 milliliters (1.7 oz) per minute. The type of articles cleaned and the total length of the cycle should then be recorded.

(c) To be in compliance with subparagraph (3)(b)1. of this rule the owner or operator shall:

1. calculate, record, and report to the Director the weight of volatile organic compounds contained in each of at least five 1.0 kilogram (2.2 lbs) samples of filtration waste material taken at intervals of at least 1 week by employing ASTM Method D322-80 (Standard Test Method for Gasoline Diluent in Used Gasoline Engine Oils by Distillation);

2. calculate, record, and report to the Director the total dry weight of articles dry cleaned during the intervals between removal of filtration waste samples, as well as the total mass of filtration waste produced in the same period; and

3. calculate, record, and report to the Director the weight of volatile organic compounds contained in filtration waste material per 100 kilograms (220 lbs) dry weight of articles dry cleaned.

(d) Compliance with subparagraph (3)(c) of this rule requires that each owner or operator make weekly inspections of washers, dryers, solvent filters, settling tanks, vacuum stills, and all containers and conveyors of petroleum solvent to identify perceptible volatile organic compound vapor or liquid leaks.

Author:
Statutory Authority: Code of Alabama 1975, §§22-28-14, 22-22A-5, 22-22A-6, and 22-22A-8.
History: Effective Date: June 9, 1987.
Amended: July 31, 1991; November 21, 1996.

335-3-6-.46 Reserved.

335-3-6-.47 Leaks From Coke By-product Recovery Plant Equipment.

(1) Except as otherwise required by the context, terms used in this rule are defined in rule 335-3-1-.02 or in this paragraph as follows:

(a) "Closed Vent System" means a system that is not open to the atmosphere and that is composed of piping, connections, and, if necessary, flow indicating devices that transport gas or vapor from a piece or pieces of equipment to a control device.

(b) "Coke By-product Recovery Plant" means any facility engaged in the separation and recovery of various fractions from coke oven gas, including tar, pitch, ammonium sulfate, naphthalene, and light oil.

(c) "Connector" means flanged, screwed, welded, or other joined fittings used to connect two pipe lines or a pipe line and a piece of process equipment.

(d) "Conservation Vent" means a pressure-vacuum valve installed on a naphthalene separation unit cover that prevents the release of vapors during small changes in temperatures, barometric pressure, or liquid level.

(e) "Control Device" means an enclosed combustion device, vapor recovery system or flare.

(f) "Equipment" means each pump, valve, pressure relief valve, sampling connection, open-ended valve, and flange or connector in VOC service.

(g) "First Attempt at Repair" means taking rapid action for the purpose of stopping or reducing leakage of organic material to atmosphere using best practices.

(h) "In Gas Service" means that the piece of equipment contains process fluid that is in the gaseous state at operating conditions.

(i) "In Light Liquid Service" means that the piece of equipment contains or contacts a process fluid that is a liquid at operating conditions, one or more components having a vapor pressure greater than 0.3 kPa at 20 °C (0.04 psia at 68 °F), and the total concentration of the pure components, having a vapor pressure greater than 0.3 kPa at 20 °C, is equal to or greater than 20 percent by weight.

(j) "In Vacuum Service" means that equipment is operating at an internal pressure which is at least 5 kPa (0.73 psia) below ambient pressure.

(k) "In VOC Service" means that the piece of equipment contains or contacts VOC.

(l) "Naphthalene Separation Unit" means the settling tank and associated equipment used in the recovery of naphthalene from the final cooler aqueous effluent.

(m) "Open-Ended Valve" means any valve, except pressure relief devices, having one side of the valve in contact with process fluid and one side open to the atmosphere, either directly or through open piping.

(n) "Pressure Release" means the emission of materials resulting from system pressure being greater than set pressure of the pressure relief device.

(o) "Quarter" means the following three-month periods: January through March, April through June, July through September, and October through December.

(p) "Reference Method 21" means Reference Method 21 of Appendix A of 40 CFR 60.

(q) "Repaired" means that equipment is adjusted, or otherwise altered, in order to eliminate a leak as indicated by one of the following: an instrument reading of 10,000 ppm or greater, indication of liquids dripping, or indication by a sensor that a seal or barrier fluid system has failed.

(2) The provisions of this rule shall apply to all equipment in VOC service in a Coke By-Product Recovery Plant.

(3) General Requirements.

(a) Owners or operators of coke by-product recovery plants shall demonstrate compliance with the requirements of paragraphs (4) through (7) of this rule. Compliance will be determined by review of records and reports, and inspection using the methods and procedures specified in Reference Method 21.

(b) Equipment that is in vacuum service shall be controlled by means of a closed vent system, or determined to achieve emission limitation at least equivalent to the requirements of paragraphs (4) through (7) of this rule.

(c) Each component subject to the requirements of this paragraph shall be marked with weatherproof tags that will be readily obvious to both plant personnel and the Director, and have an identification number.

(d) Any component in VOC service that appears to be leaking on the basis of sight, smell, or sound, shall be repaired with an initial attempt as soon as possible and final repair within 15 calendar days.

(4) Pumps in Light Liquid Service.

(a) Each pump in light liquid service shall be monitored each calendar quarter to detect leaks by the methods specified in Reference Method 21.

(b) Each pump in light liquid shall be checked by visual inspection each calendar week for indications of liquids dripping from the pump seal.

(c) If an instrument reading of 10,000 ppm or greater is measured, or if there are indications of liquids dripping from the pump seal, a leak is detected.

(d) When a leak is detected, it shall be repaired as soon as practicable, but no later than 15 calendar days after it is detected, except as provided in paragraph (8) of this rule.

(5) Valves in Gas and Light Liquid Service.

(a) Each valve in gas and light liquid service shall be monitored each calendar quarter to detect leaks by the methods specified in Reference Method 21, except as provided in subparagraph (d) of this paragraph.

(b) If an instrument reading of 10,000 ppm or greater is measured, a leak is detected.

(c) When a leak is detected, it shall be repaired as soon as practicable, but no later than 15 calendar days after the leak is detected.

(d) Valves in gas and light liquid service may be exempted from this paragraph provided:

1. An owner or operator demonstrates that a valve cannot be monitored without elevating the monitoring personnel more than 2 meters above a support surface.

2. A valve has no external actuating mechanism in contact with the process fluid.

(6) Pressure Relief Valves in Gas Service.

(a) Each pressure relief valve in gas service shall be monitored each calendar quarter to detect leaks by methods specified in Reference Method 21.

(b) If an instrument reading of 10,000 ppm or greater is measured, a leak is detected.

(c) When a leak is detected, excluding overpressure releases, it shall be repaired as soon as practicable, but not later than 15 calendar days after it is detected.

(7) Open Ended Valves.

(a) Each open-ended valve shall be equipped with a cap, blind flange, plug, or a second valve, except during operations requiring fluid flow through the open-ended valve.

(b) Each open-ended valve equipped with a second valve shall be operated in a manner such that the valve on the process fluid end is closed before the second valve is closed.

(c) Open-ended valves which serve as a sampling connection shall be equipped with a closed purge system or closed vent system such that:

1. purged process fluid be returned to the process line with zero VOC emissions to atmosphere, or

2. collect and recycle the purged process fluid with zero VOC emissions to atmosphere.

(8) Delay of Repair.

(a) Delay of repair of equipment for which leaks have been detected will be allowed if repair is technically infeasible without process unit shutdown. Repair of this equipment shall occur before the end of the next process unit shutdown.

(b) Delay of repair of equipment will be allowed for equipment which is isolated from the process and which does not remain in VOC service.

(c) Delay of repair for valves will be allowed if the owner or operator demonstrates that emissions of purged material resulting from immediate repair are greater than the fugitive emissions likely to result from delay of repair, and when repair procedures are effected, the purged material is collected and destroyed or recovered in a control device or collected and recycled with zero emissions to atmosphere.

(9) Naphthalene Separation Unit Emissions.

(a) Each owner or operator of any open settling tank used in the separation of naphthalene from final cooler aqueous effluent shall enclose and seal the tank to contain VOC emissions. The cover may include the following items of equipment:

1. a vent equipped with a water leg seal or a conservation vent; and

2. an access hatch which is equipped with a gasket.

(b) The cover may be removed when required by process operations, but must be replaced at the completion of operations.

(10) Recordkeeping Requirements.

(a) Owners or operators of coke by-product recovery plants shall maintain monitoring records for all components subject to the requirements of this rule. This log shall contain at a minimum the following data:

1. the type of component;

2. the location of the component;

3. the identification number of the component;

4. the date on which a leaking component is discovered, initial repair attempted, and the component is repaired;

5. the date and instrument reading of the recheck monitoring after a leaking component is repaired;

6. a record of the calibration of the monitoring instrument; and

7. the identification of components awaiting repair according to paragraph (8) of this rule.

(b) Copies of the monitoring log shall be retained by the owner or operator for a minimum of 2 years after the date on which the record was made or the report prepared.

(c) Copies of the monitoring log shall immediately be made available to the Director or his representative upon verbal or written request, at any reasonable time.

(11) Reporting Requirements.

Owners or operators of coke by-product recovery plants shall submit reports for each calendar quarter to the Director listing the following data:

(a) the total number of components inspected;

(b) the total number of components found leaking; and

(c) the total number of components awaiting repair per delay of repair provisions of paragraph (8) of this rule.

(12) The Director, upon written notice, may modify the monitoring, recordkeeping and reporting requirements.

Author:
Statutory Authority: Code of Alabama 1975, §§22-28-14, 22-22A-5, 22-22A-6, and 22-22A-8.
History: Effective Date: June 9, 1987.
Amended: July 31, 1991; November 21, 1996.

335-3-6-.48 Emissions From Coke By-product Recovery Plant Coke Oven Gas Bleeder.

(1) For the purpose of this rule, all terms not defined herein shall have the meaning given them in rule 335-3-6-.47(1) or in rule 335-3-1-.02, and for the following term the specific definition given shall apply:

(a) "Coke Oven Gas Bleeder" means that piece of equipment which vents surplus coke oven gas (gas not consumed in the process or supplied to other sources) directly to the atmosphere.

(2) Owners or operators of coke by-product recovery plants shall equip each coke oven gas bleeder with a closed vent system capable of capturing and transporting excess gas to a control device. All coke oven gas from the closed vent system shall be passed through the said control device which removes at least 95 percent of the VOC from such gas before it is discharged to the atmosphere.

(3) Owners or operators of control devices used to comply with this rule shall monitor these control devices to ensure that they are operated and maintained in conformance with their design specifications.

(4) Closed vent systems shall be monitored to determine compliance with no detectable emissions, as indicated by an instrument reading of less than 500 ppm above background, and, by visual inspections, quarterly and at other times requested by the Director.

(5) Control devices used to comply with the provisions of this rule shall be operated at all times when emissions may be vented to them from the closed vent systems.

Author:
Statutory Authority: Code of Alabama 1975, §§22-28-14, 22-22A-5, 22-22A-6, and 22-22A-8.
History: Effective Date: June 9, 1987.
Amended: November 21, 1996.

335-3-6-.49 Manufacture of Laminated Countertops.

(1) Except as otherwise required by the context, terms used in this rule are defined in rule 335-3-1-.02 or in this paragraph as follows:

(a) "Adhesive" means any substance that is capable of bonding surface together by attachment.

(b) "Adhesive Application System" means all operations and equipment which applies, conveys, and dries an adhesive, including, but not limited to, spray booths, flow coaters, flash off areas, air dryers, and ovens.

(c) "Elastomeric Adhesive" means any adhesive containing natural or synthetic rubber.

(d) "Flash-off Area" means the space between the application area and the oven.

(e) "Lamination of Countertops" means the bonding of a decorative material such as vinyl, plastic, or linoleum, to particle board, composition board, plywood, or other similar materials to manufacture a cabinet or countertop using an adhesive.

(2) This rule shall apply to all facilities which have the potential to emit more than 90.7 Mg (100 tons) per year of VOCs from the manufacture of counter and cabinet tops by bonding decorative laminates to wood, particle board, composition board, or similar materials.

(3) No owner or operator of a facility manufacturing laminated countertops subject to this rule may cause, allow, or permit the discharge into the atmosphere in excess of 0.06 kilogram of VOC per liter (0.5 lb/gal) of adhesive, excluding water, as delivered to the adhesive application system.

(4) Compliance with the emission limit under this rule shall be demonstrated by one or more of the following methods:

(a) For low solvent adhesive technology, the VOC mass emission rate shall be demonstrated via certification by the adhesive manufacturer as to the composition of the adhesive, if supported by actual batch formulation records. Sufficient data to determine as-applied formulation must be provided if the as-applied formulation is different from the as-purchased adhesive.

(b) For add-on control equipment, the VOC mass emission rate shall be determined using the test procedures found in 40 CFR 60 (except that references to Administrator are changed to Director) and a method consistent with one of the following test methods:

1. Reference Method 25.

2. Reference Method 25A.

3. Reference Method 25B.

4. Reference Method 18.

(5) Recordkeeping.

(a) The owner or operator of a laminated countertop manufacturing line subject to the requirements in this rule shall maintain as a minimum the following daily records to demonstrate compliance in the time frame required by subparagraph (b) of this paragraph below or Air Permit condition:

1. the quantity in gallons of all adhesives delivered to the application system; and

2. the quantity in gallons of all organic liquid diluents (thinners and additives) added to the adhesives; and

3. the quantity in gallons of all organic liquid solvents used for wash or cleanup; and

4. the quantity in gallons of all organic liquid waste properly contained and shipped out for proper disposal and a certification of the waste density and percent VOC content by weight; and

5. the date of each application of adhesives, diluents and usage of wash and cleanup solvents; and

6. the regulation(s) applicable to the laminated countertop manufacturing line for which the records are being maintained; and

7. the daily records shall be kept in the units necessary to verify compliance (i.e., pounds of VOC per gallon of adhesive delivered to the application system, excluding water and exempt VOC); and

8. the application method and the substrate material type; and

9. where applicable, the continuous combustion temperature in degrees Fahrenheit of a thermal incinerator control system; and

10. where applicable, the temperature rise across the catalyst bed and exhaust temperature in degrees Fahrenheit of a catalytic incinerator control system; and

11. where applicable, the inlet and outlet temperature in degrees Fahrenheit of the cooling medium of a condenser control system; and

12. the following information on all adhesives and organic liquid solvents (diluents, additives, wash, and cleanup:

(i) manufacturer (supplier); and

(ii) product name and manufacturer's code number; and

(iii) density (pounds per gallon); and

(iv) VOC content in percent weight and volume; and

(v) solids content in percent weight and volume; and

(vi) water content in percent weight and volume; and

(vii) exempt VOC content in percent weight and volume; and

(viii) pounds of VOC per gallon of adhesive delivered to the application system, excluding water and exempt VOC.

(b) The compliance demonstration time frame for an individual laminated countertop manufacturing line shall be a twenty-four (24) hour period (calendar day).

(c) The daily records required under this chapter shall be retained by the owner or operator at the location of the regulated source for a minimum of two years after the date of record and shall be available to representatives of the Director upon request.

(d) The recordkeeping provisions of this chapter shall not apply if the Director determines that alternative records would be sufficient to provide assurance that the source is operating in compliance on a twenty-four (24) hour basis and these alternative requirements are incorporated as permit conditions for the source. In no case can recordkeeping requirements be waived or the stringency of the emissions limit be relaxed.

Author:
Statutory Authority: Code of Alabama 1975, §§22-28-14, 22-22A-5, 22-22A-6, and 22-22A-8.
History: Effective Date: June 9, 1987.
Amended: September 21, 1989; July 31, 1991; November 21, 1996.

335-3-6-.50 Paint Manufacture.

(1) Except as otherwise required by the context, terms used in this rule are defined in rule 335-3-1-.02 or in this paragraph, as follows:

(a) "Bottom Filling" means the filling of a tank in VOC service through an opening that is flush with the bottom of the tank.

(b) "Conservation Vents" means a pressure-vacuum valve installed on a fixed roof tank that prevents the release of vapors during small changes in temperatures, barometric pressure, or liquid level.

(c) "Enamel" means a glossy paint that forms a smooth hard coat after application and drying.

(d) "Equipment" means each pump, valve, pressure relief valve, sampling connection, open-ended valve, and flange or connector in VOC service.

(e) "In-VOC Service" means that the piece of equipment contains or contacts a fluid which is at least 10% VOC by weight.

(f) "Paint" means a liquid suspension of finely divided pigment particles in a liquid composed of a resin or binder and volatile solvent. Paint includes water- based, solvent-based oil and alkyd paints.

(g) "Repaired" means that equipment is adjusted or otherwise altered in order to eliminate indications of a leak.

(h) "Submerged Filling" means the filling of a tank through a pipe or hose whose discharge is under the surface level of the liquid in the tank being filled.

(i) "Varnish" means a homogeneous solution of natural or synthetic resins, dyes, and oils dispersed in organic solvents. The term varnish includes varnishes, resins, and lacquers.

(2) This rule shall apply to all facilities which have the potential to emit more than 90.7 Mg (100 tons) per year of VOCs from the manufacture or processing of paints, varnishes, lacquers, enamels, and other allied surface coating products.

(3) The owner or operator of a paint, varnish, lacquer, enamel, and other allied surface coatings manufacturing or processing facility subject to this rule shall meet the following equipment and operating requirements:

(a) The owner or operator shall equip tanks storing VOC with a vapor pressure greater than 10 kPa (1.5 psi) at 20 °C (68 °F), with pressure/vacuum Conservation Vents set at + 0.2 kPa (0.029 psi), except where more effective air pollution control is used. Stationary VOC storage containers with a capacity greater than 946 liters (250 gallons) shall be equipped with a submerged-fill pipe or bottom fill, except where more effective air pollution control is used.

(b) The owner or operator shall install covers on all open-top tanks used for the production of non-waterbase coating products. These covers shall remain closed except when production, sampling, maintenance or inspection procedures require operator access.

(c) The owner or operator shall install covers on all tanks containing VOC used for cleaning equipment. These covers shall remain closed except when operator access is required.

(d) The owner or operator shall operate and maintain all grinding mills according to the manufacturer's specifications. The manufacturer's specifications shall be kept on file at the facility and made available to the Director on request.

(e) The owner or operator shall check each pump by visual inspection each calendar week for indications of liquids dripping from the pump seal. If there are indications of liquids dripping from the pump seal, it shall be repaired as soon as practicable, but no later than 15 calendar days after it is detected.

(f) If any equipment in VOC service appears to be leaking on the basis of sight, smell, or sound, the following requirements shall apply:

1. a readily visible identification shall be attached to the leaking equipment. The identification may be removed upon repair.

2. the leaking equipment shall be repaired with an initial attempt as soon as practicable, but no later than 15 calendar days after it is detected.

3. when a leak is detected, the owners or operators shall record the date of detection and repair and the said record shall be retained at the facility in a readily accessible location for at least 2 years from the date of each detection or each repair attempt.

(4) All gases or vapors from varnish cooking (resin reactor) operations shall be collected and passed through a control device which removes at least 85 percent of the VOC from such gases or vapors before they are discharged to the atmosphere.

Author:
Statutory Authority: Code of Alabama 1975, §§22-28-14, 22-22A-5, 22-22A-6, and 22-22A-8.
History: Effective Date: June 9, 1987.
Amended: November 21, 1996.

335-3-6-.51 Reserved.

335-3-6-.52 Seasonal Afterburner Shutdown - VOC Control Only.

(1) This rule shall apply to natural gas-fired afterburners installed to control the emissions of volatile organic compounds (VOCs) for the purpose of reducing ambient ozone concentrations. It does not apply to flares, VOCs vented to boilers, afterburners operated principally for odor control, or afterburners operated to control toxic or hazardous substances.

(2) The months of applicability for the seasonal afterburner shutdown shall be December, January, and February.

(3) Seasonal shutdown of natural gas-fired afterburners shall be allowed in Jefferson County under the following conditions:

(a) The afterburner is for the control of VOC emissions only;

(b)) a petition to shutdown an afterburner is submitted in writing to the Director thirty (30) days prior to the shutdown date each season specifying the period(s) within the seasonal afterburner shutdown period when the shutdown shall be in effect for the afterburner;

(c) written approval is granted by the Director for each afterburner; and

(d) monthly records in a format approved by this Department, are maintained during the periods of afterburner shutdown of the quantity of VOC emissions from the source for which the afterburner is normally used as an air pollution control device.

Author:
Statutory Authority: Code of Alabama 1975, §§22-28-14, 22-22A-5, 22-22A-6, and 22-22A-8.
History: Effective Date: June 9, 1987.
Amended:

335-3-6-.53 List of EPA Approved and Equivalent Test Methods and Procedures for the Purpose of Determining VOC Emissions.

(1) Reference Method 1, "Sample and Velocity Traverses for Stationary Sources", 40 CFR 60, Appendix A.

(2) Reference Method 1A, "Sample and Velocity Traverses for Stationary Sources with Small Stacks or Ducts", 40 CFR 60, Appendix A.

(3) Reference Method 2, "Determination of Stack Gas Velocity and Volumetric Flow Rate (Type S Pitot Tube)", 40 CFR 60, Appendix A.

(4) Reference Method 2A, "Direct Measurement of Gas Volume Through Pipes and Small Ducts", 40 CFR 60, Appendix A.

(5) Reference Method 2B, "Determination of Exhaust Gas Volume Flow Rate from Gasoline Vapor Incinerators", 40 CFR 60, Appendix A.

(6) Reference Method 2C, "Determination of Stack Gas Velocity and Volumetric Flow Rate from Small Stacks or Ducts (Standard Pitot Tube)", 40 CFR 60, Appendix A.

(7) Reference Method 2D, "Measurement of Gas Volume Flow Rates in Small Pipes and Ducts", 40 CFR 60, Appendix A.

(8) Reference Method 3, "Gas Analysis for Carbon Dioxide, Oxygen, Excess Air, and Dry Molecular Weight", 40 CFR 60, Appendix A.

(9) Reference Method 3A, "Determination of Oxygen and Carbon Dioxide Concentrations in Emissions From Stationary Sources (Instrumental Analyzer Procedure)", 40 CFR 60, Appendix A.

(10) Reference Method 4, "Determination of Moisture Content in Stack Gases", 40 CFR 60, Appendix A.

(11) Reference Method 18, "Determination of Gaseous Organic Compounds by Gas Chromatography", 40 CFR 60, Appendix A.

(12) Reference Method 21, "Determination of Volatile Organic Compound Leaks", 40 CFR 60, Appendix A.

(13) Reference Method 23, "Determination of Polychlorinated Dibenzo-p-dioxins and Polychlorinated Dibenzofurans From Stationary Sources", 40 CFR 60, Appendix A.

(14) Reference Method 24, "Determination of Volatile Matter Content, Water Content, Density, Volume Solids, and Weight Solids of Surface Coatings", 40 CFR 60, Appendix A.

(15) Reference Method 24A, "Determination of Volatile Matter Content and Density of Printing Inks and Related Coatings", 40 CFR 60, Appendix A.

(16) Reference Method 25, "Determination of Total Gaseous Nonmethane Organic Emissions as Carbon", 40 CFR 60 Appendix A.

(17) Reference Method 25A, "Determination of Total Gaseous Organic Concentrations Using a Flame Ionization Analyzer", 40 CFR 60, Appendix A.

(18) Reference Method 25B, Determination of Total Gaseous Organic Concentration Using a Nondispersive Infrared Analyzer", 40 CFR 60, Appendix A.

(19) Reference Method 27, "Determination of Vapor Tightness of Gasoline Delivery Tank Using Pressure-Vacuum Test", 40 CFR 60, Appendix A.

Author:
Statutory Authority: Code of Alabama 1975, §§22-28-14, 22-22A-5, 22-22A-6, and 22-22A-8.
History: Effective Date:
Amended: September 21, 1989; July 31, 1991; November 21, 1996.

ALABAMA DEPARTMENT OF ENVIRONMENTAL MANAGEMENT
AIR DIVISION - AIR POLLUTION CONTROL PROGRAM

CHAPTER 335-3-7
CONTROL OF CARBON MONOXIDE EMISSIONS

TABLE OF CONTENTS

335-3-7-.01 Metals Production
335-3-7-.02 Petroleum Processes

335-3-7-.01 Metals Production. No person shall emit the carbon monoxide gases generated during the operation of a gray iron cupola, blast furnace, or basic oxygen steel furnace unless they are burned at 1300 °F for 0.3 seconds or greater in a direct flame afterburner or equivalent device equipped with an indicating pyrometer which is positioned in the working area at the operator's eye level.

Author: James W. Cooper and John E. Daniel.
Statutory Authority: Code of Alabama 1975, §§22-28-14, 22-22A-5, 22-22A-6, and 22-22A-8.
History: Effective Date: January 18, 1972.
Amended:

335-3-7-.02 Petroleum Processes. No person shall emit carbon monoxide waste gas stream from any catalyst regeneration of a petroleum cracking system, petroleum fluid coker, or other petroleum process into the atmosphere, unless the waste gas stream is burned at 1300 °F for 0.3 seconds or greater in a direct-flame afterburner or boiler equipped with an indicating pyrometer which is positioned in the working area at the operator's eye level.

Author: James W. Cooper and John E. Daniel.
Statutory Authority: Code of Alabama 1975, §§22-28-14, 22-22A-5, 22-22A-6, and 22-22A-8.
History: Effective Date: January 18, 1972.
Amended:

ALABAMA DEPARTMENT OF ENVIRONMENTAL MANAGEMENT
AIR DIVISION - AIR POLLUTION CONTROL PROGRAM

CHAPTER 335-3-8
CONTROL OF NITROGEN OXIDE EMMISSIONS

TABLE OF CONTENTS

335-3-8-.01 Standards for Portland Cement Kilns
335-3-8-.02 Nitric Acid Manufacturing
335-3-8-.03 NOx Emissions from Electric Utility Steam Generating Units
335-3-8-.04 Standards for Stationary Reciprocating Internal Combustion Engines
335-3-8-.05 New Combustion Sources
335-3-8-.06 Standards for New Combined-Cycle Electric Generating Units
335-3-8-.07 TR NOx Annual Trading Program-Purpose and Definitions
335-3-8-.08 TR NOx Annual Trading Program- Applicability
335-3-8-.09 TR NOx Annual Trading Program – Retired Unit Exemption
335-3-8-.10 TR NOx Annual Trading Program – Standard Requirements
335-3-8-.11 TR NOx Annual Trading Program – Computation of Time
335-3-8-.12 Administrative Appeal Procedures
335-3-8-.13 NOx Annual Trading Budgets and Variability Limits
335-3-8-.14 TR NOx Annual Allowance Allocations
335-3-8-.15 Reserved
335-3-8-.16 Authorization of Designated Representative and Alternate Designated Representative
335-3-8-.17 Responsibilities of Designated Representative and Alternate Designated Representative
335-3-8-.18 Changing Designated Representative and Alternate Designated Representative; Changes in Owners and Operators; Changes in Units at the Source
335-3-8-.19 Certificate of Representation
335-3-8-.20 Objections Concerning Designated Representative and Alternate Designated Representative
335-3-8-.21 Delegation by Designated Representative and Alternate Designated Representative
335-3-8-.22 Reserved
335-3-8-.23 Establishment of Compliance Accounts, Assurance Accounts, and General Accounts
335-3-8-.24 Recordation of TR NOx Annual Allowance Allocations and Auction Results
335-3-8-.25 Submission of TR NOx Annual Allowance Transfers
335-3-8-.26 Recordation of TR NOx Annual Allowance Transfers
335-3-8-.27 Compliance with TR NOx Annual Emissions Limitation
335-3-8-.28 Compliance with TR NOx Annual Assurance Provisions
335-3-8-.29 Banking
335-3-8-.30 Account Error
335-3-8-.31 Administrator's Action on Submissions

335-3-8-.32 Reserved
335-3-8-.33 General Monitoring, Recordkeeping, and Reporting Requirements
335-3-8-.34 Initial Monitoring System Certification and Recertification Procedures
335-3-8-.35 Monitoring System Out-of-Control Periods
335-3-8-.36 Notifications Concerning Monitoring
335-3-8-.37 Recordkeeping and Reporting
335-3-8-.38 Petitions for Alternatives to Monitoring, Recordkeeping, or Reporting Requirements
335-3-8-.39 TR NOx Ozone Season Group 2 Trading Program – Purpose and Definitions
335-3-8-.40 TR NOx Ozone Season Group 2 Trading Program – Applicability
335-3-8-.41 TR NOx Ozone Season Group 2 Trading Program – Retired Unit Exemption
335-3-8-.42 TR NOx Ozone Season Group 2 Trading Program – Standard Requirements
335-3-8-.43 TR NOx Ozone Season Group 2 Trading Program – Computation of Time
335-3-8-.44 Administrative Appeal Procedures
335-3-8-.45 NOx Ozone Season Trading Budgets and Variability Limits
335-3-8-.46 TR NOx Ozone Season Group 2 Allowance Allocations
335-3-8-.47 Reserved
335-3-8-.48 Authorization of Designated Representative and Alternate Designated Representative
335-3-8-.49 Responsibilities of Designated Representative and Alternate Designated Representative
335-3-8-.50 Changing Designated Representative and Alternate Designated Representative; Changes in Owners and Operators; Changes in Units at the Source
335-3-8-.51 Certificate of Representation
335-3-8-.52 Objections Concerning Designated Representative and Alternate Designated Representative
335-3-8-.53 Delegation by Designated Representative and Alternate Designated Representative
335-3-8-.54 Reserved
335-3-8-.55 Establishment of Compliance Accounts, Assurance Accounts, and General Accounts
335-3-8-.56 Recordation of TR NOx Ozone Season Group 2 Allowance Allocations and Auction Results
335-3-8-.57 Submission of TR NOx Ozone Season Group 2 Allowance Transfers
335-3-8-.58 Recordation of TR NOx Ozone Season Group 2 Allowance Transfers
335-3-8-.59 Compliance with TR NOx Ozone Season Group 2 Emissions Limitation
335-3-8-.60 Compliance with TR NOx Ozone Season Group 2 Assurance Provisions
335-3-8-.61 Banking
335-3-8-.62 TR NOx Ozone Season Group 2 Trading Program – Account Error
335-3-8-.63 TR NOx Ozone Season Group 2 Trading Program – Administrator's Action on Submissions
335-3-8-.64 Reserved

335-3-8-.65 General Monitoring, Recordkeeping, and Reporting Requirements
335-3-8-.66 Initial Monitoring System Certification and Recertification Procedures
335-3-8-.67 Monitoring System Out-of-Control Periods
335-3-8-.68 Notifications Concerning Monitoring
335-3-8-.69 Recordkeeping and Reporting
335-3-8-.70 Petitions for Alternatives to Monitoring, Recordkeeping, or Reporting Requirements
335-3-8-.71 NOx Budget Program
335-3-8-.72 NOx Budget Program Monitoring and Reporting

335-3-8-.01 Standards for Portland Cement Kilns.

(1) Applicability. The requirements of this rule apply only to Portland cement kilns in the Counties of Autauga, Bibb, Blount, Calhoun, Chambers, Cherokee, Chilton, Clay, Cleburne, Colbert, Coosa, Cullman, Dallas, DeKalb, Elmore, Etowah, Fayette, Franklin, Greene, Hale, Jackson, Jefferson, Lamar, Lauderdale, Lawrence, Lee, Limestone, Macon, Madison, Marion, Marshall, Morgan, Perry, Pickens, Randolph, Russell, Shelby, St. Clair, Sumter, Talladega, Tallapoosa, Tuscaloosa, Walker, and Winston with process rates of at least the following:

(a) Long dry kilns-12 short tons per hour (TPH) of clinker produced;

(b) Long wet kilns-10 short TPH of clinker produced;

(c) Preheater kilns-16 short TPH of clinker produced; and

(d) Precalciner and preheater/precalciner kilns-22 short TPH of clinker produced.

(2) Definitions. For the purpose of this rule, the following definitions apply:

(a) "Clinker" means the product of a Portland cement kiln from which finished cement is manufactured by milling and grinding.

(b) "Long Dry Kiln" means a kiln 14 feet or larger in diameter, 400 feet or greater in length, which employs no preheating of the feed. The inlet feed to the kiln is dry.

(c) "Long Wet Kiln" means a kiln 14 feet or larger in diameter, 400 feet or greater in length, which employs no preheating of the feed. The inlet feed to the kiln is a slurry.

(d) "Low-NOX Burners" means combustion equipment designed to reduce flame turbulence, delay fuel/air mixing, and establish fuel rich zones for initial combustion.

(e) "Mid-kiln System Firing" means secondary firing in kiln systems by injecting solid fuel at an intermediate point in the kiln system using a specially designed fuel injection mechanism for the purpose of decreasing nitrogen oxide (NOX) emissions through:

1. Burning part of the fuel at a lower temperature; and

2. Reducing conditions at the fuel injection point that may destroy some of the NOX formed upstream in the kiln burning zone.

(f) "Portland Cement" means a hydraulic cement produced by pulverizing clinker consisting essentially of hydraulic calcium silicates, usually containing one or more of the forms of calcium sulfate as an interground addition.

(g) "Portland Cement Kiln" means a system, including any solid, gaseous or liquid fuel combustion equipment, used to calcine and fuse raw materials, including limestone and clay, to produce Portland cement clinker.

(h) "Precalciner Kiln" means a kiln where the feed to the kiln system is preheated in cyclone chambers and utilize a second burner to calcine material in a separate vessel attached to the preheater prior to the final fusion in a kiln which forms clinker.

(i) "Preheater Kiln" means a kiln where the feed to the kiln system is preheated in cyclone chambers prior to the final fusion in a kiln which forms clinker.

(3) Standard Requirements. After May 31, 2004, the owner or operator of any Portland cement kiln subject to this rule shall not operate the kiln during May 1 through September 30 unless the kiln has installed and operates during May 1 to September 30 with at least one of the following: low-NOX burners, mid-kiln system firing, alternative control techniques or reasonably available control technology approved by the Director and the EPA as achieving at least the same emissions decreases as with low-NOX burners or mid-kiln system firing.

(4) The owner or operator subject to the requirements of paragraph (3) of this rule above shall comply with the requirements as follows:

(a) By May 31, 2004, submit to the Department the identification number and type of each Portland cement kiln subject to this rule, the name and address of the facility where the kiln is located, and the name and telephone number of the person responsible for demonstrating compliance with paragraph (3); and

(b) Submit data, electronically and in a format prescribed and provided by the Department, which reports the total NOX emissions from May 1 through September 30 of each year as follows:

1. Annual reporting. For each kiln, beginning with emission year 2004 and every year thereafter, by March 31st of the calendar year following the emission year being reported, the data specified in 40 CFR, §§ 51.122(c)(1) and (2) must be submitted to the Department.

2. Triennial reporting. For each kiln, beginning with emission year 2005 and every third year thereafter, by March 31st of the calendar year following the emission year being reported, the data specified in 40 CFR, § 51.122(c)(3) must be submitted to the Department.

3. Year 2003 reporting. For each kiln, by March 31, 2004, the data specified in 40 CFR, § 51.122(c)(3) must be submitted to the Department.

4. Year 2007 reporting. For each kiln, by March 31, 2008, the data specified in 40 CFR, § 51.122(c)(3) must be submitted to the Department.

(5) By May 31, 2004, the owner or operator of a kiln subject to this rule shall submit to the Department a demonstration of compliance with the requirements of paragraph (3). If compliance is being achieved by use of prescribed equipment, for example low-NOX burners or mid-kiln system firing, the demonstration of compliance shall be written certification to the Department that this equipment is installed and in use. If compliance is being achieved by use of alternative control techniques, approved by the Director and EPA, demonstration of compliance shall be specified by the Director and EPA. In case of compliance proposed to be achieved by use of alternative control techniques, a plan for compliance demonstration shall be submitted to the Department by May 1, 2003. Upon receipt, the Department shall immediately forward a copy of the plan to the EPA. By November 1, 2003, the Director shall specify in writing to the owner or operator of the kiln how compliance shall be demonstrated, this specification consistent with methods and requirements specified by the EPA following its review of the submitted plan.

(6) By December 31 of each year, beginning in 2004, the owner or operator of a Portland cement kiln subject to this rule shall submit to the Department a written certification that compliance with the requirements of paragraph (3) has been maintained during that year's five-month period May 1 though September 30. The methods of determining that this compliance has been maintained shall be as specified on the major source operating permit issued for the facility at which the kiln is operated.

(7) Beginning May 1, 2004, the owner or operator of a Portland cement kiln subject to this rule shall maintain records for May 1 through September 30 of each year that include the data as follow:

(a) The date, time, and duration of any startup, shutdown, or malfunction in the operation of the cement kiln or its emissions monitoring equipment or of any scheduled maintenance activity that affects NOx emissions or emissions monitoring;

(b) The results of any compliance testing; and

(c) Other data required by permit to be maintained.

(8) The records listed in paragraph (7) of this rule shall be retained on-site for a minimum of 2 years following the calendar year for which they are made and shall be made available to the Department for review upon request.

(9) The requirements of this rule shall not apply to periods of scheduled maintenance activities that affect NOX emissions.

Author: Ronald W. Gore.
Statutory Authority: Code of Alabama 1975, §§22-28-10, 22-28-11, 22-28-14, 22-28-18, 22-28-20, 22-22A-5, 22-22A-6, and 22-22A-8.
History: Effective Date: April 6, 2001.
Amended:

335-3-8-.02 Nitric Acid Manufacturing.

(1) Except as provided in paragraph (2) of this rule, no person shall cause or permit the emission of nitrogen oxides, calculated as nitrogen dioxide, from nitric acid manufacturing plants in excess of 5.5 pounds per ton of one hundred percent (100%) acid produced.

(2) For nitric acid manufacturing plants within a designed capacity greater than one hundred and fifty (150) tons per day of one hundred percent (100%) acid, no person shall cause or permit the emission of nitrogen oxides, calculated as nitrogen dioxide, from such manufacturing plants in excess of twenty (20) pounds per ton of one hundred percent (100%) acid produced.

Author: James W. Cooper and John E. Daniel.
Statutory Authority: Code of Alabama 1975, §§22-28-14, 22-22A-5, 22-22A-6, and 22-22A-8.
History: Effective Date: January 18, 1972.
Amended: November 21, 1996.

335-3-8-.03 NOx Emissions from Electric Utility Steam Generating Units.

(1) Applicability. This rule applies to existing coal-fired electric utility steam generating installations in Walker and Jefferson Counties.

(2) During the compliance period specified in paragraph (3) below, no person shall cause or permit the operation of a coal-fired electric utility steam generating installation in Walker or Jefferson Counties in such a manner that nitrogen oxides (NOX) are emitted in excess of the emission limits established by the Department in this rule and specified in the Major Source Operating Permit for the affected unit(s). The BTU-weighted 30-day rolling average NOX emission rate for the affected units shall be less than or equal to 0.21 pounds per million BTU of heat input, during the compliance period specified in paragraph (3) below.

(3) Beginning May 1, 2003, and each year thereafter, the compliance period shall begin May 1 and end on September 30 of each year. Compliance is based on a 30-day rolling average.

(a) The first calculated 30-day averaging period shall be May 1 through May 30.

(b) The last calculated 30-day averaging period shall be September 1 through September 30.

(4) Testing, Recordkeeping and Reporting.

(a) Continuous emissions monitoring systems (CEMS) to measure nitrogen oxide emissions from each affected unit shall be installed and operated at locations approved by the Director. The CEMS shall meet the specifications and procedures of 40 CFR Part 75 and will be certified and maintained in accordance with 40 CFR Part 75. In addition, each of the CEMS shall undergo a relative accuracy test audit (RATA) on an annual basis at times approved by the Director.

(b) Records of the 30-day average nitrogen oxide emission rate for the affected units shall be kept for a period of five (5) years.

(c) A written report of the 30-day average nitrogen oxide emission rates for the affected units shall be submitted to the Department by the 15th day of each month during the period from May 1 to September 30 of each year. The first report shall be submitted by June 15 and shall include data for the month of May. The final report shall be submitted by October 15 and shall include data for the month of September.

(d) Any exceedances of the NOX emission rate specified in paragraph (2) of this rule shall be reported to the Department within two (2) working days of the date of the exceedance.

(e) Additional testing, recordkeeping, and reporting requirements may be necessary and will be specified by the Department at such times as they become necessary.

Author: A. David Ousley, C. Lynn Garthright, and Jeffery W. Kitchens.
Statutory Authority: Code of Alabama 1975, §§22-28-14, 22-22A-5, 22-22A-6, and 22-22A-8.
History: Effective Date: December 1, 2000.
Amended:

335-3-8-.04 Standards for Stationary Reciprocating Internal Combustion Engines.

(1) Applicability. The requirements of this rule apply to any person that owns or operates a facility at which one or more large affected engines were located during the baseline period.

(2) Definitions. For the purpose of this rule, the following definitions apply:

(a) "Affected engine" means an engine that was operated within the fine grid during the baseline period and was included in the NOX SIP Call Inventory.

(b) "Control period" means the period beginning May 1 of a year and ending on September 30 of the same year, inclusive, beginning in 2007.

(c) "Fine grid portion of the State" or "fine grid" means the geographic area that includes the Counties of Autauga, Bibb, Blount, Calhoun, Chambers, Cherokee, Chilton, Clay, Cleburne, Colbert, Coosa, Cullman, Dallas, DeKalb, Elmore, Etowah, Fayette, Franklin, Greene, Hale, Jackson, Jefferson, Lamar, Lauderdale, Lawrence, Lee, Limestone, Macon, Madison, Marion, Marshall, Morgan, Perry, Pickens, Randolph, Russell, St. Clair, Shelby, Sumter, Talladega, Tallapoosa, Tuscaloosa, Walker, and Winston, located within the State of Alabama.

(d) "Large affected engine" means any affected engine whose average daily NOX emission rate was greater than one ton per day during the baseline period.

(e) "NOX potential to emit" means the maximum capacity of an engine to emit NOX under its physical and operational design or applicable permit condition for a given period of time. Any physical limitation on the capacity of a source's potential to emit an air pollutant, including air pollution control equipment or combustion modification, shall be treated as part of its design if the limitation is enforceable by the Director.

(f) "NOX SIP Call baseline period" or "baseline period" means the period beginning May 1, 1995, and ending on September 30, 1995, inclusive.

(g) "NOX SIP Call baseline period utilization" or "baseline utilization" means the amount of work performed by an affected engine during the baseline period in brake horsepower-hours (bhp-hr).

(h) "NOX SIP Call Inventory" means the NOX emission inventory published March 2, 2000 at 65 FR 11222 and amended April 21, 2004 at 69 FR 21603.

(i) "Projected 2007 Ozone Season Base NOX Emissions" or "projected 2007 emissions" means, for an affected engine, the projected uncontrolled NOX emissions (in tons) for the 2007 ozone season as published in the NOX SIP Call Inventory and denoted as the variable labeled 'SNOX07'. For an affected engine that is not a large affected engine to which a control device is added or a combustion modification is made after September 30, 1995, if the Director approves a demonstration made by the person subject to this rule that the Projected 2007 Ozone Season Base NOX Emissions published in the NOX SIP Call Inventory for that affected engine was not calculated from the correct 1995 ozone season emissions, the Projected 2007 Ozone Season Base NOX Emissions for that affected engine will be the product of its uncontrolled 1995 NOX hourly emission rate (lb/hr), the number of hours it operated during the 1995 ozone season, and the 1995-2007 growth factor assigned to that affected engine in the

NOX SIP Call Inventory denoted as the variable labeled 'GF9507.' The demonstration should provide representative emission test data or manufacturer's emission data for the affected engine applicable during the 1995 ozone season and records documenting its hours of operation during the 1995 ozone season.

(j) "Projected 2007 Ozone Season utilization" or "projected utilization" means the baseline utilization of an affected engine multiplied by the 1995-2007 growth factor assigned to that affected engine in the NOX SIP Call Inventory denoted as the variable labeled 'GF9507.'

(k) "Ozone season" means the period beginning May 1 of a year and ending on September 30 of the same year, inclusive.

(l) "Stationary reciprocating internal combustion engine" or "engine" means any reciprocating internal combustion engine which uses reciprocating motion to convert heat energy into mechanical work and which is not self- propelled or intended to be propelled while performing its function.

(3) NOX Emission Standards.

(a) Any person subject to this rule shall reduce NOX emissions from one or more affected engines within the fine grid during each control period by an amount not less than 82% of the 2007 Ozone Season Base NOX Emissions (rounded to the nearest whole ton) of the large affected engines currently or formerly located at a facility that is under their control or ownership.

(b) For the purposes of the compliance plan required by paragraph (4), NOX emission reductions shall be calculated according to the following criteria:

1 For an affected engine to which a control device is added or a combustion modification is made after September 30, 1995, the NOX emission reductions shall be equal to the difference (in tons) in the affected engine's projected 2007 emissions and the affected engine's NOX potential to emit at the controlled emission rate during a control period.

2 For an affected engine that is removed from service after September 30, 1995, and the facility's operating capacity equivalent to the removed affected engine's projected utilization is replaced, in part or in total, during a control period by a NOX emitting device installed after September 30, 1995, the NOX emission reductions shall be the difference (in tons) in the removed affected engine's projected 2007 emissions and the replacement device's NOX potential to emit during a control period for the operating capacity (in brake horsepower-hours) equivalent to the portion of the removed affected engine's projected utilization that it will replace, not to exceed 100%.

3 For an affected engine that is removed from service after September 30, 1995, and the facility's operating capacity (in brake horsepower-hours) equivalent to the removed affected engine's projected utilization is replaced, in part or in total, during a control period by a device that does not emit NOX

installed after September 30, 1995, the NOX emission reductions shall be the removed affected engine's projected 2007 emissions except where a NOX emitting device is installed at the removed affected engine's facility after the date that the device that does not emit NOX was installed.

4 For an affected engine that is removed from service after September 30, 1995, and the facility's operating capacity (in brake horsepower-hours) equivalent to the removed affected engine's projected utilization is replaced, in part or in total, during a control period by a device that does not emit NOX and a NOX emitting device is installed at the removed affected engine's facility after the date that the device that does not emit NOX was installed, the NOX emission reductions shall be the difference (in tons) in the removed affected engine's projected 2007 emissions and the NOX emitting device's NOX potential to emit during a control period for its operating capacity (in brake horsepower-hours) equivalent to the removed affected engine's projected utilization it will replace, not to exceed 100%.

(c) The following shall not be considered NOX emission reductions for the purposes of complying with this rule:

1 A restriction on an affected engine's hours of operation during a control period, including a prohibition from operating;

2 A NOX emission limitation enforceable by the Director placed upon an affected engine to which no control device was added or combustion modification was made after September 30, 1995; or

3 The removal of an affected engine from service if that affected engine is placed into service at another location within the fine grid.

4 NOX emission reductions achieved at a facility that is not owned or operated by the person who is responsible for demonstrating compliance with this rule.

(d) Demonstrability and Enforceability of NOX Emission Reductions.

(i) NOX emission reductions calculated in accordance with subparagraph (3)(b)1., (3)(b)2., or (3)(b)4. shall be demonstrable and enforceable if:

(ii) An hourly NOX emission limitation (in pounds per hour, "lb/hr") is incorporated into a permit enforceable by the Director for the affected engine or replacement device that is to be operated during a control period (the hourly NOX emission limitation shall be equal to the hourly emission rate used to calculate the NOX potential to emit for the affected engine or replacement device in the source's compliance plan), and

(iii) A performance test conducted in accordance with paragraph (5) determines that the affected engine or replacement device is capable of complying with the hourly NOX emission limitation.

2 For any affected engine removed from service, NOX emission reductions calculated in accordance with subparagraphs (3)(b)2. through (3)(b)4. shall be demonstrable and enforceable if the applicable permit has been modified or voided, whichever is applicable, such that the affected engine's authorization to operate ceases on or before the first day of the control period for which NOX emission reductions would be credited for its removal.

(e) NOX emission reductions achieved to comply with this rule shall not be considered creditable for compliance with any other applicable requirement and shall not be considered a contemporaneous emission decrease for the purposes of netting or offsets under ADEM Admin. Code r. 335-3-14-.04 or .05.

(4) Compliance Plan.

(a) Any person subject to this rule shall submit a complete compliance plan to the Director no later than May 1, 2006.

(b) Contents. The compliance plan shall contain the following:

1 Name and address of person subject to this rule, including the name and telephone number of the person responsible for demonstrating compliance with the submitted compliance plan.

2 Identification of the large affected engines for which the person is subject to this rule to include:

(i) Facility name and location;

(ii) Engine manufacturer, model, and maximum design capacity (brake horsepower);

(iii) NOX SIP Call Inventory source identification number ('POINTID'); and

(iv) 2007 Ozone Season Base NOX Emissions.

3 Calculation of the NOX emission reductions required by subparagraph (3)(a).

4 Identification of the affected engines from which NOX emission reductions will be achieved to include:

(i) Facility name and location;

(ii) Engine manufacturer, model, and maximum design capacity (brake horsepower);

(iii) NOX SIP Call Inventory source identification number ('POINTID'); and

(iv) 2007 Ozone Season Base NOX Emissions.

5 A narrative to describe the manner in which the NOX emission reductions will be achieved;

6 A numerical demonstration of the NOX emission reductions to be achieved that identifies the following for each affected engine or replacement device during a control period:

(i) Maximum hourly emission rate, in lb/hr;

(ii) Maximum design capacity, in brake horsepower;

(iii) NOX potential to emit (based upon 3,672 hours during a control period) for the affected engine or replacement device;

(iv) The baseline utilization of the affected engine that will be removed, if applicable; and

(v) For a replacement device that emits NOX, the maximum operating capacity (in brake horsepower-hours) during a control period.

(c) Modifications.

1 Any person subject to this rule shall submit a request to modify the approved compliance plan if:

(i) An affected engine removed from service for which NOX emission reductions are relied upon for compliance with this rule will be reinstalled and operated within the fine grid during a control period;

(ii) The operating capacity equivalent to a removed affected engine's projected utilization at the location at which the affected engine was located during the baseline period will be replaced, in part or in total, by the installation of another device that is not included in the approved compliance plan; or

(iii) The actual hourly NOX emission rate of an affected engine or replacement device in the approved compliance plan is determined to exceed the applicable hourly NOX emission limitation, except where it has been determined that maintenance or repair of the affected engine or replacement device has reduced the actual hourly NOX emission rate below the applicable hourly NOX emission limitation.

2 A request to modify a compliance plan shall be submitted at least 60 days prior to the control period in which the modification would be applicable, unless another time period is specifically approved by the Director.

(d) Completeness Determination. Within 60 days of receipt of a compliance plan or a request to modify a compliance plan, the Director shall notify the person in writing of the completeness of the submitted plan.

(e) Approval. A compliance plan shall be considered approvable if:

1 All permits required by subparagraph (3)(d) have been modified, issued, or voided, as applicable;

2 All performance tests required by paragraph (5) have been conducted, reviewed, and accepted; and

3 The plan establishes that demonstrable and enforceable NOX emission reductions required by subparagraph (3)(a) would be achieved.

(5) Performance Testing.

(a) Any person subject to this rule which relies upon NOX emission reductions achieved from an affected engine in accordance with subparagraph (3)(b)1. or a replacement device in accordance with subparagraph (3)(b)2. or (3)(b)4. to comply with this rule shall conduct a performance test in accordance with EPA Reference Method 7E or 20, as appropriate, found at Appendix A of 40 CFR 60 on the affected engine or replacement device to determine the actual hourly NOX emission rate, in lb/hr.

(b) The performance test shall be conducted at least 60 days, but not more than one year, prior to the first control period for which NOX emission reductions are to be achieved by that affected engine or replacement device, unless another period of time is specifically approved by the Director.

(c) At least 30 days prior to conducting the test, the person subject to this rule shall submit written notification of testing to the Director. To avoid problems concerning testing methods and procedures, the following shall be included with the notification letter:

1 The date the test crew is expected to arrive, the date and time anticipated of the start of the first run, and the names of the persons and/or testing company that will conduct the tests.

2 A complete description of each sampling train to be used, including type of media used in determining gas stream components, type of probe lining, type of filter media, and probe cleaning method and solvent to be used (if test procedure requires probe cleaning).

3 A sketch or sketches showing sampling point locations and their relative positions to the nearest upstream and downstream gas flow disturbances.

(6) Emission Monitoring. For any affected engine or NOX emitting replacement device that operates during a control period from which demonstrable and enforceable NOX emission reductions are to be achieved, the person subject to this rule shall conduct emission monitoring in accordance with one of the following:

(a) Conduct emission testing on that affected engine or NOX emitting replacement device at least once during each control period, or at least once during the six-month period preceding the first day of the control period. Emission testing shall be conducted in accordance with EPA Reference Method 7E or 20, as appropriate, found at Appendix A of 40 CFR 60 or an alternative EPA-approved method approved by the Director. Notification of emission testing shall be made in accordance with the requirements of subparagraph (5)(c);

(b) Install and operate during each control period a continuous emission monitoring system that complies with Part 60 or Part 75 of the Code of Federal Regulations; or

(c) Implement a parametric emission monitoring system based upon actual emission testing and correlations with operating parameters. The installation, implementation, and use of any parametric emission monitoring system must be approved by the Director in writing prior to implementation.

(7) Recordkeeping and Reporting.

(a) The person subject to this rule shall maintain records of the following for each affected engine or replacement device from which demonstrable and enforceable NOX emission reductions are to be achieved during each control period:

1 Identification and location of each affected engine or replacement device;

2 Calendar date of record;

3 Number of hours operated during the control period;

4 Type and quantity of fuel used during the control period

5 Date and results of each emissions-related inspection and a summary of any emissions-related corrective maintenance, if taken;

6 The results of all emission tests; and

7 Additional information described in any compliance plan pursuant to paragraph (4) or parametric emission monitoring system approved pursuant to subparagraph (6)(c).

(b) Records required by subparagraph (a) above shall be maintained at the facility at which the affected engine or replacement device is located for a period of five (5) calendar years from the date of generation of each record. The records shall be made available for inspection upon request.

(c) The person subject to this rule shall submit a report of the results of each emission test conducted in accordance with paragraph (5) or subparagraph (6)(a) to the Director within 30 days of the completion of the actual test, unless an extension of time is specifically approved by the Director.

Author: Ronald W. Gore.
Statutory Authority: Code of Alabama 1975, §§22-28-10, 22-28-11, 22-28-14, 22-28-16, 22-28-18, 22-28-20, 22-28-22, 22-22A-5, 22-22A-6, and 22-22A-8.
History: Effective Date: March 22, 2005.
Amended:

335-3-8-.05 New Combustion Sources.

(1) No person shall cause or permit emissions of nitrogen oxides from a new gas-fired boiler with a capacity of 250 million BTU/hr or more in excess of 0.20 pounds per million BTU of heat input per hour.

(2) No person shall cause or permit emissions of nitrogen oxides from a new oil-fired boiler with a capacity of 250 million BTU/hr or more in excess of 0.30 pounds per million BTU of heat input per hour.

(3) No person shall cause or permit emission of nitrogen oxides from a new coal-fired boiler with a capacity of 250 million BTU per hour or more in excess of 0.7 pounds per million BTU of heat input per hour.

(4) For purposes of this rule, the total heat input from all similar fuel combustion units at a plant or premises shall be used for determining the maximum allowable emission of nitrogen oxides that passes through a stack or stacks.

Author: James W. Cooper and John E. Daniel.
Statutory Authority: Code of Alabama 1975, §§22-28-14, 22-22A-5, 22-22A-6, and 22-22A-8.
History: Effective Date: January 18, 1972.
Amended: April 6, 2001; January 16, 2012.

335-3-8-.06 Standards for New Combined-Cycle Electric Generating Units.

(1) Applicability. The requirements of this rule apply to all natural gas- fired and fuel oil-fired combined-cycle electric generating units which commence operation on or after April 1, 2003. The requirements of this rule do not pre-empt the applicability of any other State or Federal regulations.

(2) Definitions. For the purposes of this rule, the following definitions apply:

(a) "Combined-Cycle Electric Generating Unit" means a system comprised of one or more combustion turbines, heat recovery steam generators, and steam turbines configured to improve overall efficiency of electricity generation or steam production.

(b) "Commence Operation" means to have begun to produce steam, gas, or other heated medium used to generate electricity for use or sale, including test generation.

(c) "Fuel Oil" means any petroleum-based fuel (including diesel fuel) as defined by the American Society for Testing and Materials in ASTM D396-90a, "Standard Specification for Fuel Oils".

(d) "Natural Gas" means a naturally fluid mixture of hydrocarbons (e.g., methane, ethane, or propane) produced in geological formations beneath the Earth's surface that maintains a gaseous state at standard atmospheric temperature and pressure under ordinary conditions. Natural gas contains 20.0 grains or less of total sulfur per 100 standard cubic feet. Additionally, natural gas must either be composed of at least 70 percent methane by volume or have a gross calorific value between 950 and 1100 Btu per standard cubic foot. Natural gas does not include the following gaseous fuels: landfill gas, digester gas, refinery gas, sour gas, blast furnace gas, coal-derived gas, producer gas, coke oven gas, or any gaseous fuel produced in a process which might result in highly variable sulfur content or heating value.

(3) Emission Limitations.

(a) No person shall cause or permit the emissions of nitrogen oxides from combined-cycle electric generating units fired by natural gas in excess of 4.0 ppmvd at 15% O_2.

(b) No person shall cause or permit the emissions of nitrogen oxides from combined-cycle electric generating units fired by fuel oil in excess of 15.0 ppmvd at 15% O_2.

(4) Compliance Method. Compliance with the nitrogen oxides emissions limitations in paragraph (3) of this rule shall be determined by EPA Reference Method 20 as found in 40 CFR 60, Appendix A [and incorporated by reference in rule 335-3-10-.03(1)].

Author: Ronald W. Gore.
Statutory Authority: Code of Alabama 1975, §§22-28-10, 22-28-11, 22-28-14, 22-28-18, 22-28-20, 22-28-22, 22-22A-5, 22-22A-6, and 22-22A-8.
History: Effective Date: January 23, 2003.
Amended: January 16, 2012.

335-3-8-.07 TR NOx Annual Trading Program - Purpose and Definitions.

(1) Purpose. Rules 335-3-8-.07 through 335-3-8-.38 set forth the general, designated representative, allowance, and monitoring provisions for the Transport Rule (TR) NOx Annual Trading Program under section 110 of the Clean Air Act, as a means of mitigating interstate transport of fine particulates and nitrogen oxides.

(2) Definitions. For the purpose of rules 335-3-8-.07 through 335-3-8-.38, the definitions listed in 40 CFR §97.402, Subpart AAAAA as of July 1, 2015, will apply.

(a) "Department" shall mean the Alabama Department of Environmental Management.

(b) Word, Phrase, and Rule Substitutions. For the purpose of rule 335- 3-8-.07 substitute:

1 Adem Administrative Code r. 335-3-8-.08 for 40 CFR §97.404.

2 Adem Administrative Code r. 335-3-8-.08(1)(b)2.(ii) and (iii) for 40 CFR §§97.404(b)(2)(i)(B) and (ii).

3 Adem Administrative Code r. 335-3-8-.09 for 40 CFR §97.405.

4 Adem Administrative Code r. 335-3-8-.13(1) for 40 CFR §97.410(a).

5 Adem Administrative Code r. 335-3-8-.13(2) for 40 CFR §97.410(b).

6 Adem Administrative Code r. 335-3-8-.14 for 40 CFR §97.411.

7 Adem Administrative Code r. 335-3-8-.14 for 40 CFR §97.412.

8 Adem Administrative Code r. 335-3-16-.01 for 40 CFR §70.2.

(3) Measurements, Abbreviations, and Acronyms. Measurements, abbreviations, and acronyms used in this rule and in rules 335-3-8-.07 through 335-3-8-.38 are defined as follows:

(a) Btu - British thermal unit.

(b) CO2 – carbon dioxide

(c) H2O – water

(d) hr – hour

(e) kW – kilowatt electrical

(f) kWh – kilowatt hour

(g) lb – pound

(h) mmBtu – million Btu

(i) MWe – megawatt electrical

(j) MWh – megawatt hour

(k) NOx – nitrogen oxides

(l) O2 – oxygen

(m) ppm – parts per million

(n) scfh – standard cubic feet per hour

(o) SO2 – sulfur dioxide

(p) yr – year

Author: Ronald W. Gore.
Statutory Authority: Code of Alabama 1975, §§22-28-10, 22-28-11, 22-28-14, 22-28-18, 22-28-20, 22-28-22, 22-22A-5, 22-22A-6, and 22-22A-8.
History: Effective Date: November 24, 2015.

335-3-8-.08 TR NOx Annual Trading Program – Applicability.

(1) Applicability.

(a) Except as provided in subparagraph (b) of this paragraph:

1 The following units in the State of Alabama shall be TR NOX Annual units, and any source that includes one or more such units shall be a TR NOX Annual source, subject to the requirements of rules 335-3-8-.07 through 335-3-8-.38: any stationary, fossil-fuel-fired boiler or stationary, fossil-fuel-fired combustion turbine serving at any time, on or after January 1, 2005, a generator with nameplate capacity of more than 25 MWe producing electricity for sale.

2 If a stationary boiler or stationary combustion turbine that, under subparagraph (a)1. of this paragraph, is not a TR NOX Annual unit begins to combust fossil fuel or to serve a generator with nameplate capacity of more than 25 MWe producing electricity for sale, the unit shall become a TR NOX Annual unit as provided in subparagraph (a)1. of this paragraph on the first date on which it both combusts fossil fuel and serves such generator.

(b) Any unit in the State that otherwise is a TR NOX Annual unit under subparagraph (a) of this paragraph and that meets the requirements set forth in subparagraphs (b)1.(i) and (ii) or (b)2.(i) and (ii) of this paragraph shall not be TR NOX Annual units:

1 Any unit:

(i) Qualifying as a cogeneration unit throughout the later of 2005 or the 12-month period starting on the date the unit first produces electricity and continuing to qualify as a cogeneration unit throughout each calendar year ending after the later of 2005 or such 12-month period; and

(ii) Not supplying in 2005 or any calendar year thereafter more than one-third of the unit's potential electric output capacity or 219,000 MWh, whichever is greater, to any utility power distribution system for sale.

(iii) If, after qualifying under subparagraphs (b)1.(i) and (ii) of this paragraph as not being a TR NOX Annual unit, a unit subsequently no longer meets all the requirements of subparagraphs (b)1.(i) and (ii) of this paragraph, the unit shall become a TR NOX Annual unit starting on the earlier of January 1 after the first calendar year during which the unit first no longer qualifies as a cogeneration unit or January 1 after the first calendar year during which the unit no longer meets the requirements of subparagraph (b)1.(ii) of this paragraph. The unit shall thereafter continue to be a TR NOX Annual unit.

2 Any unit:

(i) Qualifying as a solid waste incineration unit throughout the later of 2005 or the 12-month period starting on the date the unit first produces electricity and continuing to qualify as a solid waste incineration unit throughout each calendar year ending after the later of 2005 or such 12-month period; and

(ii) With an average annual fuel consumption of fossil fuel for the first 3 consecutive calendar years of operation starting no earlier than 2005 of less than 20 percent (on a Btu basis) and an average annual fuel consumption of fossil fuel for any 3 consecutive calendar years thereafter of less than 20 percent (on a Btu basis).

(iii) If, after qualifying under subparagraphs (b)2.(i) and (ii) of this paragraph as not being a TR NOX Annual unit, a unit subsequently no longer meets all the requirements of subparagraphs (b)2.(i) and (ii) of this paragraph, the unit shall become a TR NOX Annual unit starting on the earlier of January 1 after the first calendar year during which the unit first no longer qualifies as a solid waste incineration unit or January 1 after the first 3 consecutive calendar years after 2005 for which the unit has an average annual fuel consumption of fossil fuel of 20 percent or more. The unit shall thereafter continue to be a TR NOX Annual unit.

(c) A certifying official of an owner or operator of any unit or other equipment may submit a petition (including any supporting documents) to the Administrator at any time for a determination concerning the applicability, under subparagraphs (a) and (b) of this paragraph to the unit or other equipment. The certifying official of an owner or operator of any unit or other equipment shall submit a copy of the petition (including any supporting documents) to the Department.

1 Petition content. The petition shall be in writing and include the identification of the unit or other equipment and the relevant facts about the unit or other equipment. The petition and any other documents provided to the Department and the Administrator in connection with the petition shall include the following certification statement, signed by the certifying official: “I am authorized to make this submission on behalf of the owners and operators of the unit or other equipment for which the submission is made. I certify under penalty of law that I have personally examined, and am familiar with, the statements and information submitted in this document and all it attachments. Based on my inquiry of those individuals with primary responsibility for

obtaining the information, I certify that the statements and information are to the best of my knowledge and belief true, accurate, and complete. I am aware that there are significant penalties for submitting false statements and information or omitting required statements and information, including the possibility of fine or imprisonment."

2 Response. The Administrator will issue a written response to the petition and may request supplemental information determined by the Administrator to be relevant to such petition. The Administrator's determination concerning the applicability, under subparagraphs (1)(a) and (b) of this rule, of the TR NOX Annual Trading Program to the unit or other equipment shall be binding on Alabama, the Department, and any other State or permitting authority unless the Administrator determines that the petition contained significant, relevant errors or omissions.

Author: Ronald W. Gore.
Statutory Authority: Code of Alabama 1975, §§22-28-10, 22-28-11, 22-28-14, 22-28-18, 22-28-20, 22-28-22, 22-22A-5, 22-22A-6, and 22-22A-8.
History: Effective Date: November 24, 2015.

335-3-8-.09 TR NOx Annual Trading Program- Retired Unit Exemption.

(1) Any TR NOX Annual unit that is permanently retired shall be exempt from 40 CFR §§97.406(b) and (c)(1), rule 335-3-8-.27, and rules 335-3-8-.33 through 335-3-8-.38.

(a) The exemption under paragraph (1) of this rule shall become effective the day on which the TR NOX Annual unit is permanently retired. Within 30 days of the unit's permanent retirement, the designated representative shall submit a statement to the Administrator. The statement shall state, in a format prescribed by the Administrator, that the unit was permanently retired on a specified date and will comply with the requirements of paragraph (2) of this rule. The designated representative shall submit a copy of the statement to the Department.

(2) Special provisions.

(a) A unit exempt under paragraph (1) of this rule shall not emit any NOX, starting on the date that the exemption takes effect.

(b) For a period of 5 years from the date the records are created, the owners and operators of a unit exempt under paragraph (1) of this rule shall retain, at the source that includes the unit, records demonstrating that the unit is permanently retired. The 5-year period for keeping records may be extended for cause, at any time before the end of the period, in writing by the Administrator. The owners and operators bear the burden of proof that the unit is permanently retired.

(c) The owners and operators and, to the extent applicable, the designated representative of a unit exempt under paragraph (1) of this rule shall comply with the requirements of the TR NOX Annual Trading Program concerning all periods for which the exemption is not in effect, even if such requirements arise, or must be complied with, after the exemption takes effect.

(d) A unit exempt under paragraph (1) of this rule shall lose its exemption on the first date on which the unit resumes operation. Such unit shall be treated, for purposes of applying allocation, monitoring, reporting, and recordkeeping requirements under the TR NOX Annual Trading Program, as a unit that commences commercial operation on the first date on which the unit resumes operation.

Author: Ronald W. Gore.
Statutory Authority: Code of Alabama 1975, §§22-28-10, 22-28-11, 22-28-14, 22-28-18, 22-28-20, 22-28-22, 22-22A-5, 22-22A-6, and 22-22A-8.
History: Effective Date: November 24, 2015.

335-3-8-.10 TR NOx Annual Trading Program - Standard Requirements.

(1) General. The Environmental Protection Agency's Standard Requirements for TR NOX Sources, are incorporated by reference as they exist in 40 CFR §97.406, Subpart AAAAA as of July 1, 2015. (The materials incorporated by reference are available for purchase and inspection at the Department's offices.)

(2) Word, Phrase, and Rule Substitutions. For the purpose of rule 335- 3-8-.10 substitute:

(a) Adem Administrative Code r. 335-3-16-.13(3) for 40 CFR §70.7(e)(2).

(b) Adem Administrative Code r. 335-3-16-.13(3)(a)2. For 40 CFR §70.7(e)(2)(i)(B).

(c) Adem Administrative Code r. 335-3-8-.14 for 40 CFR §§97.411(a)(2) and (b).

(d) Adem Administrative Code r. 335-3-8-.14 for 40 CFR §97.412.

(e) Adem Administrative Code r. 335-3-8-.09 for 40 CFR §97.405.

(f) Adem Administrative Code r. 335-3-8-.13(1) for 40 CFR §97.410(a).

(g) Adem Administrative Code r. 335-3-8-.13(2) for 40 CFR §97.410(b).

Author: Ronald W. Gore.
Statutory Authority: Code of Alabama 1975, §§22-28-10, 22-28-11, 22-28-14, 22-28-18, 22-28-20, 22-28-22, 22-22A-5, 22-22A-6, and 22-22A-8.
History: Effective Date: November 24, 2015.

335-3-8-.11 TR NOx Annual Trading Program – Computation of Time.

(1) General. The Environmental Protection Agency Regulations governing Computation of Time under the TR NOX Annual Trading Program, are incorporated by reference as they exist in 40 CFR §97.407, Subpart AAAAA as of July 1, 2015. (The materials incorporated by reference are available for purchase and inspection at the Department's offices.)

Author: Ronald W. Gore.
Statutory Authority: Code of Alabama 1975, §§22-28-10, 22-28-11, 22-28-14, 22-28-18, 22-28-20, 22-28-22, 22-22A-5, 22-22A-6, and 22-22A-8.
History: Effective Date: November 24, 2015.

335-3-8-.12 Administrative Appeal Procedures.

(1) The appeal procedures for decisions of the Administrator under rules 335-3-8-.07 through 335-3-8-.38 are set forth in 40 CFR 78.

Author: Ronald W. Gore.
Statutory Authority: Code of Alabama 1975, §§22-28-10, 22-28-11, 22-28-14, 22-28-18, 22-28-20, 22-28-22, 22-22A-5, 22-22A-6, and 22-22A-8.
History: Effective Date: November 24, 2015.

335-3-8-13. NOx Annual Trading Budgets and Variability Limits.

(1) The State NOX Annual trading budgets for allocations of TR NOX Annual allowances for the control periods in 2017 and thereafter is 71,962 tons.

(2) The State NOX annual variability limit for the State NOX Annual trading budgets for the control periods in 2017 and thereafter is 12,953 tons.

Author: Ronald W. Gore.
Statutory Authority: Code of Alabama 1975, §§22-28-10, 22-28-11, 22-28-14, 22-28-18, 22-28-20, 22-28-22, 22-22A-5, 22-22A-6, and 22-22A-8.
History: Effective Date: November 24, 2015.

335-3-8-.14 TR NOx Annual Allowance Allocations.

(1) State Annual Trading Program Budget. The State trading budget for annual allocations of Transport Rule (TR) NOx Annual allowances for the control periods 2017 and thereafter is 71,962 tons.

(2) Timing Requirements for NOx Allowance Allocations.

(a) By June 1, 2016, the Department will submit to the Administrator, in a format prescribed by the Administrator, the annual NOx allowance allocations, in accordance with paragraph (3) of this rule, for the control periods

in 2017 and 2018.

(b) By June 1, 2017, the Department will submit to the Administrator, in a format prescribed by the Administrator, the annual NOx allowance allocations, in accordance with paragraph (3) of this rule, for the control periods in 2019 and 2020.

(c) By June 1, 2018, the Department will submit to the Administrator, in a format prescribed by the Administrator, the annual NOx allowance allocations, in accordance with paragraph (3) of this rule, for the control periods in 2021 and 2022.

(d) By June 1, 2019, and every other year thereafter, the Department shall submit to the Administrator, in a format prescribed by the Administrator, the annual NOx allowance allocations, in accordance with paragraph (3) of this rule, for the control periods in the two years that are four and five years after the year of the applicable deadline for submission under this paragraph.

(3) NOx Allowance Allocations.

(a) Definitions. For the purpose of this rule, the following definitions apply:

1. Baseline TR NOx Unit. A TR NOx unit that either:

(i) Commenced operation on or before January 1, 2014; or

(ii) Submitted a permit application to the Department that was affirmatively deemed complete by the Department in writing on or before January 1, 2014.

2. New TR NOx Unit. A TR NOx unit that does not meet the definition of a Baseline TR NOx Unit as defined in subparagraph (3)(a)1. of this paragraph.

(b) Determination of Heat Input.

1. The heat input (in mmBtu) used for calculating TR NOx allowance allocations under subparagraph (2)(a) of this rule that are to be submitted to the Administrator by June 1, 2016 will be:

(i) For a Baseline TR NOx unit, the average of the three (or less, if applicable) highest amounts of the unit's heat input for the control periods, in which the unit operated, in 2010, 2011, 2012, 2013, and 2014; or

(ii) For a Baseline TR NOx unit that did not commence operation on or before January 1, 2014, but had submitted a permit application to the Department that was affirmatively deemed complete by the Department in writing on or before January 1, 2014, the expected actual annual heat input based on actual utilization data of similar sources.

(iii) For a New TR NOx unit, the expected actual annual heat input based on

actual utilization data of similar sources.

2. The heat input (in mmBtu) used for calculating TR NOx allowance allocations under subparagraph (2)(b) of this rule that are to be submitted to the Administrator by June 1, 2017 will be:

(i) For a Baseline TR NOx unit, the average of the three (or less, if applicable) highest amounts of the unit's heat input for the control periods, in which the unit operated, in 2011, 2012, 2013, 2014, and 2015; or

(ii) For a Baseline TR NOx unit that did not commence operation on or before January 1, 2015, but had submitted a permit application to the Department that was affirmatively deemed complete by the Department in writing on or before January 1, 2014, the expected actual annual heat input based on actual utilization data of similar sources.

(iii) For a New TR NOx unit that commenced operation on or before January 1, 2015, the average of the three (or less, if applicable) highest amounts of the unit's heat input for the control periods, in which the unit operated in 2014 and 2015.

(iv) For a New TR NOx unit that did not commence operation on or before January 1, 2015, the expected actual annual heat input based on actual utilization data of similar sources.

3. The heat input (in mmBtu) used for calculating TR NOx allowance allocations under subparagraph (2)(c) of this rule that are to be submitted to the Administrator by June 1, 2018 will be:

(i) For a Baseline TR NOx unit, the average of the three (or less, if applicable) highest amounts of the unit's heat input for the control periods, in which the unit operated in 2012, 2013, 2014, 2015, and 2016.

(ii) For a New TR NOx unit that commenced operation on or before January 1 2016, the average of the three (or less, if applicable) highest amounts of the unit's heat input, in which the unit operated in 2014, 2015, and 2016.

(iii) For a New TR NOx unit that did not commence operation on or before January 1, 2016, the expected actual annual heat input based on actual utilization data of similar sources.

4. The heat input (in mmBtu) used for calculating TR NOx allowance allocations under subparagraph (2)(d) of this rule that are to be submitted to the Administrator by June 1, 2019, and all subsequent allocation years will be:

(i) For a Baseline TR NOx unit, the average of the three (or less, if applicable) highest amounts of the unit's heat input, in which the unit operated for the five most recent control periods available prior to the deadline submission year.

(ii) For a New TR NOx unit that commenced operation prior to January 1 of the most recent control period available prior to the submission year, the average of the three (or less, if applicable) highest amounts of the unit's heat input, in which the unit operated, for the five most recent control periods available prior to the submission year; or

(iii) For a New TR NOx unit that did not commence operation prior to January 1 of the most recent control period available prior to the submission year, the expected actual annual heat input based on actual utilization data of similar sources.

5. The unit's total heat input for the control period in each year specified under subparagraph (b) of this paragraph will be determined in accordance with 40 CFR 75 if the TR NOx unit was otherwise subject to the requirements of 40 CFR 75 for the year, or will be based on the best available data reported to the Administrator and the Department for the unit if the unit was not otherwise subject to the requirements of 40 CFR 75 for the year.

(c) Establishment of Baseline and Retired Unit Allowance Pools. At the time Transport Rule (TR) annual NOx allowances are initially allocated to baseline TR NOx units under subparagraph (2)(a) of this rule, each unit's allocation will be permanently recorded as that unit's "Baseline Allowance". This value will be used to calculate the following:

1. Baseline Allowance Pool. The Baseline Allowance Pool shall be calculated each time TR annual NOx allowances are allocated under paragraph (2) of this rule and shall equal the State Annual Trading Program Budget minus the total of the Baseline Allowances for all baseline TR NOx units that have retired in accordance with Rule 335-3-8-.09.

2. Retired Unit Allowance Pool. The Retired Unit Allowance Pool shall be calculated each time TR NOx allowances are allocated under paragraph (2) of this rule and shall equal the sum of the Baseline Allowances for all TR NOx units that have retired in accordance with Rule 335-3-8-.09.

(d) Maximum Historic Emission Cap. The maximum historic emission cap is identified by using an 8 year historic emission period for each TR NOx unit. The last year of the 8 year period will be the same year as the last year used for determination of heat input under paragraph (3)(b) of this rule. The maximum historic emission cap is the maximum NOx emissions (in tons) that occurred during any control period during the 8 year historic emission period. Data used for this purpose shall be obtained from the EPA Clean Air Markets Division (CAMD). An additional emission cap may be applied if a TR NOx unit has an enforcement action or permit limit in place. The 8 year historic emission values will update every two years to coincide with the allocation control period.

(e) Calculation of TR NOx Allowances for Baseline TR NOx Units.

1. For each control period under paragraph (2) of this rule, the Department will allocate TR NOx allowances from the Baseline Allowance Pool to all baseline TR NOx units in accordance with the following procedures:

(i) The Department will allocate TR NOx allowances to each TR NOx unit under Rule 335-3-8-.08(1)(a) in an amount equaling the unit's share of the State's total 3 year average of heat input determined in accordance with subparagraph (b) of this paragraph, multiplied by the baseline allowance pool. If a TR NOx unit has an initial historic heat input based allocation that exceeds its maximum historic emission cap as defined in subparagraph (3)(e) of this paragraph, then its allocation will equal the maximum historic emission cap for that TR NOx unit.

(ii) Allocations remaining after the application of the maximum historic emission cap are reapportioned on the same basis to baseline TR NOx units whose historic heat input based allocation does not exceed its maximum historic emission cap, if applicable. These steps are repeated until the entire Baseline Allocation Pool is allocated. The resulting TR NOx allocation value is rounded to the nearest whole ton.

(f) Calculation of NOx Allowances for New TR NOx Units. For each control period under paragraph (2) of this rule, after calculating NOx allowances for all baseline TR NOx units that have not retired in accordance with Rule 335-3-8-.9, the Department will allocate NOx allowances in the Retired Unit Allowance Pool to all new TR NOx units, in accordance with the following procedures:

1. For each new TR NOx unit under Rule 335-3-8-.08(1)(a), that commenced operation or submitted a permit application affirmatively deemed complete by the Department in writing on or before March 1 of the year allocations are to be submitted to the Administrator under paragraph (2) of this rule, the number of TR NOx allowances allocated for each applicable control period will be equal to the unit's share of the State's total 3 year average of heat input for all new TR NOx units, determined in accordance with subparagraph of this paragraph multiplied by the Retired Unit Allowance Pool. If a new TR NOx unit has an initial historic heat input based allocation that exceeds its maximum historic emission cap as defined in subparagraph (3)(e) of this paragraph, then its allocation equals the maximum historic emission cap for that TR NOx unit .

2. Allocations remaining after application of the maximum historic emission cap are reapportioned on the same basis to new TR NOx units whose historic heat input based allocation does not exceed its maximum historic emission cap, if applicable. These steps are repeated until the entire Retired Unit Allowance Pool is allocated or until all new units receive allocations equal to its maximum historic emission cap. The resulting TR NOx allocation value is rounded to the nearest whole ton.

(g) Adjustment of Baseline NOx Allowance Allocations. If TR NOx allowances remain in the Retired Unit Allowance Pool after allocations are made to all new

TR NOx units in accordance with subparagraph (f) of this paragraph, these NOx allowances will be allocated on a pro rata basis to the baseline TR NOx units where historic heat input based allocation does not exceed its maximum historic emission cap, for the applicable control periods.

(h) NOx allowances allocated to baseline TR NOx units based on heat inputs determined in accordance with subparagraph (b)1.(ii) or (b)2.(ii) of this paragraph will be held in the State's general account until the unit commences operation, prior to or during the control period for which NOx allowances were allocated. If the unit does not commence operations, the NOx allowances will be transferred by the Department pro rata to Baseline TR NOx units that were allocated NOx allowances in accordance with subparagraph (b)1.(i) or (b)2.(i) of this paragraph, and whose historic heat input based allocation does not exceed its maximum historic emission cap if applicable. By January 30 of the following year, the Department shall notify the Administrator of the appropriate NOx allowance transfers.

1. NOx allowances allocated to new TR NOx units based on heat inputs determined in accordance with subparagraphs (b)1.(iii), (b)2.(iv), (b)3.(iii), or (b)4.(iii) of this paragraph will be held in the State's general account until the unit commences operation, prior to or during the control period for which NOx allowances were allocated. If the unit does not commence operation, the NOx allowances will be transferred by the Department pro rata to Baseline TR NOx units that were allocated NOx allowances in accordance with subparagraphs (b)1.(i) and (ii), (b)2.(i) and (ii), (b)3.(i), or (b)4.(i) of this paragraph, and whose historic heat input based allocation does not exceed its maximum historic emission cap if applicable. By January 30 of the following year, the Department shall notify the Administrator of the appropriate NOx allowance transfers.

2. NOx allowances will not be allocated to TR NOx units that retire under Rule 335-3-8-.09 prior to the date NOx allowance allocations are submitted to the Administrator under subparagraphs (2)(a), (b), (c), or (d) of this rule.

3. The total NOx allowances allocated for any control period in accordance with subparagraphs (3)(f), and (g) of this paragraph shall not exceed the State NOx Annual Trading Program Budget as determined by the applicable, approved State Implementation Plan.

(i) Distribution of remaining TR NOx Annual Allowances. If any TR NOx Annual allowances remain after allocations are completed in subparagraphs (e) through (h) of this paragraph, the remaining allowances shall be distributed proportional to the allocations made in subparagraphs (e) through (h) of this paragraph beyond the unit's historical emissions cap. However, no unit may receive additional allocations that exceed any enforcement cap or permit limitation.

(j) Units Incorrectly Allocated TR NOx Annual Allowances. The procedures for addressing units that were incorrectly allocated TR NOx Annual allowances are incorporated by reference as they exist in 40 CFR §97.411(c), Subpart AAAAA as of July 1, 2015. (The materials incorporated by reference are

available for purchase and inspection at the Department's offices.)

Author: Ronald W. Gore.
Statutory Authority: Code of Alabama 1975, §§22-28-10, 22-28-11, 22-28-14, 22-28-18, 22-28-20, 22-28-22, 22-22A-5, 22-22A-6, and 22-22A-8.
History: Effective Date: November 24, 2015. **Amended:** Filed: October 23, 2018; Effective: December 7, 2018.

335-3-8-.15 Reserved.

335-3-8-.16 Authorization of Designated Representative and Alternate Designated Representative.

(1) General. The Environmental Protection Agency Regulations governing the authorization of Designated Representative and Alternate Designated Representative for TR NOX Sources, are incorporated by reference as they exist in 40 CFR §97.413, Subpart AAAAA as of July 1, 2015. (The materials incorporated by reference are available for purchase and inspection at the Department's offices.)

Author: Ronald W. Gore.
Statutory Authority: Code of Alabama 1975, §§22-28-10, 22-28-11, 22-28-14, 22-28-18, 22-28-20, 22-28-22, 22-22A-5, 22-22A-6, and 22-22A-8.
History: Effective Date: November 24, 2015.

335-3-8-.17 Responsibilities of Designated Representative and Alternate Designated Representative.

(1) General. The Environmental Protection Agency Regulations governing the Responsibilities of Designated Representative and Alternate Designated Representative for TR NOX Sources, are incorporated by reference as they exist in 40 CFR §97.414, Subpart AAAAA as of July 1, 2015. (The materials incorporated by reference are available for purchase and inspection at the Department's offices.)

Author: Ronald W. Gore.
Statutory Authority: Code of Alabama 1975, §§22-28-10, 22-28-11, 22-28-14, 22-28-18, 22-28-20, 22-28-22, 22-22A-5, 22-22A-6, and 22-22A-8.
History: Effective Date: November 24, 2015.

335-3-8-.18 Changing Designated Representative and Alternate Designated Representative; Changes in Owners and Operators; Changes in Units at the Source.

(1) General. The Environmental Protection Agency Regulations governing Changing Designated Representative and Alternate Designated Representative; Changes in Owners and Operators; Changes in Units at the Source for TR NOX

Sources, are incorporated by reference as they exist in 40 CFR §97.415, Subpart AAAAA as of July 1, 2015. (The materials incorporated by reference are available for purchase and inspection at the Department's offices.)

Author: Ronald W. Gore.
Statutory Authority: Code of Alabama 1975, §§22-28-10, 22-28-11, 22-28-14, 22-28-18, 22-28-20, 22-28-22, 22-22A-5, 22-22A-6, and 22-22A-8.
History: Effective Date: November 24, 2015.

335-3-8-.19 Certificate of Representation.

(1) General. The Environmental Protection Agency Regulations governing Certificate of Representation, are incorporated by reference as they exist in 40 CFR §97.416, Subpart AAAAA as of July 1, 2015. (The materials incorporated by reference are available for purchase and inspection at the Department's offices.)

Author: Ronald W. Gore.
Statutory Authority: Code of Alabama 1975, §§22-28-10, 22-28-11, 22-28-14, 22-28-18, 22-28-20, 22-28-22, 22-22A-5, 22-22A-6, and 22-22A-8.
History: Effective Date: November 24, 2015.

335-3-8-.20 Objections Concerning Designated Representative and Alternate Designated Representative.

(1) General. The Environmental Protection Agency Regulations governing Objections Concerning Designated Representative and Alternate Designated Representative, are incorporated by reference as they exist in 40 CFR §97.417, Subpart AAAAA as of July 1, 2015. (The materials incorporated by reference are available for purchase and inspection at the Department's offices.)

(2) Word, Phrase, and Rule Substitutions. For the purpose of rule 335- 3-8-.20 substitute:

(a) Only in 40 CFR §97.417(c) substitute "Neither the Administrator nor the Department shall" for "The Administrator will not."

Author: Ronald W. Gore.
Statutory Authority: Code of Alabama 1975, §§22-28-10, 22-28-11, 22-28-14, 22-28-18, 22-28-20, 22-28-22, 22-22A-5, 22-22A-6, and 22-22A-8.
History: Effective Date: November 24, 2015.

335-3-8-.21 Delegation by Designated Representative and Alternate Designated Representative.

(1) General. The Environmental Protection Agency Regulations governing Delegation by Designated Representative and Alternate Designated

Representative, are incorporated by reference as they exist in 40 CFR §97.418, Subpart AAAAA as of July 1, 2015. (The materials incorporated by reference are available for purchase and inspection at the Department's offices.)

Author: Ronald W. Gore.
Statutory Authority: Code of Alabama 1975, §§22-28-10, 22-28-11, 22-28-14, 22-28-18, 22-28-20, 22-28-22, 22-22A-5, 22-22A-6, and 22-22A-8.
History: Effective Date: November 24, 2015.

335-3-8-.22 Reserved.

335-3-8-.23 Establishment of Compliance Accounts, Assurance Accounts, and General Accounts.

(1) General. The Environmental Protection Agency Regulations governing Establishment of Compliance Accounts, Assurance Accounts, and General Accounts, are incorporated by reference as they exist in 40 CFR §97.420, Subpart AAAAA as of July 1, 2015. (The materials incorporated by reference are available for purchase and inspection at the Department's offices.)

(2) Word, Phrase, and Rule Substitutions. For the purpose of rule 335- 3-8-.23 substitute:

(a) Only in 40 CFR §97.420(c)(4)(iii) substitute "Neither the Administrator nor the Department shall" for "The Administrator will not."

Author: Ronald W. Gore.
Statutory Authority: Code of Alabama 1975, §§22-28-10, 22-28-11, 22-28-14, 22-28-18, 22-28-20, 22-28-22, 22-22A-5, 22-22A-6, and 22-22A-8.
History: Effective Date: November 24, 2015.

335-3-8-.24 Recordation of TR NOx Annual Allowance Allocations and Auction Results.

(1) General. The Environmental Protection Agency Regulations governing Recordation of TR NOX Annual Allowance Allocations and Auction Results, are incorporated by reference as they exist in 40 CFR §97.421, Subpart AAAAA as of July 1, 2015, except for the provisions found in 40 CFR §§97.421(a), (b), (h), and (i). (The materials incorporated by reference are available for purchase and inspection at the Department's offices.)

Author: Ronald W. Gore.
Statutory Authority: Code of Alabama 1975, §§22-28-10, 22-28-11, 22-28-14, 22-28-18, 22-28-20, 22-28-22, 22-22A-5, 22-22A-6, and 22-22A-8.
History: Effective Date: November 24, 2015.

335-3-8-.25 Submission of TR NOx Annual Allowance Transfers.

(1) General. The Environmental Protection Agency Regulations governing Submission of TR NOX Annual Allowance Transfers, are incorporated by reference as they exist in 40 CFR §97.422, Subpart AAAAA as of July 1, 2015. (The materials incorporated by reference are available for purchase and inspection at the Department's offices.)

Author: Ronald W. Gore.
Statutory Authority: Code of Alabama 1975, §§22-28-10, 22-28-11, 22-28-14, 22-28-18, 22-28-20, 22-28-22, 22-22A-5, 22-22A-6, and 22-22A-8.
History: Effective Date: November 24, 2015.

335-3-8-.26 Recordation of TR NOx Annual Allowance Transfers.

(1) General. The Environmental Protection Agency Regulations governing, Recordation of TR NOx Annual Allowance Transfers are incorporated by reference as they exist in 40 CFR §97.423, Subpart AAAAA as of July 1, 2015. (The materials incorporated by reference are available for purchase and inspection at the Department's offices.)

Author: Ronald W. Gore.
Statutory Authority: Code of Alabama 1975, §§22-28-10, 22-28-11, 22-28-14, 22-28-18, 22-28-20, 22-28-22, 22-22A-5, 22-22A-6, and 22-22A-8.
History: Effective Date: November 24, 2015.

335-3-8-.27 Compliance with TR NOx Annual Emissions Limitation.

(1) General. The Environmental Protection Agency Regulations governing Compliance with TR NOX Annual Emissions Limitation, are incorporated by reference as they exist in 40 CFR §97.424, Subpart AAAAA as of July 1, 2015. (The materials incorporated by reference are available for purchase and inspection at the Department's offices.)

Author: Ronald W. Gore.
Statutory Authority: Code of Alabama 1975, §§22-28-10, 22-28-11, 22-28-14, 22-28-18, 22-28-20, 22-28-22, 22-22A-5, 22-22A-6, and 22-22A-8.
History: Effective Date: November 24, 2015.

335-3-8-.28 Compliance with TR NOx Annual Assurance Provisions.

(1) General. The Environmental Protection Agency Regulations governing Compliance with TR NOX Annual Assurance Provisions, are incorporated by reference as they exist in 40 CFR §97.425, Subpart AAAAA as of July 1, 2015. (The materials incorporated by reference are available for purchase and inspection at the Department's offices.)

Author: Ronald W. Gore.
Statutory Authority: Code of Alabama 1975, §§22-28-10, 22-28-11, 22-28-14, 22-28-18, 22-28-20, 22-28-22, 22-22A-5, 22-22A-6, and 22-22A-8.
History: Effective Date: November 24, 2015.

335-3-8-.29 Banking.

(1) General. The Environmental Protection Agency Regulations governing Banking for TR NOX Annual Allowance, are incorporated by reference as they exist in 40 CFR §97.426, Subpart AAAAA as of July 1, 2015. (The materials incorporated by reference are available for purchase and inspection at the Department's offices.)

(2) Word, Phrase, and Rule Substitutions. For the purpose of rule 335- 3-8-.29 substitute:

(a) Adem Administrative Code r. 335-3-8-.14(3)(j) for 40 CFR §97.411(c).

Author: Ronald W. Gore.
Statutory Authority: Code of Alabama 1975, §§22-28-10, 22-28-11, 22-28-14, 22-28-18, 22-28-20, 22-28-22, 22-22A-5, 22-22A-6, and 22-22A-8.
History: Effective Date: November 24, 2015.

335-3-8-.30 Account Error.

(1) General. The Environmental Protection Agency Regulations governing Account Error, are incorporated by reference as they exist in 40 CFR §97.427, Subpart AAAAA as of July 1, 2015. (The materials incorporated by reference are available for purchase and inspection at the Department's offices.)

Author: Ronald W. Gore.
Statutory Authority: Code of Alabama 1975, §§22-28-10, 22-28-11, 22-28-14, 22-28-18, 22-28-20, 22-28-22, 22-22A-5, 22-22A-6, and 22-22A-8.
History: Effective Date: November 24, 2015.

335-3-8-.31 Administrator's Action on Submissions.

(1) General. The Environmental Protection Agency Regulations governing Administrator's Action on Submissions, are incorporated by reference as they exist in 40 CFR §97.428, Subpart AAAAA as of July 1, 2015. (The materials incorporated by reference are available for purchase and inspection at the Department's offices.)

Author: Ronald W. Gore.
Statutory Authority: Code of Alabama 1975, §§22-28-10, 22-28-11, 22-28-14, 22-28-18, 22-28-20, 22-28-22, 22-22A-5, 22-22A-6, and 22-22A-8.

History: Effective Date: November 24, 2015.

335-3-8-.32 Reserved.

335-3-8-.33 General Monitoring, Recordkeeping, and Reporting Requirements.

(1) General. The Environmental Protection Agency Regulations governing General Monitoring, Recordkeeping, and Reporting Requirements, are incorporated by reference as they exist in 40 CFR §97.430, Subpart AAAAA as of July 1, 2015. (The materials incorporated by reference are available for purchase and inspection at the Department's offices.)

(2) Word, Phrase, and Rule Substitutions. For the purpose of rule 335- 3-8-.33 substitute:

(a) Adem Administrative Code r. 335-3-8-.09 for 40 CFR §97.405.

Author: Ronald W. Gore.
Statutory Authority: Code of Alabama 1975, §§22-28-10, 22-28-11, 22-28-14, 22-28-18, 22-28-20, 22-28-22, 22-22A-5, 22-22A-6, and 22-22A-8.
History: Effective Date: November 24, 2015.

335-3-8-.34 Initial Monitoring System Certification and Recertification Procedures.

(1) General. The Environmental Protection Agency Regulations governing Initial Monitoring System Certification and Recertification Procedures, are incorporated by reference as they exist in 40 CFR §97.431, Subpart AAAAA as of July 1, 2015. (The materials incorporated by reference are available for purchase and inspection at the Department's offices.)

(2) Word, Phrase, and Rule Substitutions. For the purpose of rule 335- 3-8-.34 substitute:

(a) In §97.431(d)(3)(i) insert ", the Department" after "Office."

Author: Ronald W. Gore.
Statutory Authority: Code of Alabama 1975, §§22-28-10, 22-28-11, 22-28-14, 22-28-18, 22-28-20, 22-28-22, 22-22A-5, 22-22A-6, and 22-22A-8.
History: Effective Date: November 24, 2015.

335-3-8-.35 Monitoring System Out-of-Control Periods.

(1) General. The Environmental Protection Agency Regulations governing Monitoring System Out-of-Control Periods, are incorporated by reference as they exist in 40 CFR §97.432, Subpart AAAAA as of July 1, 2015. (The

materials incorporated by reference are available for purchase and inspection at the Department's offices.)

Author: Ronald W. Gore.
Statutory Authority: Code of Alabama 1975, §§22-28-10, 22-28-11, 22-28-14, 22-28-18, 22-28-20, 22-28-22, 22-22A-5, 22-22A-6, and 22-22A-8.
History: Effective Date: November 24, 2015.

335-3-8-.36 Notifications Concerning Monitoring.

(1) General. The Environmental Protection Agency Regulations Governing Notifications Concerning Monitoring, are incorporated by reference as they exist in 40 CFR §97.433, Subpart AAAAA as of July 1, 2015. (The materials incorporated by reference are available for purchase and inspection at the Department's offices.)

Author: Ronald W. Gore.
Statutory Authority: Code of Alabama 1975, §§22-28-10, 22-28-11, 22-28-14, 22-28-18, 22-28-20, 22-28-22, 22-22A-5, 22-22A-6, and 22-22A-8.
History: Effective Date: November 24, 2015.

335-3-8-.37 Recordkeeping and Reporting.

(1) General. The Environmental Protection Agency Regulations governing Recordkeeping and Reporting, are incorporated by reference as they exist in 40 CFR §97.434, Subpart AAAAA as of July 1, 2015. (The materials incorporated by reference are available for purchase and inspection at the Department's offices.)

Author: Ronald W. Gore.
Statutory Authority: Code of Alabama 1975, §§22-28-10, 22-28-11, 22-28-14, 22-28-18, 22-28-20, 22-28-22, 22-22A-5, 22-22A-6, and 22-22A-8.
History: Effective Date: November 24, 2015.

335-3-8-.38 Petitions for Alternatives to Monitoring, Recordkeeping, or Reporting Requirements.

(1) General. The Environmental Protection Agency Regulations governing Petitions for Alternatives to Monitoring, Recordkeeping, or Reporting Requirements, are incorporated by reference as they exist in 40 CFR §97.435, Subpart AAAAA as of July 1, 2015. (The materials incorporated by reference are available for purchase and inspection at the Department's offices.)

Author: Ronald W. Gore.
Statutory Authority: Code of Alabama 1975, §§22-28-10, 22-28-11, 22-28-14, 22-28-18, 22-28-20, 22-28-22, 22-22A-5, 22-22A-6, and 22-22A-8.
History: Effective Date: November 24, 2015.

335-3-8-.39 TR NOx Ozone Season Group 2 Trading Program – Purpose and Definitions.

(1) Purpose. Rules 335-3-8-.39 through 335-3-8-.70 set forth the general, designated representative, allowance, and monitoring provisions for the Transport Rule (TR) NOx Ozone Season Group 2 Trading Program under section 110 of the Clean Air Act, as a means of mitigating interstate transport of ozone and nitrogen oxides.

(a) Definitions. For the purpose of rules 335-3-8-.39 through 335-3-8-.70 the definitions listed in 40 CFR §97.802, Subpart EEEEE as of October 26, 2016 (81 FR 74504), will apply.

(b) "Department" shall mean the Alabama Department of Environmental Management.

(c) Word, Phrase, and Rule Substitutions. For the purpose of rule 335-3-8-.39 substitute:

1 Adem Administrative Code r. 335-3-8-.40 for 40 CFR §97.804.

2 Adem Administrative Code r. 335-3-8-.40(1)(b)2.(ii) and (iii) for 40 CFR §§97.804(b)(2)(i)(B) and (ii).

3 Adem Administrative Code r. 335-3-8-.41 for 40 CFR §97.805.

4 Adem Administrative Code r. 335-3-8-.45(1) for 40 CFR §97.810(a).

5 Adem Administrative Code r. 335-3-8-.45(2) for 40 CFR §97.810(b).

6 Adem Administrative Code r. 335-3-8-.46 for 40 CFR §97.811.

7 Adem Administrative Code r. 335-3-8-.46 for 40 CFR §97.812.

(2) Measurements, Abbreviations, and Acronyms. Measurements, abbreviations, and acronyms used in this rule and in rules 335-3-8-.39 through 335-3-8-.70 are defined as follows:

(a) Btu - British thermal unit.

(b) CO2 – carbon dioxide

(c) H2O – water

(d) hr – hour

(e) kW – kilowatt electrical

(f) kWh – kilowatt hour

(g) lb – pound

(h) mmBtu – million Btu

(i) MWe – megawatt electrical

(j) MWh – megawatt hour

(k) NOx – nitrogen oxides

(l) O2 – oxygen

(m) ppm – parts per million

(n) scfh – standard cubic feet per hour

(o) SO2 – sulfur dioxide

(p) yr – year

Author: Ronald W. Gore.
Statutory Authority: Code of Alabama 1975, §§22-28-10, 22-28-11, 22-28-14, 22-28-18, 22-28-20, 22-28-22, 22-22A-5, 22-22A-6, and 22-22A-8.
History: Effective Date: November 24, 2015; June 2, 2017.

335-3-8-.40 TR NO_X Ozone Season Group 2 Trading Program – Applicability.

(1) Applicability.

(a) Except as provided in subparagraph (b) of this paragraph:

1 The following units in the State of Alabama shall be TR NO_X Ozone Season Group 2 units, and any source that includes one or more such units shall be a TR NO_X Ozone Season Group 2 source, subject to the requirements of rules 335-3-8-.39 through 335-3-8-.70: any stationary, fossil-fuel-fired boiler or stationary, fossil-fuel-fired combustion turbine serving at any time, on or after January 1, 2005, a generator with nameplate capacity of more than 25 MWe producing electricity for sale.

2 If a stationary boiler or stationary combustion turbine that, under subparagraph (a)1. of this paragraph, is not a TR NO_X Ozone Season Group 2 unit begins to combust fossil fuel or to serve a generator with nameplate capacity of more than 25 MWe producing electricity for sale, the unit shall become a TR NO_X Ozone Season Group 2 unit as provided in subparagraph (a)1. of this paragraph on the first date on which it both combusts fossil fuel and serves such generator.

(b) Any unit in the State that otherwise is a TR NO_X Ozone Season Group 2 unit under subparagraph (a) of this paragraph and that meets the requirements set forth in subparagraphs (b)1.(i) and (ii) or 2.(i) and (ii) of this paragraph shall not be a TR NO_X Ozone Season Group 2 unit:

1. Any unit:

(i) Qualifying as a cogeneration unit throughout the later of 2005 or the 12-month period starting on the date the unit first produces electricity and continuing to qualify as a cogeneration unit throughout each calendar year ending after the later of 2005 or such 12-month period; and

(ii) Not supplying in 2005 or any calendar year thereafter more than one-third of the unit's potential electric output capacity or 219,000 MWh, whichever is greater, to any utility power distribution system for sale.

(iii) If, after qualifying under subparagraphs (b)1.(i) and (ii) of this paragraph as not being a TR NO_X Ozone Season Group 2 unit, a unit subsequently no longer meets all the requirements of subparagraphs (b)1.(i) and (ii) of this paragraph, the unit shall become a TR NO_X Ozone Season Group 2 unit starting on the earlier of January 1 after the first calendar year during which the unit first no longer qualifies as a cogeneration unit or January 1 after the first calendar year during which the unit no longer meets the requirements of subparagraph (b)1.(ii) of this paragraph. The unit shall thereafter continue to be a TR NO_X Ozone Season Group 2 unit.

2 Any unit:

(i) Qualifying as a solid waste incineration unit throughout the later of 2005 or the 12-month period starting on the date the unit first produces electricity and continuing to qualify as a solid waste incineration unit throughout each calendar year ending after the later of 2005 or such 12-month period; and

(ii) With an average annual fuel consumption of fossil fuel for the first 3 consecutive calendar years of operation starting no earlier than 2005 of less than 20 percent (on a Btu basis) and an average annual fuel consumption of fossil fuel for any 3 consecutive calendar years thereafter of less than 20 percent (on a Btu basis).

(iii) If, after qualifying under subparagraphs (b)2.(i) and (ii) of this paragraph as not being a TR NO_X Ozone Season Group 2 unit, a unit subsequently no longer meets all the requirements of subparagraphs (b)2.(i) and (ii) of this paragraph, the unit shall become a TR NO_X Ozone Season Group 2 unit starting on the earlier of January 1 after the first calendar year during which the unit first no longer qualifies as a solid waste incineration unit or January 1 after the first 3 consecutive calendar years after 2005 for which the unit has an average annual fuel consumption of fossil fuel of 20 percent or more. The unit shall thereafter continue to be a TR NO_X Ozone Season Group 2 unit.

(c) A certifying official of an owner or operator of any unit or other equipment may submit a petition (including any supporting documents) to the Administrator at any time for a determination concerning the applicability, under subparagraphs (a) and (b) of this paragraph, to the unit or other equipment. The certifying official of an owner or operator of any unit or other equipment shall submit a copy of the petition (including any supporting documents) to the Department.

1. Petition content. The petition shall be in writing and include the identification of the unit or other equipment and the relevant facts about the unit or other equipment. The petition and any other documents provided to the Department and the Administrator in connection with the petition shall include the following certification statement, signed by the certifying official: "I am authorized to make this submission on behalf of the owners and operators of the unit or other equipment for which the submission is made. I certify under penalty of law that I have personally examined, and am familiar with, the statements and information submitted in this document and all its attachments. Based on my inquiry of those individuals with primary responsibility for obtaining the information, I certify that the statements and information are to the best of my knowledge and belief true, accurate, and complete. I am aware that there are significant penalties for submitting false statements and information or omitting required statements and information, including the possibility of fine or imprisonment."

2. Response. The Administrator will issue a written response to the petition and may request supplemental information determined by the Administrator to be relevant to such petition. The Administrator's determination concerning the applicability, under subparagraphs (1)(a) and (b) of this rule, of the TR NO_X Ozone Season Group 2 Trading Program to the unit or other equipment shall be binding on Alabama, the Department, and any other State or permitting authority unless the Administrator determines that the petition contained significant, relevant errors or omissions.
Author: Ronald W. Gore.
Statutory Authority: Code of Alabama 1975, §§22-28-10, 22-28-11, 22-28-14, 22-28-18, 22-28-20, 22-28-22, 22-22A-5, 22-22A-6, and 22-22A-8.
History: Effective Date: November 24, 2015. **Amended:** Filed: August 21, 2018; Effective: October 5, 2018.

335-3-8-.41 TR NOx Ozone Season Group 2 Trading Program – Retired Unit Exemption.

(1) Any TR NOX Ozone Season Group 2 unit that is permanently retired shall be exempt from 40 CFR §§97.806(b) and (c)(1), rule 335-3-8-.59, and rules 335-3-8-.65 through 335-3-8-.70.

(a) The exemption under paragraph (1) of this rule shall become effective the day on which the TR NOX Ozone Season Group 2 unit is permanently retired. Within 30 days of the unit's permanent retirement, the designated representative shall submit a statement to the Administrator. The statement

shall state, in a format prescribed by the Administrator, that the unit was permanently retired on a specified date and will comply with the requirements of paragraph (2) of this rule. The designated representative shall submit a copy of the statement to the Department.

(2) Special provisions.

(a) A unit exempt under paragraph (1) of this rule shall not emit any NOX, starting on the date that the exemption takes effect.

(b) For a period of 5 years from the date the records are created, the owners and operators of a unit exempt under paragraph (1) of this rule shall retain, at the source that includes the unit, records demonstrating that the unit is permanently retired. The 5-year period for keeping records may be extended for cause, at any time before the end of the period, in writing by the Administrator. The owners and operators bear the burden of proof that the unit is permanently retired.

(c) The owners and operators and, to the extent applicable, the designated representative of a unit exempt under paragraph (1) of this rule shall comply with the requirements of the TR NOX Ozone Season Group 2 Trading Program concerning all periods for which the exemption is not in effect, even if such requirements arise, or must be complied with, after the exemption takes effect.

(d) A unit exempt under paragraph (1) of this rule shall lose its exemption on the first date on which the unit resumes operation. Such unit shall be treated, for purposes of applying allocation, monitoring, reporting, and recordkeeping requirements under TR NOX Ozone Season Group 2 Trading Program, as a unit that commences commercial operation on the first date on which the unit resumes operation.

Author: Ronald W. Gore.
Statutory Authority: Code of Alabama 1975, §§22-28-10, 22-28-11, 22-28-14, 22-28-18, 22-28-20, 22-28-22, 22-22A-5, 22-22A-6, and 22-22A-8.
History: Effective Date: November 24, 2015; June 2, 2017.

335-3-8-.42 TR NOx Ozone Season Group 2 Trading Program – Standard Requirements.

(1) General. The Environmental Protection Agency's Standard Requirements for TR NOX Ozone Season Group 2 sources, are incorporated by reference as they exist in 40 CFR §97.806, Subpart EEEEE as of October 26, 2016 (81 FR 74504). (The materials incorporated by reference are available for purchase and inspection at the Department's offices.)

(2) Word, Phrase, and Rule Substitutions. For the purpose of rule 335- 3-8-8-.42 substitute:

(a) Adem Administrative Code r. 335-3-16-.13(3) for 40 CFR §70.7(e)(2).

(b) Adem Administrative Code r. 335-3-16-.13(3)(a)2. For 40 CFR §70.7(e)(2)(i)(B).

(c) Adem Administrative Code r. 335-3-8-.46 for 40 CFR §§97.811(a)(2) and (b).

(d) Adem Administrative Code r. 335-3-8-.46 for 40 CFR §97.812.

(e) Only in 40 CFR §97.806(e) substitute "Administrator or the Department" for "Administrator."

(f) Adem Administrative Code r. 335-3-8-.41 for 40 CFR §97.805.

(g) Adem Administrative Code r. 335-3-8-.45(1) for §97.810(a).

(h) Adem Administrative Code r. 335-3-8-.45(2) for §97.810(b).

Author: Ronald W. Gore.
Statutory Authority: Code of Alabama 1975, §§22-28-10, 22-28-11, 22-28-14, 22-28-18, 22-28-20, 22-28-22, 22-22A-5, 22-22A-6, and 22-22A-8.
History: Effective Date: November 24, 2015; June 2, 2017.

335-3-8-.43 TR NOx Ozone Season Group 2 Trading Program – Computation of Time.

(1) General. The Environmental Protection Agency Regulations governing Computation of Time under the TR NOX Ozone Season Group 2 Trading Program, are incorporated by reference as they exist in 40 CFR §97.807, Subpart EEEEE as of October 26, 2016 (81 FR 74504). (The materials incorporated by reference are available for purchase and inspection at the Department's offices.)

Author: Ronald W. Gore.
Statutory Authority: Code of Alabama 1975, §§22-28-10, 22-28-11, 22-28-14, 22-28-18, 22-28-20, 22-28-22, 22-22A-5, 22-22A-6, and 22-22A-8.
History: Effective Date: November 24, 2015; June 2, 2017.

335-3-8-.44 Administrative Appeal Procedures.

(1) The appeal procedures for the decisions of the Administrator under rules 335-3-8-.39 through 335-3-8-.70 are set forth in 40 CFR 78.

Author: Ronald W. Gore.
Statutory Authority: Code of Alabama 1975, §§22-28-10, 22-28-11, 22-28-14, 22-28-18, 22-28-20, 22-28-22, 22-22A-5, 22-22A-6, and 22-22A-8.
History: Effective Date: November 24, 2015.

335-3-8-.45 NOx Ozone Season Group 2 Trading Budgets and Variability Limits.

(1) The State NOX Ozone Season trading budgets for allocations of TR NOX Ozone Season Group 2 allowances for the control periods in 2017 and thereafter is 13,211 tons.

(2) The State NOX Ozone Season variability limit for the State NOX Ozone Season trading budgets for the control periods in 2017 and thereafter is 2,774 tons.

Author: Ronald W. Gore.
Statutory Authority: Code of Alabama 1975, §§22-28-10, 22-28-11, 22-28-14, 22-28-18, 22-28-20, 22-28-22, 22-22A-5, 22-22A-6, and 22-22A-8.
History: Effective Date: November 24, 2015; June 2, 2017.

335-3-8-.46 TR NOx Ozone Season Group 2 Allowance Allocations.

(1) State NOx Ozone Season Group 2 Trading Program Budget. The State trading budget for annual allocations of Transport Rule (TR) NOx Ozone Season Group 2 allowances for the control periods 2017 and thereafter is 13,211 tons.

(2) Timing Requirements for TR NOx Ozone Season Group 2 Allowance Allocations.

(a) By June 1, 2017, the Department will submit to the Administrator, in a format prescribed by the Administrator, the TR NOx Ozone Season Group 2 allowance allocations, in accordance with paragraph (3) of this rule, for the control periods in 2019 and 2020.

(b) By June 1, 2018, the Department will submit to the Administrator, in a format prescribed by the Administrator, the TR NOx Ozone Season Group 2 allowance allocations, in accordance with paragraph (3) of this rule, for the control periods in 2021 and 2022.

(c) By June 1, 2019, and every other year thereafter, the Department shall submit to the Administrator, in a format prescribed by the Administrator, the TR NOx Ozone Season Group 2 allowance allocations, in accordance with paragraph (3) of this rule, for the control periods in the two years that are four and five years after the year of the applicable deadline for submission under this paragraph.

(3) TR NOx Ozone Season Group 2 Allowance Allocations.

(a) Definitions. For the purpose of this rule, the following definitions apply:

1. Baseline TR NOx Ozone Season Unit. A TR NOx Ozone Season Group 2 unit that either:

(i) Commenced operation on or before May 1, 2014; or

(ii) Submitted a permit application to the Department that was affirmatively deemed complete by the Department in writing on or before May 1, 2014.

2. New TR NOx Ozone Season Unit. A TR NOx Ozone Season Group 2 unit that does not meet the definition of a Baseline TR NOx Ozone Season unit as defined in subparagraph (3)(a)1. of this paragraph.

(b) Determination of Heat Input.

1. The heat input (in mmBtu) used for calculating TR NOx Ozone Season Group 2 allowance allocations under subparagraph (2)(a) of this rule that are to be submitted to the Administrator by June 1, 2017, will be:

(i) For a Baseline TR NOx Ozone Season unit, the average of the three (or less, if applicable) highest amounts of the unit's heat input for the control periods, in which the unit operated, in 2011, 2012, 2013, 2014, and 2015; or

(ii) For a Baseline TR NOx Ozone Season unit that did not commence operation on or before May 1, 2014, but had submitted a permit application to the Department that was affirmatively deemed complete by the Department in writing on or before May 1, 2014, the expected actual ozone season heat input based on actual utilization data of similar sources.

(iii) For a New TR NOx Ozone Season unit, the expected actual ozone season heat input based on actual utilization data of similar sources.

2. The heat input (in mmBtu) used for calculating TR NOx Ozone Season Group 2 allowance allocations under subparagraph (2)(b) of this rule that are to be submitted to the Administrator by June 1, 2018, will be:

(i) For a Baseline TR NOx Ozone Season unit, the average of the three (or less, if applicable) highest amounts of the unit's heat input for the control periods, in which the unit operated, in 2012, 2013, 2014, 2015, and 2016; or

(ii) For a Baseline TR NOx Ozone Season unit that did not commence operation on or before May 1, 2015, but had submitted a permit application to the Department that was affirmatively deemed complete by the Department in writing on or before May 1, 2014, the expected actual ozone season heat input based on actual utilization data of similar sources.

(iii) For a New TR NOx Ozone Season unit that commenced operation on or before May 1, 2016, the average of the three (or less, if applicable) highest amounts of the unit's heat input for the control periods, in which the unit operated in 2015 and 2016.

(iv) For a New TR NOx Ozone Season unit that did not commence operation on or before May 1, 2016, the expected actual ozone season heat input based on actual utilization data of similar sources.

3. The heat input (in mmBtu) used for calculating TR NOx Ozone Season Group 2 allowance allocations under subparagraph (2)(c) of this rule that are to be submitted to the Administrator by June 1, 2019, and all subsequent allocation years will be:

(i) For a Baseline TR NOx Ozone Season unit, the average of the three (or less, if applicable) highest amounts of the unit's heat input for the control periods, in which the unit operated for the five most recent control periods available prior to the deadline submission year.

(ii) For a New TR NOx Ozone Season unit that commenced operation prior to May 1 of the most recent control period available prior to the submission year, the average of the three (or less, if applicable) highest amounts of the unit's heat input for the control periods, in which the unit operated, for the five most recent control periods available prior to the submission year; or

(iii) For a New TR NOx Ozone Season unit that did not commence operation prior to May 1 of the most recent control period available prior to the submission year, the expected actual ozone season heat input based on actual utilization data of similar sources.

4. The unit's total heat input for the control period in each year specified under subparagraph (b) of this paragraph will be determined in accordance with 40 CFR 75 if the TR NOx Ozone Season Group 2 unit was otherwise subject to the requirements of 40 CFR 75 for the year, or will be based on the best available data reported to the Administrator and the Department for the unit if the unit was not otherwise subject to the requirements of 40 CFR 75 for the year.

(c) Establishment of Baseline and Retired Unit Allowance Pools. At the time Transport Rule (TR) NOx Ozone Season Group 2 allowances are initially allocated to Baseline TR NOx Ozone Season units under subparagraph (2)(a) of this rule, each unit's allocation will be permanently recorded as that unit's "Baseline Allowance". This value will be used to calculate the following:

1. Baseline Allowance Pool. The Baseline Allowance Pool shall be calculated each time TR NOx Ozone Season Group 2 allowances are allocated under paragraph (2) of this rule and shall equal the State Ozone Season Group 2 trading program budget minus the total of the Baseline Allowances for all Baseline TR NOx Ozone Season units that have retired in accordance with 335-3-8-.41 and minus 13 allowances set aside for any new TR NOx Oxone Season Group 2 units located in Indian country.

2. Retired Unit Allowance Pool. The Retired Unit Allowance Pool shall be calculated each time TR NOx Ozone Season Group 2 allowances are allocated under paragraph (2) of this rule and shall equal the sum of the Baseline Allowances for all TR NOx Ozone Season Group 2 units that have retired in accordance with 335-3-8-.41.

3. Indian Country New Unit Allowance Pool. A total of 13 TR NOx Ozone Season Group 2 allowances will be initially set aside for any new TR NOx Ozone Season Group 2 units in Indian country. If the Indian country allowances are not allocated by the Administrator and are made available to the Department for allocation, the allowances will be proportionally distributed, to existing units in the state in accordance with subparagraphs (g) and (i) of this paragraph.

(d) Maximum Historic Emission Cap. The Maximum Historic Emission Cap is identified by using an 8 year historic emission period for each TR NOx Ozone Season Group 2 unit. The last year of the 8 year period will be the same year as the last year used for determination of heat input under subparagraph (3)(b) of this paragraph. The Maximum Historic Emission Cap is the maximum NOx emissions (in tons) that occurred during any control period during the 8 year historic emission period. Data used for this purpose shall be obtained from the EPA Clean Air Markets Division (CAMD). An additional emission cap may be applied if a TR NOx Ozone Season Group 2 unit has an enforcement action or permit limit in place. The 8 year historic emission values will update every two years to coincide with the allocation control period.

(e) Calculation of TR NOx Ozone Season Group 2 Allowances for Baseline TR NOx Ozone Season Units.

1. For each control period under paragraph (2) of this rule, the Department will allocate TR NOx Ozone Season Group 2 allowances from the Baseline Allowance Pool to all Baseline TR NOx Ozone Season units in accordance with the following procedures:

(i) The Department will allocate TR NOx Ozone Season Group 2 allowances to each TR NOx Ozone Season Group 2 unit under 335-3-8-.40(1)(a) in an amount equaling the unit's share of the State's total 3 year average of heat input determined in accordance with subparagraph (b) of this paragraph, multiplied by the Baseline Allowance Pool. If a TR NOx Ozone Season Group 2 unit has an initial historic heat input based allocation that exceeds its maximum historic emission cap as defined in subparagraph (3)(e) of this paragraph, then its allocation will equal the maximum historic emission cap for that TR NOx Ozone Season Group 2 unit.

(ii) Allocations remaining after the application of the maximum historic emission cap are reapportioned on the same basis to Baseline TR NOx Ozone Season units whose historic heat input based allocation does not exceed its maximum historic emission cap, if applicable. These steps are repeated until the entire Baseline Allocation Pool is allocated. The resulting TR NOx Ozone Season Group 2 allocation value is rounded to the nearest whole ton.

(f) Calculation of NOx Allowances for New TR NOx Ozone Season Units. For each control period under paragraph (2) of this rule, after calculating NOx allowances for all Baseline TR NOx Ozone Season units that have not retired in accordance with 335-3-8-.41, the Department will allocate NOx allowances in the Retired Unit Allowance Pool to all New TR NOx Ozone Season units, in accordance with the following procedures:

1. For each New TR NOx Ozone Season unit under 335-3-8-.40(1)(a), that commenced operation or submitted a permit application affirmatively deemed complete by the Department in writing on or before March 1 of the year allocations are to be submitted to the Administrator under paragraph (2) of this rule, the number of TR NOx Ozone Season Group 2 allowances allocated for each applicable control period will be equal to the unit's share of the State's total 3 year average of heat input for all New TR NOx Ozone Season units, determined in accordance with subparagraph (b) of this paragraph multiplied by the Retired Unit Allowance Pool. If a New TR NOx Ozone Season unit has an initial historic heat input based allocation that exceeds its maximum historic emission cap as defined in subparagraph (3)(e) of this paragraph, then its allocation equals the maximum historic emission cap for that TR NOx Ozone Season Group 2 unit .

2. Allocations remaining after application of the maximum historic emission cap are reapportioned on the same basis to New TR NOx Ozone Season units whose historic heat input based allocation does not exceed its maximum historic emission cap, if applicable. These steps are repeated until the entire Retired Unit Allowance Pool is allocated or until all new units receive allocations equal to its maximum historic emission cap. The resulting TR NOx Ozone Season Group 2 allocation value is rounded to the nearest whole ton.

(g) Adjustment of Baseline NOx Allowance Allocations. If TR NOx Ozone Season Group 2 allowances remain in the Retired Unit Allowance Pool after allocations are made to all New TR NOx Ozone Season units in accordance with subparagraph (f) of this paragraph, or if the TR NOx Ozone Season Group 2 allowances from the Indian Country New Unit Allowance Pool become available for allocation by the Department in accordance with subparagraph (c)3 of this paragraph, these NOx allowances will be allocated on a pro rata basis to the Baseline TR NOx Ozone Season units where historic heat input based allocation does not exceed its maximum historic emission cap, for the applicable control periods.

(h) NOx allowances allocated to Baseline TR NOx Ozone Season units based on heat inputs determined in accordance with subparagraph (b)1.(ii) or (b)2.(ii) of this paragraph will be held in the State's general account until the unit commences operation, prior to or during the control period for which NOx allowances were allocated. If the unit does not commence operations, the NOx allowances will be transferred by the Department pro rata to Baseline TR NOx Ozone Season units that were allocated NOx allowances in accordance with subparagraph (b)1.(i) or (b)2.(i) of this paragraph, and whose historic heat input based allocation does not exceed its maximum historic emission cap if applicable. By January 30 of the following year, the Department shall notify the Administrator of the appropriate NOx allowance transfers.

1. NOx allowances allocated to New TR NOx Ozone Season units based on heat inputs determined in accordance with subparagraphs (b)1.(iii), (b)2.(iv), (b)3.(iii), or (b)4.(iii) of this paragraph will be held in the State's general account until the unit commences operation, prior to or during the control period for which NOx allowances were allocated. If the unit does not commence

operations, the NOx allowances will be transferred by the Department pro rata to Baseline TR NOx Ozone Season units that were allocated NOx allowances in accordance with subparagraphs (b)1.(i) and (ii), (b)2.(i) and (ii), (b)3.(i), or (b)4.(i) of this paragraph, and whose historic heat input based allocation does not exceed its maximum historic emission cap if applicable. By January 30 of the following year, the Department shall notify the Administrator of the appropriate NOx allowance transfers.

2. NOx allowances will not be allocated to TR NOx Ozone Season Group 2 units that retire under 335-3-8-.41 prior to the date NOx allowance allocations are submitted to the Administrator under subparagraphs (2)(a), (b), (c), or (d) of this rule.

3. The total TR NOx Ozone Season Group 2 allowances allocated for any control period in accordance with subparagraphs (3)(f), and (g) of this paragraph shall not exceed the State Ozone Season Group 2 Trading Program Budget as determined by the applicable, approved State Implementation Plan.

(i) Distribution of remaining TR NOx Ozone Season Group 2 Allowances. If any TR NOx Ozone Season Group 2 allowances remain after allocations are completed in subparagraphs (e) through (h) of this paragraph, the remaining allowances shall be distributed proportional to the allocations made in subparagraphs (e) through (h) of this paragraph beyond the unit's historical emissions cap. However, no unit may receive additional allocations that exceed any enforcement cap or permit limitation.

(j) Units Incorrectly Allocated TR NOx Ozone Season Group 2 Allowances. The procedures for addressing units that were incorrectly allocated TR NOx Ozone Season Group 2 allowances are incorporated by reference as they exist in 40 CFR §97.811(c), Subpart EEEEE as of October 26, 2016 (81 FR 74504) except for the provisions found in 40 CFR §§97.811(c)(5)(iii). (The materials incorporated by reference are available for purchase and inspection at the Department's offices.)

Author: Ronald W. Gore.
Statutory Authority: Code of Alabama 1975, §§22-28-10, 22-28-11, 22-28-14, 22-28-18, 22-28-20, 22-28-22, 22-22A-5, 22-22A-6, and 22-22A-8.
History: Effective Date: November 24, 2015. **Amended:** Effective: June 2, 2017. **Amended:** Filed: October 23, 2018; Effective: December 7, 2018.

335-3-8-.47 Reserved.

335-3-8-.48 Authorization of Designated Representative and Alternate Designated Representative.

(1) General. The Environmental Protection Agency Regulations governing the authorization of Designated Representative and Alternate Designated Representative for TR NOX Ozone Season Group 2 Sources, are incorporated by reference as they exist in 40 CFR §97.813, Subpart EEEEE as of October 26,

2016 (81 FR 74504). (The materials incorporated by reference are available for purchase and inspection at the Department's offices.)

Author: Ronald W. Gore.
Statutory Authority: Code of Alabama 1975, §§22-28-10, 22-28-11, 22-28-14, 22-28-18, 22-28-20, 22-28-22, 22-22A-5, 22-22A-6, and 22-22A-8.
History: Effective Date: November 24, 2015; June 2, 2017.

335-3-8-.49 Responsibilities of Designated Representative and Alternate Designated Representative.

(1) General. The Environmental Protection Agency Regulations governing the Responsibilities of Designated Representative and Alternate Designated Representative for TR NOX Ozone Season Group 2 Sources, are incorporated by reference as they exist in 40 CFR §97.814, Subpart EEEEE as of October 26, 2016 (81 FR 74504). (The materials incorporated by reference are available for purchase and inspection at the Department's offices.)

Author: Ronald W. Gore.
Statutory Authority: Code of Alabama 1975, §§22-28-10, 22-28-11, 22-28-14, 22-28-18, 22-28-20, 22-28-22, 22-22A-5, 22-22A-6, and 22-22A-8.
History: Effective Date: November 24, 2015; June 2, 2017.

335-3-8-.50 Changing Designated Representative and Alternate Designated Representative; Changes in Owners and Operators; Changes in Units at the Source.

(1) General. The Environmental Protection Agency Regulations governing Changing Designated Representative and Alternate Designated Representative; Changes in Owners and Operators; Changes in Units at the Source for TR NOX Ozone Season Group 2 Sources, are incorporated by reference as they exist in 40 CFR §97.815, Subpart EEEEE as of October 26, 2016 (81 FR 74504). (The materials incorporated by reference are available for purchase and inspection at the Department's offices.)

Author: Ronald W. Gore.
Statutory Authority: Code of Alabama 1975, §§22-28-10, 22-28-11, 22-28-14, 22-28-18, 22-28-20, 22-28-22, 22-22A-5, 22-22A-6, and 22-22A-8.
History: Effective Date: November 25, 2015; June 2, 2017.

335-3-8-.51 Certificate of Representation.

(1) General. The Environmental Protection Agency Regulations governing Certificate of Representation for TR NOX Ozone Season Group 2 Sources, are incorporated by reference as they exist in 40 CFR §97.816, Subpart EEEEE as of October 26, 2016 (81 FR 74504). (The materials incorporated by reference are available for purchase and inspection at the Department's offices.)

Author: Ronald W. Gore.
Statutory Authority: Code of Alabama 1975, §§22-28-10, 22-28-11, 22-28-14, 22-28-18, 22-28-20, 22-28-22, 22-22A-5, 22-22A-6, and 22-22A-8.
History: Effective Date: November 24, 2015; June 2, 2017.

335-3-8-.52 Objections Concerning Designated Representative and Alternate Designated Representative.

(1) General. The Environmental Protection Agency Regulations governing Objections Concerning Designated Representative and Alternate Designated Representative, are incorporated by reference as they exist in 40 CFR §97.817, Subpart EEEEE as of October 26, 2016 (81 FR 74504). (The materials incorporated by reference are available for purchase and inspection at the Department's offices.)

(2) Word, Phrase, and Rule Substitutions. For the purpose of rule 335- 3-8-.52 substitute:

(a) Only in 40 CFR §97.817(c) substitute "Neither the Administrator nor the Department shall" for "The Administrator will not."

Author: Ronald W. Gore.
Statutory Authority: Code of Alabama 1975, §§22-28-10, 22-28-11, 22-28-14, 22-28-18, 22-28-20, 22-28-22, 22-22A-5, 22-22A-6, and 22-22A-8.
History: Effective Date: November 24, 2015; June 2, 2017.

335-3-8-.53 Delegation by Designated Representative and Alternate Designated Representative.

(1) General. The Environmental Protection Agency Regulations governing Delegation by Designated Representative and Alternate Designated Representative, are incorporated by reference as they exist in 40 CFR §97.818, Subpart EEEEE as of October 26, 2016 (81 FR 74504). (The materials incorporated by reference are available for purchase and inspection at the Department's offices.)

Author: Ronald W. Gore.
Statutory Authority: Code of Alabama 1975, §§22-28-10, 22-28-11, 22-28-14, 22-28-18, 22-28-20, 22-28-22, 22-22A-5, 22-22A-6, and 22-22A-8.
History: Effective Date: November 24, 2015; June 2, 2017.

335-3-8-.54 Reserved

335-3-8-.55 Establishment of Compliance Accounts, Assurance Accounts, and General Accounts.

(1) General. The Environmental Protection Agency Regulations governing Establishment of Compliance Accounts, Assurance Accounts, and General Accounts, are incorporated by reference as they exist in 40 CFR §97.820, Subpart EEEEE as of October 26, 2016 (81 FR 74504). (The materials incorporated by reference are available for purchase and inspection at the Department's offices.)

(2) Word, Phrase, and Rule Substitutions. For the purpose of rule 335- 3-8-.55 substitute:

(a) Only in 40 CFR §97.820(c)(4)(iii) substitute "Neither the Administrator nor the Department shall" for "The Administrator will not."

Author: Ronald W. Gore.
Statutory Authority: Code of Alabama 1975, §§22-28-10, 22-28-11, 22-28-14, 22-28-18, 22-28-20, 22-28-22, 22-22A-5, 22-22A-6, and 22-22A-8.
History: Effective Date: November 24, 2015; June 2, 2017.

335-3-8-.56 Recordation of TR NOx Ozone Season Group 2 Allowance Allocations and Auction Results.

(1) General. The Environmental Protection Agency Regulations governing Recordation of TR NOX Ozone Season Group 2 Allowance Allocations and Auction Results, are incorporated by reference as they exist in 40 CFR §97.821, Subpart EEEEE as of October 26, 2016 (81 FR 74504), except for the provisions found in 40 CFR §§97.821(a), (b), (h), (i), and (j). (The materials incorporated by reference are available for purchase and inspection at the Department's offices.)

Author: Ronald W. Gore.
Statutory Authority: Code of Alabama 1975, §§22-28-10, 22-28-11, 22-28-14, 22-28-18, 22-28-20, 22-28-22, 22-22A-5, 22-22A-6, and 22-22A-8.
History: Effective Date: November 24, 2015; June 2, 2017.

335-3-8-.57 Submission of TR NOx Ozone Season Group 2 Allowance Transfers.

(1) General. The Environmental Protection Agency Regulations governing Submission of TR NOX Ozone Season Group 2 Allowance Transfers, are incorporated by reference as they exist in 40 CFR §97.822, Subpart EEEEE as of October 26, 2016 (81 FR 74504). (The materials incorporated by reference are available for purchase and inspection at the Department's offices.)

Author: Ronald W. Gore.
Statutory Authority: Code of Alabama 1975, §§22-28-10, 22-28-11, 22-28-14, 22-28-18, 22-28-20, 22-28-22, 22-22A-5, 22-22A-6, and 22-22A-8.
History: Effective Date: November 24, 2015; June 2, 2017.

335-3-8-.58 Recordation of TR NOx Ozone Season Group 2 Allowance Transfers.

(1) General. The Environmental Protection Agency Regulations governing Recordation of TR NOX Ozone Season Group 2 Allowance Transfers, are incorporated by reference as they exist in 40 CFR §97.823, Subpart EEEEE as of October 26, 2016 (81 FR 74504). (The materials incorporated by reference are available for purchase and inspection at the Department's offices.)

Author: Ronald W. Gore.
Statutory Authority: Code of Alabama 1975, §§22-28-10, 22-28-11, 22-28-14, 22-28-18, 22-28-20, 22-28-22, 22-22A-5, 22-22A-6, and 22-22A-8.
History: Effective Date: November 24, 2015; June 2, 2017.

335-3-8-.59 Compliance with TR NOx Ozone Season Group 2 Emissions Limitation.

(1) General. The Environmental Protection Agency Regulations governing Compliance with TR NOX Ozone Season Group 2 Emissions Limitation, are incorporated by reference as they exist in 40 CFR §97.824, Subpart EEEEE as of October 26, 2016 (81 FR 74504). (The materials incorporated by reference are available for purchase and inspection at the Department's offices.)

Author: Ronald W. Gore.
Statutory Authority: Code of Alabama 1975, §§22-28-10, 22-28-11, 22-28-14,22-28-18, 22-28-20, 22-28-22, 22-22A-5, 22-22A-6, and 22-22A-8.
History: Effective Date: November 24, 2015; June 2, 2017.

335-3-8-.60 Compliance with TR NOx Ozone Season Group 2 Assurance Provisions.

(1) General. The Environmental Protection Agency Regulations governing Compliance with TR NOX Ozone Season Group 2 Assurance Provisions, are incorporated by reference as they exist in 40 CFR §97.825, Subpart EEEEE as of October 26, 2016 (81 FR 74504). (The materials incorporated by reference are available for purchase and inspection at the Department's offices.)

Author: Ronald W. Gore.
Statutory Authority: Code of Alabama 1975, §§22-28-10, 22-28-11, 22-28-14, 22-28-18, 22-28-20, 22-28-22, 22-22A-5, 22-22A-6, and 22-22A-8.
History: Effective Date: November 24, 2015; June 2, 2017.

335-3-8-.61 Banking.

(1) General. The Environmental Protection Agency Regulations governing Banking for TR NOX Ozone Season Group 2 Allowance, are incorporated by reference as they exist in 40 CFR §97.826, Subpart EEEEE as of October 26,

2016 (81 FR 74504). (The materials incorporated by reference are available for purchase and inspection at the Department's offices.)

(2) Word, Phrase, and Rule Substitutions. For the purpose of rule 335- 3-8-.61 substitute:

(a) Adem Administrative Code r. 335-3-8-.46(3)(i) for 40 CFR §97.811(c).

Author: Ronald W. Gore.
Statutory Authority: Code of Alabama 1975, §§22-28-10, 22-28-11, 22-28-14, 22-28-18, 22-28-20, 22-28-22, 22-22A-5, 22-22A-6, and 22-22A-8.
History: Effective Date: November 24, 2015; June 2, 2017.

335-3-8-.62 TR NOx Ozone Season Group 2 Trading Program – Account Error.

(1) General. The Environmental Protection Agency Regulations governing Account Error, are incorporated by reference as they exist in 40 CFR §97.827, Subpart EEEEE as of October 26, 2016 (81 FR 74504). (The materials incorporated by reference are available for purchase and inspection at the Department's offices.)

Author: Ronald W. Gore.
Statutory **Author**ity: Code of Alabama 1975, §§22-28-10, 22-28-11, 22-28-14, 22-28-18, 22-28-20, 22-28-22, 22-22A-5, 22-22A-6, and 22-22A-8.
History: Effective Date: November 24, 2015; June 2, 2017.

335-3-8-.63 TR NOx Ozone Season Group 2 Trading Program – Administrator's Action on Submissions.

(1) General. The Environmental Protection Agency Regulations governing Administrator's Action on Submissions, are incorporated by reference as they exist in 40 CFR §97.828, Subpart EEEEE as of October 26, 2016 (81 FR 74504). (The materials incorporated by reference are available for purchase and inspection at the Department's offices.)

Author: Ronald W. Gore.
Statutory Authority: Code of Alabama 1975, §§22-28-10, 22-28-11, 22-28-14, 22-28-18, 22-28-20, 22-28-22, 22-22A-5, 22-22A-6, and 22-22A-8.
History: Effective Date: November 24, 2015; June 2, 2017.

335-3-8-.64 Reserved.

335-3-8-.65 General Monitoring, Recordkeeping, and Reporting Requirements.

(1) General. The Environmental Protection Agency Regulations governing General Monitoring, Recordkeeping, and Reporting Requirements, are incorporated by reference as they exist in 40 CFR §97.830, Subpart EEEEE as of October 26, 2016 (81 FR 74504). (The materials incorporated by reference are available for purchase and inspection at the Department's offices.)

(2) Word, Phrase, and Rule Substitutions. For the purpose of rule 335- 3-8-.65 substitute:

(a) Adem Administrative Code r. 335-3-8-.41 for 40 CFR §97.805.

Author: Ronald W. Gore.
Statutory Authority: Code of Alabama 1975, §§22-28-10, 22-28-11, 22-28-14, 22-28-18, 22-28-20, 22-28-22, 22-22A-5, 22-22A-6, and 22-22A-8.
History: Effective Date: November 24, 2015; June 2, 2017.

335-3-8-.66 Initial Monitoring System Certification and Recertification Procedures.

(1) General. The Environmental Protection Agency Regulations governing Initial Monitoring System Certification and Recertification Procedures, are incorporated by reference as they exist in 40 CFR §97.831, Subpart EEEEE as of October 26, 2016 (81 FR 74504). (The materials incorporated by reference are available for purchase and inspection at the Department's offices.)

(2) Word, Phrase, and Rule Substitutions. For the purpose of rule 335-3- 8-.66 substitute:

(a) In §97.831(d)(3)(i) insert ", the Department" after "Office."

Author: Ronald W. Gore.
Statutory Authority: Code of Alabama 1975, §§22-28-10, 22-28-11, 22-28-14, 22-28-18, 22-28-20, 22-28-22, 22-22A-5, 22-22A-6, and 22-22A-8.
History: Effective Date: November 24, 2015; June 2, 2017.

335-3-8-.67 Monitoring System Out-of-Control Periods.

(1) General. The Environmental Protection Agency Regulations governing Monitoring System Out-of-Control Periods, are incorporated by reference as they exist in 40 CFR §97.832, Subpart EEEEE as of October 26, 2016 (81 FR 74504). (The materials incorporated by reference are available for purchase and inspection at the Department's offices.)

Author: Ronald W. Gore.
Statutory Authority: Code of Alabama 1975, §§22-28-10, 22-28-11, 22-28-14, 22-28-18, 22-28-20, 22-28-22, 22-22A-5, 22-22A-6, and 22-22A-8.
History: Effective Date: November 24, 2015; June 2, 2017.

335-3-8-.68 Notifications Concerning Monitoring.

(1) General. The Environmental Protection Agency Regulations governing Notifications Concerning Monitoring, are incorporated by reference as they exist in 40 CFR §97.833, Subpart EEEEE as of October 26, 2016 (81 FR 74504). (The materials incorporated by reference are available for purchase and inspection at the Department's offices.)

Author: Ronald W. Gore.
Statutory Authority: Code of Alabama 1975, §§22-28-10, 22-28-11, 22-28-14, 22-28-18, 22-28-20, 22-28-22, 22-22A-5, 22-22A-6, and 22-22A-8.
History: Effective Date: November 24, 2015; June 2, 2017.

335-3-8-.69 Recordkeeping and Reporting.

(1) General. The Environmental Protection Agency Regulations governing Recordkeeping and Reporting, are incorporated by reference as they exist in 40 CFR §97.834, Subpart EEEEE as of October 26, 2016 (81 FR 74504). (The materials incorporated by reference are available for purchase and inspection at the Department's offices.)

Author: Ronald W. Gore.
Statutory Authority: Code of Alabama 1975, §§22-28-10, 22-28-11, 22-28-14, 22-28-18, 22-28-20, 22-28-22, 22-22A-5, 22-22A-6, and 22-22A-8.
History: Effective Date: November 24, 2015; June 2, 2017.

335-3-8-.70 Petitions for Alternatives to Monitoring, Recordkeeping, or Reporting Requirements.

(1) General. The Environmental Protection Agency Regulations governing Petitions for Alternatives to Monitoring, Recordkeeping, or Reporting Requirements, are incorporated by reference as they exist in 40 CFR §97.835, Subpart EEEEE as of October 26, 2016 (81 FR 74504). (The materials incorporated by reference are available for purchase and inspection at the Department's offices.)

Author: Ronald W. Gore.
Statutory Authority: Code of Alabama 1975, §§22-28-10, 22-28-11, 22-28-14, 22-28-18, 22-28-20, 22-28-22, 22-22A-5, 22-22A-6, and 22-22A-8.
History: Effective Date: November 24, 2015; June 2, 2017.

335-3-8-.71 NOx Budget Program. [New Rule]

(1) Purpose. The following rule establishes general provisions and the applicability, monitoring and reporting provisions for the NO_X Budget Program for Alabama's State Implementation Plan as a means of mitigating the interstate

transport of ozone and nitrogen oxides pursuant to 40 CFR, § 51.121 and 51.122.

(2) Definitions. For the purpose of this rule and rule 335-3-8-.72, the following definitions will apply:

(a) "Account Certificate of Representation" means the completed and signed designation of a NO_X Authorized Account Representative for a NO_X Budget source or a group of identified NO_X Budget sources who is authorized to represent the owners and operators of such source or sources and of the NO_X Budget units at such source or sources with regard to matters under the NO_X Budget Program. A complete account certificate of representation shall include:

1. Identification of the NO_X Budget source and each NO_X Budget unit at the source for which the account certificate of representation is submitted.

2. The name, address, e-mail address, and telephone number of the NO_X authorized account representative and any alternate NO_X authorized account representative.

3. A list of the owners and operators of the NO_X Budget source and of each NO_X Budget unit at the source.

4. The following certification statement by the NO_X authorized account representative and any alternate NO_X authorized account representative: "I certify that I was selected as the NO_X authorized account representative or alternate NO_X authorized account representative, as applicable, by an agreement binding on the owners and operators of the NO_X Budget source and each NO_X Budget unit at the source. I certify that I have all the necessary authority to carry out my duties and responsibilities under the NO_X Budget Program on behalf of the owners and operators of the NO_X Budget source and of each NO_X Budget unit at the source and that each such owner and operator shall be fully bound by my representations, actions, inactions, or submissions and by any decision or order issued to me by the Department, the Administrator, or a court regarding the source or unit."

5. The signature of the NO_X authorized account representative and any alternate NO_X authorized account representative and the dates signed.

(b) "Administrator" means the Administrator of the United States Environmental Protection Agency or the Administrator's duly authorized representative.

(c) "Boiler" means an enclosed fossil or other fuel-fired combustion device used to produce heat and to transfer heat to recirculating water, steam, or other medium.

(d) "CAA" means the CAA, 42 U.S.C. 7401, et seq., as amended by Pub. L. No. 101-549 (November 15, 1990).

(e) "Cogeneration Combined Cycle System" means a combined cycle system that has equipment used to produce electricity and forms of useful thermal energy (such as heat or steam) for industrial, commercial, heating, or cooling purposes through the sequential use of energy.

(f) "Combined Cycle System" means a system comprised of one or more combustion turbines, heat recovery steam generators, and steam turbines configured to improve overall efficiency of electricity generation or steam production.

(g) "Combustion Turbine" means an enclosed fossil or other fuel-fired device that is comprised of a compressor, a combustor, and a turbine, and in which the flue gas resulting from the combustion of fuel in the combustor passes through the turbine, rotating the turbine.

(h) "Commence Operation" means to have begun any mechanical, chemical, or electronic process, including, with regard to a unit, start-up of a unit's combustion chamber. Except as provided in paragraph (5) of this rule, for a unit that is a NO_X Budget unit under paragraph (4) of this rule on the date of commencement of operation, such date shall remain the unit's date of commencement of operation even if the unit is subsequently modified, reconstructed, or repowered. Except as provided in paragraph (5) of this rule for a unit that is not a NO_X Budget unit under paragraph (4) of this rule on the date of commencement of operation, the date the unit becomes a NO_X Budget unit under paragraph (4) of this rule shall be the unit's date of commencement of operation.

(i) "Compliance Certification" means a submission to the Department or the Administrator, as appropriate, that is required under rule 335-3-8-.72 to report a NO_X Budget source's or a NO_X Budget unit's compliance or noncompliance with this rule and that is signed by the NO_X authorized account representative in accordance with this rule.

(j) "Continuous Emission Monitoring System or CEMS" means the equipment required to sample, analyze, measure, and provide, by readings taken at least once every 15 minutes of the measured parameters, a permanent

record of nitrogen oxides emissions, expressed in tons per hour for nitrogen oxides. A CEMS may include any or all of the following components:

1. Flow monitor;

2. Nitrogen oxides pollutant concentration monitors;

3. Diluent gas monitor (oxygen or carbon dioxide) when such monitoring is required;

4. A continuous moisture monitor when such monitoring is required; or

5. An automated data acquisition and handling system.

(k) "Control Period" means the period of ozone season, beginning May 1 of a year and ending on September 30 of the same year, inclusive.

(l) "Department" means the Alabama Department of Environmental Management.

(m) "Emissions" means air pollutants exhausted from a unit or source into the atmosphere, as measured, recorded, and reported to the Department.

(n) "Fossil Fuel" means natural gas, petroleum, coal, or any form of solid, liquid, or gaseous fuel derived from such material.

(o) "Fossil fuel-fired" with regard to a unit, means:

1. The combustion of fossil fuel, alone or in combination with any other fuel, where fossil fuel actually combusted comprises more than 50 percent of the annual heat input on a Btu basis during any year starting in 1995 or, if a unit had no heat input starting in 1995, during the last year of operation of the unit prior to 1995; or

2. The combustion of fossil fuel, alone or in combination with any other fuel, where fossil fuel is projected to comprise more than 50 percent of the annual heat input on a Btu basis during any year; provided that the unit shall be "fossil fuel-fired'' as of the date, during such year, on which the unit begins combusting fossil fuel.

(p) "Generator" means a device that produces electricity.

(q) "Heat Input" means the product (in mmBtu/time) of the gross calorific value of the fuel (in Btu/lb) and the fuel feed rate into a combustion device (in mass of fuel/time), and does not include the heat derived from preheated combustion air, recirculated flue gases, or exhaust from other sources.

(r) "Maximum Design Heat Input" means the ability of a unit to combust a stated maximum amount of fuel per hour on a steady state basis, as determined by the physical design and physical characteristics of the unit.

(s) "Monitoring System" means any monitoring system that meets the requirements of rule 335-3-8-.72.

(t) "Nameplate Capacity" means, starting from the initial installation of a generator, the maximum electrical generating output (in MWe) that the generator is capable of producing on a steady state basis and during continuous operation (when not restricted by seasonal or other deratings) as of such installation as specified by the manufacturer of the generator or, starting from the completion of any subsequent physical change in the generator resulting in an increase in the maximum electrical generating output (in MWe) that the generator is capable of producing on a steady state basis and during continuous operation (when not restricted by seasonal or other deratings), such increased maximum amount as of such completion as specified by the person conducting the physical change.

(u) "NO_X Authorized Account Representative" means, for a NO_X budget source or NO_X budget unit at the source, a responsible person or official who is authorized by the owner and operator of the source and all NO_X budget units at the source to represent and legally bind each owner and operator in matters pertaining to the NO_X Budget Program. The NO_X Authorized Account Representative shall be the responsible official as defined under this rule and the NO_X Authorized Account Representative shall act as the designated representative for any sources that continue to monitor and report NO_X mass emissions under 40 CFR 75.

(v) "NO_X Budget Source" means a source that includes one or more NO_X Budget units.

(w) "NO_X Budget Unit" means a unit that is subject to the NO_X Budget Program emissions limitations under paragraph (4) of this rule.

(x) "Operator" means any person who operates, controls, or supervises a NO_X Budget unit or a NO_X Budget source and shall include, but not be limited to, any holding company, utility system, or plant manager of such a unit or source.

(y) "Owner" means any of the following persons:

1. Any holder of any portion of the legal or equitable title in a NO_X Budget unit; or

2. Any holder of a leasehold interest in a NO_X Budget unit.

(z) "Ozone Season" means, for the purpose of this rule, as well as rule 335-3-8-.72, the period of time beginning May 1 of a year and ending on September 30 of the same year, inclusive.

(aa) "Receive or Receipt of" means, when referring to the Department or the Administrator, to come into possession of a document, information, or correspondence (whether sent in writing or by authorized electronic transmission), as indicated in an official correspondence log, or by a notation made on the document, information, or correspondence, by the Department or the Administrator in the regular course of business.

(bb) "Reference Method" means any direct test method of sampling and analyzing for an air pollutant or diluent as specified in 40 CFR 60, Appendix A [incorporated by reference in ADEM Admin. Code r. 335-3-10-.03(1)].

(cc) "Responsible Official" means one of the following:

1. For a corporation: a president, secretary, treasurer, or vice-president of the corporation in charge of a principal business function, or any other person who performs similar policy or decision-making functions for the corporation, or a duly authorized representative of such person if the representative is responsible for the overall operation of one or more manufacturing, production, or operating facilities applying for or subject to a permit and either:

(i) The facilities employ more than 250 persons or have gross annual sales or expenditures exceeding $25 million (in second quarter 1980 dollars); or

(ii) The delegation of authority to such representatives is approved in advance by the Department;

2. For a partnership or sole proprietorship: a general partner or the proprietor, respectively;

3. For a municipality, State, Federal, or other public agency: Either a principal executive officer or ranking elected official. For the purposes of this chapter, a principal executive officer of a Federal agency includes the chief executive officer having responsibility for the overall operations of a principal geographic unit of the agency (e.g., a Regional Administrator of EPA).

(dd) "Source" means any governmental, institutional, commercial, or industrial structure, installation, plant, building, or facility that emits or has the potential to emit any regulated air pollutant under the CAA. For purposes of paragraph 502(c) of the CAA, a "source", including a "source" with multiple units, shall be considered a single "facility".

(ee) "State" means the State of Alabama, the Environmental Management Commission, and the Commission's representatives.

(ff) "State of Alabama NO_X Budget" means the total number of tons of NO_X apportioned to all NO_X Budget units in the State, in accordance with the NO_X Budget Program, for use in a given control period.

(gg) "Submit or Serve" means to send or transmit a document, information, or correspondence to the person specified in accordance with the applicable regulation in person, by United States Postal Service, or by other means of dispatch or transmission and delivery. Compliance with any "submission", "service", or "mailing" deadline shall be determined by the date of dispatch, transmission, or mailing and not the date of receipt.

(hh) "Ton or Tonnage" means any "short ton" (i.e., 2,000 pounds). For the purpose of reporting ozone season NO_X emissions from NO_X Budget sources, total tons for a control period shall be calculated in accordance with 335-3-8-.72, with any remaining fraction of a ton equal to or greater than 0.50 ton deemed to equal one ton and any fraction of a ton less than 0.50 ton deemed to equal zero tons.

(ii) "Unit" means a fossil fuel-fired stationary boiler, combustion turbine, combined cycle system, or cogeneration combined cycle system.

(3) Measurements, Abbreviations, and Acronyms. Measurements, abbreviations, and acronyms used in this rule and in rule 335-3-8-.72 are defined as follows:

(a) Btu - British thermal unit.

(b) hr - hour.

(c) lb - pounds.

(d) mmBtu - million Btu.

(e) mmscf - million standard cubic feet

(f) MWe - megawatt electrical.

(g) ppm_w - parts per million concentration, on a wet basis

(h) ton - 2000 pounds.

(i) NO_X - nitrogen oxides.

(4) Applicability.

(a) The following units in the counties of Autauga, Bibb, Blount, Calhoun, Chambers, Cherokee, Chilton, Clay, Cleburne, Colbert, Coosa, Cullman, Dallas, Dekalb, Elmore, Etowah, Fayette, Franklin, Greene, Hale, Jackson, Jefferson, Lamar, Lauderdale, Lawrence, Lee, Limestone, Macon, Madison, Marion, Marshall, Morgan, Perry, Pickens, Randolph, Russell, Shelby, St. Clair, Sumter, Talladega, Tallapoosa, Tuscaloosa, Walker, and Winston shall be NO_X Budget units, and any source that includes one or more such units shall be a NO_X Budget source, subject to the requirements of this rule:

1. Any fossil fuel fired unit with a maximum design heat input greater than 250 mmBtu/hr that either:

(i) does not serve a generator producing electricity for sale; or

(ii) both serves a generator producing electricity (whether or not for sale) and produces useful thermal energy (such as heat or steam for industrial, commercial, heating, or cooling purposes) shall be a NO_X Budget unit from the time it commences operation.

(5) The following units shall be exempt from the requirements of the NO_X Budget Program:

(a) Any unit subject to ADEM Admin. Code r. 335-3-8-.40 shall not be a NO_X Budget unit.

(b) Any NO_X Budget unit that is permanently retired shall be exempt from the NO_X Budget Program, except for the provisions of this paragraph.

1. The exemption under subparagraph (b) of this paragraph shall become effective the day on which the unit is permanently retired. Within 30 days of permanent retirement, the NO_X authorized account representative shall submit a statement to the Department. A copy of the statement shall be submitted to the EPA. The statement shall state (in a format prescribed by the Department) that the unit is permanently retired and will comply with the requirements of rule 335-3-8-.71(5). After receipt of the notice under this subparagraph, the Department will amend any permit covering the source at which the unit is located to add the provisions and requirements of the exemption under subparagraph (c) of this paragraph.

(c) Special provisions.

1. A unit exempt under this paragraph shall not emit any nitrogen oxides, starting on the date that the exemption takes effect.

2. The owners and operators and, to the extent applicable, the NO_X authorized account representative of a unit exempt under this paragraph shall comply with the requirements of the NO_X Budget Program concerning all periods for which the exemption is not in effect, even if such requirements arise, or must be complied with, after the exemption takes effect.

3. For a period of 5 years from the date the records are created, the owners and operators of a unit exempt under this paragraph shall retain at the source that includes the unit, records demonstrating that the unit is permanently retired. The 5-year period for keeping records may be extended for cause, at any time prior to the end of the period, in writing by the Department or the Administrator. The owners and operators bear the burden of proof that the unit is permanently retired.

4. Loss of exemption.

(i) A unit exempt under subparagraph (b) of this paragraph shall lose its exemption the date on which the unit resumes operation.

(ii) For the purpose of applying monitoring requirements under ADEM Admin. Code r. 335-3-8-.72, a unit that loses its exemption under this section shall be treated as a unit that commences operation on the first date on which the unit resumes operation.

(6) Standard Requirements.

(a) State of Alabama NO_X Budget.

1. The NO_X Budget for NO_X Budget units, which applies to units only in the counties listed at subparagraph (4)a of this rule, inthe state of Alabama is 2,328 tons for each control period. The sum of the tons of NO_X emitted from all such units under paragraph (4) of this rule in each control period beginning after the effective date of this rule may not exceed this budget amount.

(i) Unless all NO_X Budget units under paragraph (4) of this rule are exempt by the first of May each year, the state shall conduct an annual review of actual NO_X emissions during the previous control period from all NO_X Budget units under paragraph (4) of this rule, including any new units, to ensure the total emissions remain below the state NO_X budget

(ii) By January 31 of each year, the state shall supply to EPA an annual review of the actual NOx emissions during the previous control period from all NO_X Budget units under paragraph (4) of this rule, in compliance with 40 CFR 51.122(c)(1)(i).

(iii) Should the total emissions for the control period exceed the state NO_X budget as defined in this paragraph, the State will, within one year of determining the exceedance of the State program budget, submit a revised State Implementation Plan to the EPA which compensates for the budget shortfall and ensures the state program budget is met in future years.

(b) Monitoring and reporting requirements.

1. The owners and operators and, to the extent applicable, the NO_X authorized account representative of each NO_X Budget source and each NO_X Budget unit at the source shall comply with the monitoring and reporting requirements of ADEM Admin. Code r. 335-3-8-.72 for any control period during which a NOx Budget Unit operates.

2. NO_X mass emissions measurements recorded and reported in accordance with ADEM Admin. Code r. 335-3-8-.72 shall be used to determine compliance with the State of Alabama NO_X Budget set forth in subparagraph (6)(a)1. of this paragraph.

(c) Recordkeeping requirements.

1. Unless otherwise provided, the owners and operators of the NO_X Budget source and each NO_X Budget unit at the source shall keep on site at the source each of the following documents for a period of 5 years from the date the document is created. This period may be extended for cause, at any time prior to the end of 5 years, in writing by the Department or the Administrator.

(i) The account certificate of representation for the NO_X authorized account representative for the source and each NO_X Budget unit at the source and all documents that demonstrate the truth of the statements in the account certificate of representation, in accordance with subparagraph (2)(a) of this rule; provided that the certificate and documents shall be retained on site at the source beyond such 5-year period until such documents are superseded because of the submission of a new account certificate of representation changing the NO_X authorized account representative.

(ii) All emissions monitoring information, in accordance with ADEM Admin Code r. 335-3-8-.72; provided that to the extent that rule 335-3-8-.72 provides for a 3-year period for recordkeeping, the 3-year period shall apply.

(iii) Copies of all reports, compliance certifications, and other submissions and all records made or required under the NO_X Budget Program.

(iv) Any other submission in order to demonstrate compliance with the requirements of the NO_X Budget Program.

2. The NO_X authorized account representative of a NO_X Budget source and each NO_X Budget unit at the source shall submit the reports and compliance certifications required under the NO_X Budget Program, including those under ADEM Admin Code r. 335-3-8-.72.

(d) Liability.

1. Any person who knowingly violates any requirement or prohibition of the NO_X Budget Program, or an exemption under paragraph (5) of this rule shall be subject to enforcement pursuant to applicable State or Federal law.

2. Any person who knowingly makes a false material statement in any record, submission, or report under the NO_X Budget Program shall be subject to criminal enforcement pursuant to the applicable State or Federal law.

3. No permit revision shall excuse any violation of the requirements of the NO_X Budget Program that occurs prior to the date that the revision takes effect.

4. Each NO_X Budget source and each NO_X Budget unit at the source shall meet the requirements of the NO_X Budget Program.

5. Any provision of the NO_X Budget Program that applies to a NO_X Budget source (including a provision applicable to the NO_X authorized account representative of a NO_X Budget source) shall also apply to the owners and operators of such source and of the NO_X Budget units at the source.

6. Any provision of the NO_X Budget Program that applies to a NO_X Budget unit (including a provision applicable to the NO_X authorized account representative of a NO_X budget unit) shall also apply to the owners and operators of such unit.

(e) Effect on other authorities. No provision of the NO_X Budget Program or an exemption under paragraph (5) of this rule shall be construed as exempting or excluding the owners and operators and, to the extent applicable, the NO_X authorized account representative of a NO_X Budget source or NO_X Budget unit from compliance with any other provision of the applicable, approved State Implementation Plan, an enforceable permit, or the CAA.

(7) Computation of time.

(a) Unless otherwise stated, any time period scheduled, under the NO_X Budget Program, to begin on the occurrence of an act or event shall begin on the day the act or event occurs.

(b) Unless otherwise stated, any time period scheduled, under the NO_X Budget Program, to begin before the occurrence of an act or event shall be computed so that the period ends the day before the act or event occurs.

(c) Unless otherwise stated, if the final day of any time period, under the NO_X Budget Program, falls on a weekend or a State or Federal holiday, the time period shall be extended to the next business day.

Author: Ronald W. Gore
Statutory Authority: Code of Alabama 1975, §§22-28-10, 22-28-11, 22-28-14, 22-28-18, 22-28-20, 22-28-22, 22-22A-5, 22-22A-6, and 22-22A-8.
History: Amended: Filed: February 28, 2020; Effective: April 13, 2020.

335-3-8-.72 NO_X Budget Program Monitoring and Reporting. [NEW RULE]

(1) Monitoring and reporting requirements. The owners and operators and, to the extent applicable, the NO_X authorized account representative of each NO_X Budget source and each NO_X Budget unit at the source shall implement a monitoring and reporting system necessary to attribute ozone season NO_X mass emissions to each NO_X Budget Unit at the source and provide a compliance certification report to be received by the Department by the 30th of November following each ozone season:

(a) A NO_X Budget Unit that is required by any regulation or permit, or elects to monitor and report NO_X mass emissions in accordance with 40 CFR Part 75 shall adhere to the monitoring and reporting requirements of 40 CFR Part 75 and the data from the Part 75 monitoring system shall be utilized by the Department.

1. For purposes of a source subject to the monitoring and reporting provisions of Part 75, the definitions in 40 CFR 72.2 shall apply, and the terms "affected unit", "designated representative", and "continuous emission monitoring system" (or "CEMS") in 40 CFR Part 75 shall be replaced by the terms "NO_X Budget unit", "NO_X authorized account representative", and "continuous emission monitoring system" (or "CEMS"), respectively, as defined in 335-3-8-.71(2).

(b) A NOx Budget Unit that elects to monitor and report NO_X mass emissions utilizing a continuous emissions rate monitoring system (CERMS) shall adhere to the QA/QC requirements of 40 CFR Part 60, Performance Specification 2 and 40 CFR Part 60 Appendix F for the NOx CEMS, 40 CFR Part 60, Performance Specification 3 for a O_2 or CO_2 CEMS, and 40 CFR Part 60, Performance Specification 6 for Stack Gas Flow CEMS. The data from the CEMS shall be utilized by the Department.

(c) A NO_X Budget Unit that is required by any regulation or permit, or elects to operate a NO_X CEMS and is not subject to subparagraph (1)(a) of this rule, shall comply with the applicable monitoring and reporting regulations and utilize the CEMS data in conjunction with one of the following methods:

1. NO_X budget sources utilizing this alternative monitoring option will calculate the NO_X mass emissions (tons) for each ozone season and report the total as part of the compliance certification report to the Department no later

than November 30th following that ozone season. The calculation for NO_X mass emissions shall be as follows:

$$M = (R)*(HI)/2000$$

Where M is the NO_X mass emissions (tons),
R is the NO_X emissions rate (lb/mmBtu)
HI is the heat input (mmBtu
.

(i) The NO_X emission rate would be calculated from CEMS measurements using Method 19 in Appendix A of 40 CFR Part 60. For multi-fuel fired units, a worst case F-factor may be utilized for the purpose of calculating the NOx emission rate;

(ii) The heat input shall be calculated by totaling the heating value of the fuels used multiplied by the amount of each respective fuel utilized. The heat input due to the firing of wood waste may be calculated from steam production, less the heat input from other fuels. The calculation method for determining wood waste heat input must be detailed in the monitoring protocol required under subparagraph (e) of this paragraph; and

(iii) Each CEMS monitor shall meet the requirements of 40 CFR Part 60 Appendix B, Performance Specifications 2 and Appendix F.

Or,

2. NO_X budget sources utilizing this alternative monitoring option will calculate the NO_X mass emissions (tons) for each ozone season and report the total as part of the compliance certification report to the Department no later than November 30th following that ozone season. The calculation for NO_X mass emissions shall be as follows:

$$M = 0.1194(R)*(Q)*t_{op},/2000$$

Where M is the NO_X mass emissions (tons),
R is the NO_X emissions concentration (ppm_w)
Q is the flow rate (mmscf/hr), and
t_{op} is the operating time (hr).

(i) The NO_X emission concentration shall be determined from CEMS measurements.

(ii) The flow rate shall be determined by:

(I) The average flow rate of the unit under normal operating conditions as demonstrated by previous 40 CFR Part 75 monitoring, or

(II) The flow rate of the unit as determined by 40 CFR Part 60, Appendix A, Methods 1-4.

(iii) Each CEMS monitor shall meet the requirements of 40 CFR Part 60 Appendix B, Performance Specifications 2 and Appendix F.

3. A stack test shall be performed at least once every five years to verify historical NOx concentration and flow rate factors used to compute NOx mass emissions.

(d) A NO_X Budget Unit that is not subject to subparagraph (1)(a), (1)(b) or 1(c) shall calculate the NO_X concentration for each ozone season and report the total as part of the compliance certification report to the Department no later than November 30th following that ozone season. The calculation for NO_X concentration shall be that of rule 335-3-8-.72(1)(c)2. with use of the following:

1. For sources which have previously operated CEMS subject to the requirements of 40 CFR Part 75:

(i) The average NO_X concentration of the unit under normal operating conditions as demonstrated by previous 40 CFR Part 75 monitoring,

(ii) The average flow rate of the unit under normal operating conditions as demonstrated by previous 40 CFR Part 75 monitoring,

(iii) If the unit operating parameters, such as fuel composition, change beyond normal conditions from that of the Part 75 monitoring, additional testing may be required to verify the NOX concentration and the flow rate, or to establish new NOx concentration and flow rate factors.

2. For units which do not have NOx concentration and flow ratefactors from Part 75 CEMS, initial testing utilizing 40 CFR Part 60, Appendix A, Methods 1-4 and 7 or 7e shall be performed, followed by at least two annual tests which shall be used to establish NOx concentration and flow rate factors. If the unit operating parameters, such as fuel composition, change beyond normal conditions during the initial testing, additional testing may be required to verify the NO_X concentration and the flow rate, or to establish new NOx concentration and flow rate factors, as approved by the Department.

3. Any source subject to the requirements of subparagraph (d) of this paragraph must include in the annual report required under subparagraph (2)(a) of this rule a statement of whether the unit operating parameters were within the historical parameters used to establish the appropriate NOx concentration and flow rate factors.

4. The monitoring protocol would be approved if the Department finds that the protocol is designed to provide all information necessary to accurately attribute NOx emissions to the unit, and would be sufficient to determine whether the sources are collectively in compliance with the State of Alabama NOx Budget.

(e) A monitoring protocol shall be submitted for review and approval by the Department for each NOx Budget Unit. Minimum information in the monitoring protocol would be the monitoring method in subparagraphs (a), (b), or (c) of this paragraph; the normal operating conditions of the unit, including fuel type and operating rate; and any unit specific NOx concentration factors and flow rate factors utilized to calculate emissions. Additional information such as multiple operating scenarios or missing data substitution methods should be included as relevant.

1. For units which commenced operation prior to May 1, 2020, the pre-existing monitoring requirements must be met until a monitoring protocol is approved by the Department.

2. For units which commence operation on or after May 1, 2020, a monitoring protocol must be approved by the Department prior to operation during the initial ozone season.

3. Whenever the monitoring is changed, the pre-existing monitoring requirements shall be met until a new monitoring protocol is approved by the Department.

(2) Annual Compliance Report and Certification.

(a) For each control period in which one or more NO_X Budget units at a source are subject to the NO_X Budget program, the NO_X authorized account representative of the source shall submit to the Department by November 30 of that year, a compliance certification report for each source covering all such units.

1. The NO_X authorized account representative shall include in the compliance certification report under subparagraph (a) of this paragraph identification of each NO_X Budget unit, all NO_X mass emissions produced by the given unit for the control period covered by the report, supporting documentation, and the following certifications:

(i) the NO_X authorized account representative shall certify, based on reasonable inquiry of those persons with primary responsibility for operating the source and the NO_X Budget units at the source in compliance with the NO_X Budget Program, whether each NO_X Budget unit for which the compliance certification is submitted was operated during the calendar year covered by the report in compliance with the requirements of the NO_X Budget Program

applicable to the unit, including whether the monitoring plan that governs the unit has been maintained to reflect the actual operation and monitoring of the unit, and contains all information necessary to attribute NO_X emissions to the unit, in accordance with rule 335-3-8-.72(1).

Author: Ronald W. Gore
Statutory Authority: Code of Alabama 1975, §§22-28-10, 22-28-11, 22-28-14, 22-28-18, 22-28-20, 22-28-22, 22-22A-5, 22-22A-6, and 22-22A-8.
History: Filed: February 28, 2020; Effective: April 13, 2020.

ALABAMA DEPARTMENT OF ENVIRONMENTAL MANAGEMENT
AIR DIVISION - AIR POLLUTION CONTROL PROGRAM

CHAPTER 335-3-9
CONTROL OF EMISSIONS FROM MOTOR VEHICLES

TABLE OF CONTENTS

335-3-9-.01 Visible Emission Restrictions for Motor Vehicles
335-3-9-.02 Ignition System and Engine Speed
335-3-9-.03 Crankcase Ventilation Systems
335-3-9-.04 Exhaust Emission Control Systems
335-3-9-.05 Evaporative Loss Control Systems
335-3-9-.06 Other Prohibited Acts
335-3-9-.07 Effective Date

335-3-9-.01 Visible Emission Restrictions for Motor Vehicles.

(1) No persons shall cause or permit the emission of visible air contaminants from gasoline-powered motor vehicles, operated upon any street, highway, or other public place, for longer than five (5) consecutive seconds.

(2) No person shall cause or permit the emission of visible air contaminants from diesel-powered motor vehicles and other movable sources of a shade or density greater than twenty percent (20%) opacity for longer than five (5) consecutive seconds.

(3) Uncombined Water. Where the presence of uncombined water is the only reason for failure of an emission to meet the requirements of this rule, this rule shall not apply.

Author: James W. Cooper and John E. Daniel.
Statutory Authority: Code of Alabama 1975, §§22-28-14, 22-22A-5, 22-22A-6, and 22-22A-8.
History: Effective Date: September 24, 1972.
Amended: November 21, 1996.

335-3-9-.02 Ignition System and Engine Speed. All 1968 and subsequent model year gasoline-powered motor vehicles shall be maintained so as to be in compliance with the following requirements:

(a) The number of revolutions per minute of an engine while operating at idle speed shall be in accordance with the specifications and determined under conditions published by the manufacturer, but in no case shall the idle speed be less than the minimum specified in such published specifications. Revolutions per minute shall be tested for accuracy and precision at reasonable intervals

(b) Ignition timing of an engine shall comply with the published specifications of the manufacturer as determined in accordance with procedures and conditions specified by the manufacturer.

(c) All cylinders shall be firing.

Author: James W. Cooper and John E. Daniel.
Statutory Authority: Code of Alabama 1975, §§22-28-14, 22-22A-5, 22-22A-6, and 22-22A-8.
History: Effective Date: September 24, 1972.
Amended: September 7, 2000.

335-3-9-.03 Crankcase Ventilation Systems. The positive crankcase ventilation system on all 1968 and subsequent model year gasoline-powered motor vehicles, except motorcycles and motor tricycles, and all 1969 and subsequent model year gasoline-powered motor vehicles, including motorcycles and motor tricycles, shall meet the following requirements:

(a) The plumbing and connections shall be properly connected as installed by the manufacturer and free of obstructions and leakage.

(b) There shall be a negative pressure (suction) at the inlet of the crankcase ventilation valve.

(c) The crankcase ventilation valve shall be freely operative so as to regulate the flow of gases through the system.

Author: James W. Cooper and John E. Daniel.
Statutory Authority: Code of Alabama 1975, §§22-28-14, 22-22A-5, 22-22A-6, and 22-22A-8.
History: Effective Date: September 24, 1972.
Amended: September 7, 2000.

335-3-9-.04 Exhaust Emission Control Systems.

(1) Air Injection System. Exhaust emission control air injection systems on those gasoline-powered motor vehicles so equipped by the manufacturer shall operate so that:

(a) The air delivery hoses, connections, and air distribution manifold shall be properly connected as installed by the manufacturer and free of obstructions and leakage.

(b) The air compressor drive belt tension shall be within manufacturer's specifications.

(c) There is a positive air flow from the air pump to the air delivery distribution manifold.

(d) The check valve prevents any reverse air flow from the air distribution manifold out through the check valve inlet.

(e) The anti-backfire valve, gulp-valve, air bypass valve, or other similar device with the same function permits the passage of air from the air pump to the exhaust manifold or manifolds, except when the carburetor throttle is closed rapidly from an open position as in deceleration.

(2) Engine Modification System. All vacuum control valves, vacuum lines, mechanical linkage, electrical circuits and switches peculiar to certain engine modification systems shall be properly connected as installed on all 1968 and subsequent model year gasoline-powered motor vehicles so equipped by the manufacturer.

(3) Other Exhaust Emission Control Systems. Any other exhaust emission control system, other than air injection or engine modification which is installed or incorporated in a motor vehicle in compliance with Federal motor vehicle pollution control regulations shall be maintained in good operable conditions as specified by the manufacturer and shall be used at all times that the motor vehicle is operated.

(4) The requirements of this rule shall apply to all gasoline-powered motor vehicles with the following exceptions:

(a) Vehicles of 1967 or earlier model year.

(b) Vehicles not equipped by the manufacturer with exhaust emission control injection systems.

(c) Motor vehicles with an engine displacement of less than 50 cubic inches (819.35 cubic centimeters).

Author: James W. Cooper and John E. Daniel.
Statutory Authority: Code of Alabama 1975, §§22-28-14, 22-22A-5, 22-22A-6, and 22-22A-8.
History: Effective Date: September 24, 1972.
Amended:

335-3-9-.05 Evaporative Loss Control Systems. The evaporative loss control systems or devices designed and installed on 1972 and subsequent model year gasoline-powered motor vehicles shall be maintained in an operable condition such that the system or device continues to reduce or prevent the emission to the atmosphere of the vapors of the hydrocarbon fuel contained in the fuel tank, carburetor and/or fuel pump of the motor vehicle.

Author: James W. Cooper and John E. Daniel.
Statutory Authority: Code of Alabama 1975, §§22-28-14, 22-22A-5, 22-22A-6, and 22-22A-8.
History: Effective Date: September 24, 1972.
Amended:

335-3-9-.06 Other Prohibited Acts. In addition to the other strictures contained in this chapter, no person shall cause, suffer, allow, or permit the removal, disconnection, and/or disabling of a positive crankcase ventilator, exhaust emission control system, or evaporative loss control system which has been installed on a motor vehicle; nor shall any person defeat the design purpose of any such motor vehicle pollution control device by installing therein or thereto any part or component which is not a comparable replacement part or component of the device. Provided that:

(a) The components or parts of emission control systems on motor vehicles may be disassembled or reassembled for the purpose of repair and maintenance in proper working order.

(b) Components and parts of emission control systems may be removed and replaced with like components and parts intended by the manufacturer for such replacement.

(c) The provisions of this rule shall not apply to salvage operations on wrecked motor vehicles when the engine is so damaged that it will not be used again for the purpose of powering a motor vehicle on a highway.

Author: James W. Cooper and John E. Daniel.
Statutory Authority: Code of Alabama 1975, §§22-28-14, 22-22A-5, 22-22A-6, and 22-22A-8.
History: Effective Date: September 24, 1972.
Amended: September 7, 2000.

335-3-9-.07 Effective Date. The provisions of this chapter shall become effective sixty (60) days from the date of its adoption and promulgation.

Author: James W. Cooper and John E. Daniel.
Statutory Authority: Code of Alabama 1975, §§22-28-14, 22-22A-5, 22-22A-6, and 22-22A-8.
History: Effective Date: September 14, 1972.
Amended:

ALABAMA DEPARTMENT OF ENVIRONMENTAL MANAGEMENT
AIR DIVISION - AIR POLLUTION CONTROL PROGRAM

CHAPTER 335-3-10
STANDARDS OF PERFORMANCE FOR NEW STATIONARY SOURCES

TABLE OF CONTENTS

335-3-10-.01 General
335-3-10-.02 Designated Standards of Performance
335-3-10-.03 Appendices to 40 CFR 60
335-3-10-.04 Word or Phrase Substitutions

335-3-10-.01 General.

(1) The Environmental Protection Agency Regulations, and the Appendices applicable thereto, governing Standards of Performance for New Stationary Sources (40 CFR 60 and Appendices) designated in rules 335-3-10-.02 and -.03 are incorporated by reference as they exist in 40 CFR 60 (July 1, 2019), as amended by the word or phrase substitutions given in rule 335-3-10-.04. References for specific documents containing the complete text of subject regulations are given in Appendix C to these Regulations. Authorities which are not delegable to the state are also listed in Appendix C.

[NOTE: The standards pertaining to the Consolidated Federal Air rule are located in chapter 335-3-11A.]

(a) The materials incorporated by reference are available for purchase and inspection at the Department's offices at 1400 Coliseum Boulevard, Montgomery, Alabama 36110.

(2) The emission standards in this chapter shall supercede the emission standards in chapters 335-3-3, -4, -5, -6, -7, and -8 if both of the following criteria are met:

(a) the source category is subject to the regulations in this chapter for the specific pollutants to which an emission standard under this chapter applies, and

(b) the emission standard under chapters 335-3-3, -4, -5, -6, -7, and -8 is more stringent than the emission standard in this chapter for the specific pollutants regulated.

(3) Definitions. For purposes of this chapter, the definitions listed in 40 CFR §60.2 will apply.

Author:
Statutory Authority: Code of Alabama 1975, §§22-28-14, 22-22A-5, 22-22A-6, 22-22A-8, and 41-22-9.
History: Effective: May 25, 1976. **Amended:** Effective: February 13, 1985. **Amended:** Effective: June 9, 1987. **Amended:** Effective: June 16, 1988. **Amended:** Effective: September 21, 1989. **Amended:** Effective: November 1, 1990. **Amended:** Effective: March 28, 1991. **Amended:** Effective: July 31, 1991. **Amended:** Effective: September 19, 1991. **Amended:** Effective: October 24, 1991. **Amended:** Effective: December 28, 1993. **Amended:** Effective: April 27, 1995. **Amended:** Effective: November 21, 1996. **Amended:** Effective: September 25, 1997. **Amended:** Effective: March 27, 1998. **Amended:** Effective: July 15, 1999. **Amended:** Effective: January 13, 2000. **Amended:** Effective: September 7, 2000. **Amended:** Effective: March 14, 2002. **Amended:** Effective: October 3, 2002. **Amended:** Effective: April 3, 2003. **Amended:** Effective: October 2, 2003. **Amended:** Effective: March 22, 2005. **Amended:** Effective: December 12, 2005. **Amended:** Effective: July 11, 2006. **Amended:** Effective: April 3, 2007. **Amended:** Effective: January 22, 2008. **Amended:** Effective: August 5, 2008. **Amended:** Effective: January 19, 2009. **Amended:** Effective: March 30, 2010. **Amended:** Effective: May 23, 2011. **Amended:** Effective: May 29, 2012. **Amended:** Effective: January 22, 2013. **Amended:** Effective: May 28, 2013. **Amended:** Effective: September 24, 2013. **Amended:** Effective: November 24, 2015. **Amended:** Effective: June 2, 2017. **Amended:** Filed: August 21, 2018; **Amended:** Effective: October 5, 2018. **Amended:** Filed: February 28, 2020; Effective: April 13, 2020.

335-3-10-.02 Designated Standards of Performance.

(1) Subpart A - General Provisions.

(2) Subpart D - Fossil Fuel-Fired Steam Generators for which construction is commenced after August 17, 1971.

(a) Subpart Da - Electric Utility Steam Generating Units for which construction is commenced after September 18, 1978.

(b) Subpart Db - Industrial-Commercial-Institutional Steam Generating Units.

(c) Subpart Dc - Small Industrial-Commercial-Institutional Steam Generating Units.

(3) Subpart E - Incinerators.

(a) Subpart Ea - Municipal Waste Combustors for which construction is commenced after December 20, 1989 and on or before September 20, 1994.

(b) Subpart Eb - Municipal Waste Combustors for which construction is commenced after September 20, 1994.

(c) Subpart Ec - Standards of Performance for Hospital/Medical/ Infectious Waste Incinerators for which construction is commenced after June

20, 1996.

(4) Subpart F - Portland Cement Plants.

(5) Subpart G - Nitric Acid Plants.

(a) Subpart Ga – Nitric Acid Plants for which Construction, Reconstruction, or Modification Commenced After October 14, 2011.

(6) Subpart H - Sulfuric Acid Plants.

(7) Subpart I - Hot Mix Asphalt Facilities.

(8) Subpart J - Petroleum Refineries.

(a) Subpart Ja – Petroleum Refineries for which Construction, Reconstruction, or Modification Commenced After May 14, 2007.

(9) Subpart K - Storage Vessels for Petroleum Liquids constructed after June 11, 1973 and prior to May 19, 1978.

(a) Subpart Ka - Storage Vessels for Petroleum Liquids constructed after May 18, 1978.

(b) Subpart Kb - Volatile Organic Liquid Storage Vessels (Including Petroleum Liquid Storage Vessels) for which Construction, Reconstruction, or Modification Commenced after July 12, 1984.

(10) Reserved.

(11) Reserved.

(12) Subpart L - Secondary Lead Smelters.

(13) Subpart M - Secondary Brass and Bronze Ingot Production Plants.

(14) Subpart N - Primary Emissions from Basic Oxygen Process Furnaces for which construction is commenced after June 11, 1973.

(a) Subpart Na - Standards of Performance for Secondary Emissions from Basic Oxygen Process Steelmaking Facilities for which construction is commenced after January 20, 1983.

(15) Subpart O - Sewage Treatment Plants.

(16) Subpart P - Primary Copper Smelters.

(17) Subpart Q - Primary Zinc Smelters.

(18) Subpart R - Primary Lead Smelters.

(19) Subpart S - Primary Aluminum Reduction Plants.

(20) Subpart T - Wet Process Phosphoric Acid Plants.

(21) Subpart U - Superphosphoric Acid Plants.

(22) Subpart V - Diammonium Phosphate Plants.

(23) Subpart W - Triple Superphosphate Plants.

(24) Subpart X - Granular Triple Superphosphate Storage Facilities.

(25) Subpart Y - Coal Preparation Plants.

(26) Subpart Z - Ferroalloy Production Facilities.

(27) Subpart AA - Steel Plants (Electric arc furnaces and dust-handling equipment).

(a) Subpart AAa - Steel Plants: Electric Arc Furnaces and Argon Oxygen-Decarburization Vessels.

(28) Subpart BB - Kraft Pulp Mills.

(a) Subpart BBa – Standards of Performance for Kraft Pulp Mill Affected Sources for Which Construction, Reconstruction, or Modification Commenced After May 23, 2013.

(29) Subpart CC - Standards of Performance for Glass Manufacturing Plants.

(30) Subpart DD - Grain Elevators.

(31) Subpart EE - Surface Coating of Metal Furniture.

(32) Subpart FF - Reserved.

(33) Subpart GG - Stationary Gas Turbines.

(34) Subpart HH - Lime Manufacturing Plants.

(35) Subpart II - Reserved.

(36) Subpart JJ - Reserved.

(37) Subpart KK - Lead-Acid Battery Manufacture.

(38) Subpart LL - Metallic Mineral Processing Plants.

(39) Subpart MM - Automobile and Light-Duty Truck Surface Coating Operations.

(40) Subpart NN - Phosphate Rock Plants.

(41) Subpart OO - Reserved.

(42) Subpart PP - Ammonium Sulfate Manufacturing.

(43) Subpart QQ - Graphic Arts Industry: Publication Rotogravure Printing.

(44) Subpart RR - Pressure Sensitive Tape and Label Surface Coating Industry.

(45) Subpart SS - Industrial Surface Coating - Large Appliances.

(46) Subpart TT - Metal Coil Surface Coating Operations.

(47) Subpart UU - Asphalt Processing and Asphalt Roofing Manufacture.

(48) Subpart VV - Equipment Leaks of VOC in the Synthetic Organic Chemical Manufacturing Industry for which Construction, Reconstruction, or Modification Commenced After January 5, 1981, and on or Before November 7, 2006.

(a) Subpart VVa – Equipment Leaks of VOC in the Synthetic Organic Chemicals Manufacturing Industry for which Construction, Reconstruction, or Modification Commenced After November 7, 2006.

(49) Subpart WW - Beverage Can Surface Coating Industry.

(50) Subpart XX - Bulk Gasoline Terminals.

(51) Subpart YY - Reserved.

(52) Subpart ZZ - Reserved.

(53) Subpart AAA - Reserved.

(54) Subpart BBB - Rubber Tire Manufacturing Industry.

(55) Subpart CCC - Reserved.

(56) Subpart DDD - Volatile Organic Compound (VOC) Emissions from the Polymer Manufacturing Industry.

(57) Subpart EEE - Reserved.

(58) Subpart FFF - Flexible Vinyl and Urethane Coating and Printing.

(59) Subpart GGG - Equipment Leaks of VOC in Petroleum Refineries for which Construction, Reconstruction, or Modification Commenced After January 4, 1983, and on or Before November 7, 2006.

(a) Subpart GGGa – Equipment Leaks of VOC in Petroleum Refineries for which Construction, Reconstruction, or Modification Commenced After November 7, 2006.

(60) Subpart HHH - Synthetic Fiber Production Facilities.

(61) Subpart III - VOC Emissions from SOCMI Air Oxidation Unit Processes.

(62) Subpart JJJ - Petroleum Dry Cleaners.

(63) Subpart KKK - Equipment Leaks of VOC from Onshore Natural Gas Processing Plants for which Construction, Reconstruction, or Modification Commenced After January 20, 1984, and on or Before August 23, 2011.

(64) Subpart LLL - Standards of Performance for Onshore Natural Gas Processing for which Construction, Reconstruction, or Modification Commenced After January 20, 1984, and on or Before August 23, 2011: SO_2 Emissions.

(65) Subpart MMM - Reserved.

(66) Subpart NNN - VOC Emissions from SOCMI Distillation Operations.

(67) Subpart OOO - Nonmetallic Mineral Processing Plants.

(68) Subpart PPP - Wool Fiberglass Insulation Manufacturing Plants.

(69) Subpart QQQ - VOC Emissions from Petroleum Refinery Wastewater Systems.

(70) Subpart RRR - Volatile Organic Compound (VOC) Emissions from the Synthetic Organic Chemical Manufacturing Industry Reactor Processes.

(71) Subpart SSS - Magnetic Tape Manufacturing Industry.

(72) Subpart TTT - Industrial Surface Coating; Plastic Parts for Business Machines.

(73) Subpart UUU - Calciners and Dryers in Mineral Industries.

(74) Subpart VVV - Polymeric Coating of Supporting Substrates.

(75) Subpart WWW - Municipal Waste Landfills.

(76) Subpart XXX - Municipal Solid Waste Landfills that commenced construction, reconstruction, or modification after July 17, 2014.

(77) Subpart YYY - Reserved.

(78) Subpart ZZZ - Reserved.

(79) Subpart AAAA – Small Municipal Waste Combustion Units for which construction is commenced after August 30, 1999 or for which modification or reconstruction is commenced After June 6, 2001.

(80) Subpart BBBB - Reserved.

(81) Subpart CCCC - Commercial and Industrial Solid Waste Incineration Units for which construction is commenced after June 4, 2010 or for which modification or reconstruction is commenced on or after August 7, 2013.

(82) Subpart DDDD – Reserved.

(83) Subpart EEEE – Reserved.

(84) Subpart FFFF – Reserved.

(85) Subpart GGGG – Reserved.

(86) Subpart HHHH – Reserved.

(87) Subpart IIII – Stationary Compression Ignition Internal Combustion Engines.

(88) Subpart JJJJ – Stationary Spark Ignition Internal Combustion Engines.

(89) Subpart KKKK – Stationary Combustion Turbines.

(90) Subpart LLLL – New Sewage Sludge Incineration Units.

(91) Subpart OOOO – Crude Oil and Natural Gas Production, Transmission and Distribution.

(91)(a) Subpart OOOOa – Crude Oil and Natural Gas Facilities for which construction, modification or reconstruction commenced after September 18, 2015.

(92) Subpart PPPP – Reserved.

(93) Subpart QQQQ – Reserved.

(94) Subpart RRRR – Reserved.

(95) Subpart SSSS – Reserved.

(96) Subpart TTTT – Greenhouse Gas Emissions from Electric Generating Units.

Author:
Statutory Authority: Code of Alabama 1975, §§22-28-14, 22-22A-5, 22-22A-6, 22-22A-8, and 41-22-9.

History: Effective Date: May 25, 1976. **Amended:** Effective: June 23, 1981; **Amended:** Effective: February 13, 1985; **Amended:** Effective: April 15, 1987; **Amended:** Effective: June 16, 1988; **Amended:** Effective: September 21, 1989; November 1, 1990; **Amended:** Effective: March 28, 1991; **Amended:** Effective: July 31, 1991; **Amended:** Effective: September 19, 1991; **Amended:** Effective: October 24, 1991; **Amended:** Effective: December 28, 1993; **Amended:** Effective: April 27, 1995; **Amended:** Effective: November 21, 1996; **Amended:** Effective: September 25, 1997; **Amended:** Effective: March 27, 1998; **Amended:** Effective: July 15, 1999; **Amended:** Effective: January 13, 2000; **Amended:** Effective: September 7, 2000; **Amended:** Effective: March 14, 2002; **Amended:** Effective: October 3, 2002; **Amended:** Effective: April 3, 2003; **Amended:** Effective: October 2, 2003; **Amended:** Effective: March 22, 2005; **Amended:** Effective: December 12, 2005; **Amended:** Effective: July 11, 2006; **Amended:** Effective: November 14, 2006; **Amended:** Effective: April 3, 2007; **Amended:** Effective: January 22, 2008; **Amended:** Effective: August 5, 2008; **Amended:** Effective: January 19, 2009; **Amended:** Effective: March 30, 2010; **Amended:** Effective: May 23, 2011; **Amended:** Effective: May 29, 2012; **Amended:** Effective: January 22, 2013; **Amended:** Effective: May 28, 2013; **Amended:** Effective: September 24, 2013; **Amended:** Effective: November 24, 2015; **Amended:** Effective: June 2, 2017: **Amended:** Filed: February 28, 2020; Effective: April 13, 2020..

335-3-10-.03 **Appendices to 40 CFR 60.**

(1) Appendix A - Reference Method.

(2) Appendix B - Performance Specifications.

(3) Appendix F - Quality Assurance Procedures.

Author: Robert Cowne.
Statutory Authority: Code of Alabama 1975, §§22-28-14, 22-22A-5, 22-22A-6, 22-22A-8, and 41-22-9.
History: Effective Date: June 16, 1988. **Amended:** Effective: November 1, 1990. **Amended:** Effective: March 28, 1991. **Amended:** Effective: July 31, 1991. **Amended:** Effective: September 19, 1991. **Amended:** Effective: October 24, 1991. **Amended:** Effective: December 28, 1993. **Amended:** Effective: November 21, 1996. **Amended:** Effective: March 27, 1998. **Amended:** Effective: January 13, 2000. **Amended:** Effective: September 7, 2000. **Amended:** Effective: March 14, 2002. **Amended:** Effective: October 3, 2002. **Amended:** Effective: March 22, 2005. **Amended:** Effective: November 14, 2006. **Amended:** Effective: April 3, 2007. **Amended:** Effective: January 22, 2008. **Amended:** Effective: January 19, 2009. **Amended:** Effective: March 30, 2010. **Amended:** Effective: May 23, 2011. **Amended:** Effective: May 28, 2013. **Amended:** Effective: November 24, 2015. **Amended:** Effective: June 2, 2017. **Amended:** Filed: August 21, 2018; Effective: October 5, 2018. **Amended**: Filed: February 28, 2020; Effective: April 13, 2020.

335-3-10-.04 **Word or Phrase Substitutions.** In all the standards designated in

rule 335-3-10-.02 substitute:

(a) Director for Administrator.

(b) Department for U. S. Environmental Protection Agency (except in references).

Author:
Statutory Authority: Code of Alabama 1975, §§22-28-14, 22-22A-5, 22-22A-6, 22-22A-8, and 41-22-9.
History: Effective Date: May 25, 1976.
Amended: February 13, 1985; June 16, 1988; September 7, 2000.

ALABAMA DEPARTMENT OF ENVIRONMENTAL MANAGEMENT
AIR DIVISION - AIR POLLUTION CONTROL PROGRAM

CHAPTER 335-3-11
NATIONAL EMISSION STANDARDS FOR HAZARDOUS AIR POLLUTANTS

TABLE OF CONTENTS

335-3-11-.01 General
335-3-11-.02 Designated Emission Standards
333-3-11-.03 Appendices to 40 CFR 61
335-3-11-.04 Word or Phrase Substitutions
335-3-11-.05 Certification of Asbestos Abatement Contractors
335-3-11-.06 National Emission Standards for Hazardous Air Pollutants for Source Categories
335-3-11-.07 Appendices to 40 CFR 63

335-3-11-.01 General.

(1) The Environmental Protection Agency Regulations, and the Appendices applicable thereto, governing Hazardous Air Pollutants, 40 CFR, Part 61 and Appendices, designated in rules 335-3-11-.02 and 335-3-11-.03 and 40 CFR Part 63, and Appendices designated in rules 335-3-11-.06 and 335-3-11-.07 are incorporated by reference as they exist in 40 CFR 61 (2016), and 81 FR 59800 [08/30/2016, amendments to Subparts A and Appendix B], and 40 CFR 63 (July 1,2019), as amended by the word or phrase substitutions given in rule 335-3-11-.04. References for specific documents containing the complete text of subject regulations are given in Appendix C to these Regulations. Authorities which are not delegable to the state are also listed in Appendix C.

[NOTE: The standards pertaining to the Consolidated Federal Air rule are located in chapter 335-3-11A.]

(a) The materials incorporated by reference are available for purchase and inspection at the Department's offices at 1400 Coliseum Boulevard, Montgomery, Alabama 36110.

(2) In the event of any conflict between the regulations contained in this chapter and regulations contained in other chapters, the more stringent regulations will take precedence.

(3) Definitions. For purposes of this chapter, the definitions listed in 40 CFR 61.02, Subpart A will apply in rules 335-3-11-.02 and 335-3-11-.03 and the definitions listed in 40 CFR 63.2, Subpart A will apply in rules 335-3-11-.06 and 335-3-11-.07.

Author:
Statutory Authority: Code of Alabama 1975, §§22-28-14, 22-22A-5, 22-22A-6, 22-22A-8, and 41-22-9.
History: Effective Date: May 25, 1976. **Amended:** Effective: February 13, 1985. **Amended:** Effective: June 9, 1987. **Amended:** Effective: June 16, 1988. **Amended:** Effective: November 1, 1990. **Amended:** Effective: March 28, 1991. **Amended:** Effective: July 31, 1991. **Amended:** Effective: September 19, 1991. **Amended:** Effective: October 30, 1992. **Amended:** Effective: December 28, 1993. **Amended:** Effective: November 23, 1995. **Amended:** Effective: November 21, 1996. **Amended:** Effective: September 25, 1997. **Amended:** Effective: March 27, 1998. **Amended:** Effective: November 19, 1998. **Amended:** Effective: July 15, 1999. **Amended:** Effective: January 13, 2000. **Amended:** Effective: September 7, 2000. **Amended:** Effective: March 14, 2002. **Amended:** Effective: October 3, 2002. **Amended:** Effective: April 3, 2003. **Amended:** Effective: October 2, 2003. **Amended:** Effective: March 22, 2005. **Amended:** Effective: December 12, 2005. **Amended:** Effective: July 11, 2006. **Amended:** Effective: April 3, 2007. **Amended:** Effective: January 22, 2008. **Amended:** Effective: August 5, 2008. **Amended:** Effective: January 19, 2009. **Amended:** Effective: March 30, 2010. **Amended:** Effective: May 23, 2011. **Amended:** Effective: May 29, 2012. **Amended:** Effective: January 22, 2013. **Amended:** Effective: May, 28, 2013. **Amended:** Effective: September 24, 2013. **Amended:** Effective: November 24, 2015. **Amended:** Effective: June 2, 2017. **Amended:** Filed: August 21, 2018; Effective: October 5, 2018. **Amended**: Filed: February 28, 2020; Effective: April 13, 2020.

335-3-11-.02 Designated Emission Standards.

(1) Subpart A – General Provisions.

(2) Subpart C - Beryllium.

(3) Subpart D - Beryllium Rocket Motor Firing.

(4) Subpart E - Mercury.

(5) Subpart F - Vinyl Chloride.

(6) Reserved.

(7) Reserved.

(8) Reserved.

(9) Subpart J - Benzene Equipment Leaks.

(10) Reserved.

(11) Subpart L - Benzene Emissions from Coke By-Product Recovery Plants.

(12) Subpart M - Asbestos.

(13) Subpart N - Standard for Inorganic Arsenic Emissions from Glass Manufacturing Plants.

(14) Subpart 0 - Standard for Inorganic Arsenic Emissions from Primary Copper Smelters

(15) Subpart P - Standard for Inorganic Arsenic Emission from Arsenic Trioxide and Metallic Arsenic Production Facilities.

(16) Reserved.

(17) Reserved.

(18) Reserved.

(19) Reserved.

(20) Reserved.

(21) Subpart V - Equipment Leaks (Fugitive Emission Sources).

(22) Reserved.

(23) Reserved.

(24) Subpart Y - Benzene Emissions from Benzene Storage Vessels.

(25) Reserved.

(26) Reserved.

(27) Subpart BB - Benzene Emissions from Benzene Transfer Operations.

(28) Reserved.

(29) Reserved.

(30) Reserved.

(31) Subpart FF - Benzene Emissions from Benzene Waste Operations.

Author:
Statutory Authority: Code of Alabama 1975, §§22-28-14, 22-22A-5, 22-22A-6, 22-22A-8, and 41-22-9.
History: Effective Date: May 25, 1976.
Amended: June 23, 1981; February 13, 1985; June 9, 1987; November 1, 1990; March 28, 1991; July 31, 1991; September 19, 1991; October 30, 1992; December 28, 1993; January 13, 2000; March 14, 2002; October 2, 2003; March 22, 2005; December 12, 2005; January 22, 2008: November 24, 2015; June 2,

2017.

335-3-11-.03 Appendices to 40 CFR 61.

(1) Appendix B - Test Methods

Author: Robert W. Cowne.
Statutory Authority: Code of Alabama 1975, §§22-28-14, 22-22A-5, 22-22A-6, 22-22A-8, and 41-22-9.
History: Effective Date: June 16, 1988
Amended: March 28, 1991; November 21, 1996; March 14, 2002: November 24, 2015; June 2, 2017.

335-3-11-.04 Word or Phrase Substitutions. In all of the standards designated in rules 335-3-11-.02 and 335-3-11-.06 substitute:

(a) Director for Administrator.

(b) Department for U. S. Environmental Protection Agency (except in references).

Author:
Statutory Authority: Code of Alabama 1975, §§22-28-14, 22-22A-5, 22-22A-6, 22-22A-8, and 41-22-9.
History: Effective Date: May 25, 1976.
Amended: February 13, 1985; June 16, 1988; November 23, 1995; September 7, 2000.

335-3-11-.05 Certification of Asbestos Abatement Contractors.

(1) Any person, firm, organization, or corporation who is the owner or operator of any asbestos removal project for which notification is required pursuant to the requirements of rule 335-3-11-.02(12) shall ensure that the parties executing the asbestos removal project are certified by the Department.

(2) Procedures for application for certification and recertification.

(a) An application for certification or recertification must be completed on forms that are supplied by the Department.

(b) Applications shall include, at minimum, the following information:

1. Lists of supervisors and workers, including their accreditation numbers issued by the state-approved accreditation program.

2. A list of asbestos removal operations performed by the party during the previous twelve (12) months.

3. Assurance that all supervisors or workers used in asbestos removal operations employed by the party shall have a current accreditation by the state-approved accreditation program before performing any work inside or outside a removal site.

4. A written certification from the principal officer or person stating that he/she understands state regulations pertaining to asbestos removal and will abide by said regulations.

(c) The Department may issue a certificate of certification to a party if it has been determined that:

1. Each supervisor and worker involved in asbestos removal is accredited by the state-approved accreditation program.

2. All application forms and attachments are properly completed and have been submitted.

3. The application fees have been paid.

(d) The Department may deny certification if it determines that the applicant is unable or unwilling to fully comply with applicable requirements, procedures, rules and standards promulgated or established by the Commission or the Department. All notices regarding the denial of certification will be sent via certified mail.

(3) Parties must reapply annually in order to maintain proper certification.

(4) A copy of the party's current certification must be available at each of its removal sites.

(5) Annual accreditation of supervisors and workers is required.

(6) Copies of accreditation for every supervisor and worker must be kept at each removal site.

(7) The Department may revoke certification of any party duly certified if the party repeatedly fails to comply with applicable rules and standards or fails to comply with any certification requirements.

(8) The requirements of this rule become enforceable 120 days after the effective date.

Author: Ludwig C. Hoffmann III.
Statutory Authority: Code of Alabama 1975, §§22-28-14, 22-22A-5, 22-22A-6, 22-22A-8, and 22-39-5.
History: Effective Date: November 1, 1990.
Amended: April 27, 1995; November 21, 1996.

335-3-11-.06 <u>National Emission Standards for Hazardous Air Pollutants for Source Categories</u>.

(1) Subpart A – General Provisions.

(2) Subpart B - Requirements for Control Technology Determinations for Major Sources in Accordance With Clean Air Act Sections, Sections 112(g) and 112(j).

[NOTE: The requirements for implementation of §112(g) are found in rule 335-3-14-.06]

(3) Subpart D - Regulations Governing Compliance Extensions for Early Reductions of Hazardous Air Pollutants.

(4) Reserved.

(5) Subpart F - National Emission Standards for Hazardous Air Pollutants From Synthetic Organic Chemical Manufacturing Industry.

(6) Subpart G - National Emission Standards for Organic Hazardous Air Pollutants From Synthetic Organic Chemical Manufacturing Industry Process Vents, Storage Vessels, Transfer Operations, and Wastewater.

(7) Subpart H - National Emission Standards for Organic Hazardous Air Pollutants for Equipment Leaks.

(8) Subpart I - National Emission Standards for Organic Hazardous Air Pollutants for Certain Processes Subject to the Negotiated Regulation for Equipment Leaks.

(9) Reserved.

(10) Reserved.

(11) Subpart L - National Emission Standards for Coke Oven Batteries.

(12) Subpart M - National Perchloroethylene Air Emission Standards for Dry Cleaning Facilities.

(13) Subpart N - National Emission Standards for Chromium Emissions from Hard and Decorative Chromium Electroplating and Chromium Anodizing Tanks.

(14) Subpart O - Ethylene Oxide Emissions Standards for Sterilization Facilities.

(15) Reserved.

(16) Subpart Q - National Emission Standards for Hazardous Air Pollutants for Industrial Process Cooling Towers.

(17) Subpart R - National Emission Standards for Gasoline Distribution Facilities (Bulk Gasoline Terminals and Pipeline Breakout Stations).

(18) Subpart S - National Emission Standards for Hazardous Air Pollutants for Pulp and Paper Production.

(19) Subpart T - National Emission Standards for Halogenated Solvent Cleaning.

(20) Subpart U - National Emission Standards for Hazardous Air Pollutant Emissions: Group I Polymers and Resins.

(21) Reserved.

(22) Subpart W - National Emission Standards for Hazardous Air Pollutants for Epoxy Resins Production and Non-Nylon Polyamides Production.

(23) Subpart X - National Emission Standards from Secondary Lead Smelting.

(24) Subpart Y - National Emission Standards for Marine Tank Vessel Loading Operations [with the exceptions of those subsections referencing the Valdez Marine Terminal (VMT) in Alaska].

(25) Reserved.

(26) Subpart AA – National Emission Standards for Hazardous Air Pollutants from Phosphoric Acid Manufacturing Plants.

(27) Subpart BB – National Emission Standards for Hazardous Air Pollutants from Phosphate Fertilizers Production Plants.

(28) Subpart CC - National Emission Standards for Hazardous Air Pollutants from Petroleum Refineries.

(29) Subpart DD - National Emission Standards for Hazardous Air Pollutants from Off-Site Waste and Recovery Operations.

(30) Subpart EE - National Emission Standards for Magnetic Tape Manufacturing Operations.

(31) Reserved.

(32) Subpart GG – National Emission Standards for Aerospace Manufacturing and Rework Facilities.

(33) Subpart HH – National Emission Standards for Hazardous Air Pollutants From Oil and Natural Gas Production Facilities.

(34) Subpart II - National Emission Standards for Shipbuilding and Ship Repair (Surface Coating) Operations.

(35) Subpart JJ - National Emission Standards for Wood Furniture Manufacturing Operations.

(36) Subpart KK - National Emission Standards for the Printing and Publishing Industry.

(37) Reserved.

(38) Subpart MM – National Emission Standards for Hazardous Air Pollutants for Chemical Recovery Combustion Sources at Kraft, Soda, Sulfite, and Stand-Alone Semichemical Pulp Mills.

(39) Reserved.

(40) Subpart OO - National Emission Standards for Tanks - Level 1.

(41) Subpart PP - National Emission Standards for Containers.

(42) Subpart QQ – National Emission Standards for Surface Impoundments.

(43) Subpart RR - National Emission Standards for Individual Drain Systems.

(44) Subpart SS – National Emission Standards Closed Vent Systems, Control Devices, Recovery Devices and Routing to a Fuel Gas System or a Process.

(45) Subpart TT – National Emission Standards for Equipment Leaks – Control Level 1.

(46) Subpart UU – National Emission Standards for Equipment Leaks – Control Level 2 Standards.

(47) Subpart VV National Emission Standards for Oil-Water Separators and Organic-Water Separators.

(48) Subpart WW – National Emission Standards for Storage Vessels (Tanks) – Control Level 2.

(49) Subpart XX – National Emission Standards for Ethylene Manufacturing Process Units: Heat Exchange Systems and Waste Operations.

(50) Subpart YY – National Emission Standards for Hazardous Air Pollutants for Source Categories: Generic Maximum Achievable Control Technology Standards.

(51) Reserved.

(52) Reserved.

(53) Reserved.

(54) Subpart CCC – National Emission Standards for Hazardous Air Pollutants for Steel Pickling – HCl Process Facilities and Hydrochloric Acid Regeneration Plants.

(55) Subpart DDD – National Emission Standards for Hazardous Air Pollutants for Mineral Wool Production.

(56) Subpart EEE - National Emission Standards for Hazardous Air Pollutants From Hazardous Waste Combustors.

(57) Reserved.

(58) Subpart GGG - National Emission Standards for Hazardous Air Pollutants for Source Categories: Pharmaceuticals Production.

(59) Subpart HHH – National Emission Standards for Hazardous Air Pollutants from Natural Gas Transmission and Storage Facilities.

(60) Subpart III - National Emission Standards for Hazardous Air Pollutants for Flexible Polyurethane Foam Production.

(61) Subpart JJJ - National Emission Standards for Hazardous Air Pollutant Emissions: Group IV Polymers and Resins.

(62) Reserved.

(63) Subpart LLL - National Emission Standards for Hazardous Air Pollutants From the Portland Cement Manufacturing Industry.

(64) Subpart MMM – National Emission Standards for Hazardous Air Pollutants for Pesticide Active Ingredient Production.

(65) Subpart NNN – National Emission Standards for Hazardous Air Pollutants for Wool Fiberglass Manufacturing.

(66) Subpart OOO – National Emission Standards for Hazardous Air Pollutants for Amino/Phenolic Resins Production.

(67) Subpart PPP – National Emission Standards for Hazardous Air Pollutants for Polyether Polyols Production.

(68) Reserved.

(69) Subpart RRR – National Emission Standards for Hazardous Air Pollutants for Secondary Aluminum Production.

(70) Reserved.

(71) Reserved.

(72) Subpart UUU – National Emission Standards for Hazardous Air

Pollutants for Petroleum Refineries: Catalytic Cracking Units, Catalytic Reforming Units, and Sulfur Recovery Units.

(73) Subpart VVV – National Emission Standards for Hazardous Air Pollutants: Publicly Owned Treatment Works.

(74) Reserved.

(75) Subpart XXX – National Emission Standards for Hazardous Air Pollutants for Ferroalloys Production: Ferromanganese and Silicomanganese.

(76) Reserved.

(77) Reserved.

(78) Subpart AAAA –National Emission Standards for Hazardous Air Pollutants: Municipal Solid Waste Landfills.

(79) Reserved.

(80) Subpart CCCC – National Emission Standards for Hazardous Air Pollutants: Nutritional Yeast.

(81) Subpart DDDD – National Emission Standards for Hazardous Air Pollutants: Plywood and Composite Wood Products.

(82) Subpart EEEE – National Emission Standards for Hazardous Air Pollutants: Organic Liquids Distribution (Non-Gasoline).

(83) Subpart FFFF – National Emission Standards for Hazardous Air Pollutants: Miscellaneous Organic Chemical Manufacturing.

(84) Subpart GGGG – National Emission Standards for Hazardous Air Pollutants: Solvent Extraction for Vegetable Oil Production.

(85) Subpart HHHH – National Emission Standards for Hazardous Air Pollutants for Wet-Formed Fiberglass Mat Production.

(86) Subpart IIII – National Emission Standards for Hazardous Air Pollutants: Surface Coating of Automobiles and Light-Duty Trucks.

(87) Subpart JJJJ – National Emission Standards for Hazardous Air Pollutants: Paper and Other Web Coating.

(88) Subpart KKKK – National Emission Standards for Hazardous Air Pollutants: Surface Coating of Metal Cans.

(89) Reserved.

(90) Subpart MMMM – National Emission Standards for Hazardous Air Pollutants for Surface Coating of Miscellaneous Metal Parts and Products.

(91) Subpart NNNN – National Emission Standards for Hazardous Air Pollutants: Surface Coating of Large Appliances.

(92) Subpart OOOO – National Emission Standards for Hazardous Air Pollutants: Printing, Coating, and Dyeing of Fabrics and Other Textiles.

(93) Subpart PPPP – National Emission Standards for Hazardous Air Pollutants for Surface Coating of Plastic Parts and Products.

(94) Subpart QQQQ – National Emission Standards for Hazardous Air Pollutants: Surface Coating of Wood Building Products.

(95) Subpart RRRR – National Emission Standards for Hazardous Air Pollutants: Surface Coating of Metal Furniture.

(96) Subpart SSSS – National Emission Standards for Hazardous Air Pollutants: Surface Coating of Metal Coil.

(97) Reserved.

(98) Reserved.

(99) Subpart VVVV – National Emission Standards for Hazardous Air Pollutants for Boat Manufacturing.

(100) Subpart WWWW – National Emission Standards for Hazardous Air Pollutants: Reinforced Plastic Composites Production.

(101) Subpart XXXX – National Emission Standards for Hazardous Air Pollutants: Rubber Tire Manufacturing.

(102) Subpart YYYY – National Emission Standards for Hazardous Air Pollutants for Stationary Combustion Turbines.

(103) Subpart ZZZZ – National Emission Standards for Hazardous Air Pollutants for Stationary Reciprocating Internal Combustion Engines (major source provisions only).

(104) Subpart AAAAA – National Emission Standards for Hazardous Air Pollutants for Lime Manufacturing Plants.

(105) Subpart BBBBB – National Emission Standards for Hazardous Air Pollutants for Semiconductor Manufacturing.

(106) Subpart CCCCC – National Emission Standards for Hazardous Air Pollutants for Coke Ovens: Pushing, Quenching, and Battery Stacks.

(107) Subpart DDDDD – National Emission Standards for Hazardous Air Pollutants for Major Sources: Industrial, Commercial, and Institutional Boilers and Process Heaters.

(108) Subpart EEEEE – National Emission Standards for Hazardous Air Pollutants for Iron and Steel Foundries.

(109) Subpart FFFFF – National Emission Standards for Hazardous Air Pollutants for Integrated Iron and Steel Manufacturing Facilities.

(110) Subpart GGGGG – National Emission Standards for Hazardous Air Pollutants: Site Remediation.

(111) Subpart HHHHH – National Emission Standards for Hazardous Air Pollutants: Miscellaneous Coating Manufacturing.

(112) Subpart IIIII – National Emission Standards for Hazardous Air Pollutants: Mercury Emissions From Mercury Cell Chlor-Alkali Plants.

(113) Subpart JJJJJ – National Emission Standards for Hazardous Air Pollutants for Brick and Structural Clay Products Manufacturing.

(114) Subpart KKKKK – National Emission Standards for Hazardous Air Pollutants for Clay Ceramics Manufacturing.

(115) Subpart LLLLL – National Emission Standards for Hazardous Air Pollutants: Asphalt Processing and Asphalt Roofing Manufacturing.

(116) Reserved.

(117) Subpart NNNNN – National Emission Standards for Hazardous Air Pollutants: Hydrochloric Acid Production.

(118) Reserved.

(119) Subpart PPPPP – National Emission Standards for Hazardous Air Pollutants for Engine Test Cells/Standards.

(120) Subpart QQQQQ – National Emission Standards for Hazardous Air Pollutants for Friction Materials Manufacturing Facilities

(121) Subpart RRRRR – National Emission Standards for Hazardous Air Pollutants: Taconite Iron Ore Processing.

(122) Reserved.

(123) Subpart TTTTT – National Emission Standards for Hazardous Air Pollutants for Primary Magnesium Refining.

(124) Subpart UUUUU– National Emission Standards for Hazardous Air Pollutants for Coal- and Oil-Fired Electric Utility Steam Generating Units.

(125) Reserved.

(126) Reserved.

(127) Reserved.

(128) Subpart YYYYY– National Emission Standards for Hazardous Air Pollutants for Electric arc Furnace Steelmaking Facilities Area Sources.

(129) Subpart ZZZZZ – National Emission Standards for Hazardous Air Pollutants for Iron and Steel Foundries Area Sources.

(130) Reserved.

(131) Reserved.

(132) Reserved.

(133) Subpart DDDDDD – National Emission Standards for Hazardous Air Pollutants for Polyvinyl Chloride and Copolymers Production Area Sources.

(134) Subpart EEEEEE – National Emission Standards for Hazardous Air Pollutants for Primary Copper Smelting Area Sources.

(135) Subpart FFFFFF – National Emission Standards for Hazardous Air Pollutants for Secondary Copper Smelting Area Sources.

(136) Subpart GGGGGG – National Emission Standards for Hazardous Air Pollutants for Primary Nonferrous Metals Area Sources – Zinc, Cadmium, and Beryllium.

(137) Reserved.

(138) Reserved.

(139) Reserved.

(140) Reserved.

(141) Subpart LLLLLL – National Emission Standards forHazardous Air Pollutants for Acrylic and Modacrylic Fibers Production Area Sources.

(142) Subpart MMMMMM – National Emission Standards for Hazardous Air Pollutants for Carbon Black Production Area Sources.

(143) Reserved.

(144) Subpart OOOOOO – National Emission Standards for Hazardous Air Pollutants for Flexible Polyurethane Foam Production and Fabrication Area Sources.

(145) Reserved.

(146) Subpart QQQQQQ – National Emission Standards for Hazardous Air Pollutants for Wood Preserving Area Sources.

(147) Reserved.

(148) Reserved.

(149) Subpart TTTTTT– National Emission Standards for Hazardous Air Pollutants for Secondary nonferrous Metals Processing Area Sources.

(150) Reserved.

(151) Subpart VVVVVV– National Emission Standards for Hazardous Air Pollutants for Chemical Manufacturing Area Sources.

(152) Reserved.

(153) Reserved.

(154) Subpart YYYYYY– National Emission Standards for Hazardous Air Pollutants for Ferroalloys Production Facilities Area Sources.

(155) Subpart ZZZZZZ – National Emission Standards for Hazardous Air Pollutants for Aluminum, Copper, and Other Nonferrous Foundries Area Sources.

(156) Subpart AAAAAAA – National Emission Standards for Hazardous Air Pollutants for Asphalt Processing and Asphalt Roofing Manufacturing Area Sources

(157) Reserved.

(158) Subpart CCCCCCC – National Emission Standards for Hazardous Air Pollutants for Paints and Allied Products Manufacturing Area Sources.

(159) Subpart DDDDDDD – National Emission Standards for Hazardous Air Pollutants for Prepared Feeds Manufacturing Area Sources.

(160) Reserved.

(161) Reserved.

(162) Reserved.

(163) Subpart HHHHHHH – National Emission Standards for Hazardous Air Pollutant Emissions for Polyvinyl Chloride and Copolymers Production.

Author: Richard E. Grusnick.
Statutory Authority: Code of Alabama 1975, §§22-28-14, 22-22A-5, 22-22A-6, 22-22A-8, and 41-22-9.
History: Effective Date: November 23, 1995. **Amended:** Effective: November 21, 1996. **Amended:** Effective: September 25, 1997. **Amended:** Effective: March 27, 1998. **Amended:** Effective: November 19, 1998. **Amended:** Effective: July 15, 1999. **Amended:** Effective: January 13, 2000. **Amended:** Effective: September 7, 2000. **Amended:** Effective: March 14, 2002. **Amended:** Effective: October 3, 2002.

Amended: Effective: April 3, 2003. **Amended:** Effective: October 2, 2003. **Amended:** Effective: March 22, 2005. **Amended:** Effective: December 12, 2005. **Amended:** Effective: July 11, 2006. **Amended:** Effective: April 3, 2007. **Amended:** Effective: January 22, 2008. **Amended:** Effective: August 5, 2008. **Amended:** Effective: January 19, 2009. **Amended:** Effective: March 30, 2010. **Amended:** Effective: May 23, 2011. **Amended:** Effective: May 29, 2012. **Amended:** Effective: January 22, 2013. **Amended:** Effective: May 28, 2013. **Amended:** Effective: September 24, 2013. **Amended:** Effective: November 24, 2015. **Amended:** Effective: June 2, 2017. **Amended:** Filed: August 21, 2018; Effective: October 5, 2018; **Amended**: Filed: February 28, 2020; Effective April 13, 2020.

335-3-11-.07 Appendices to 40 CFR 63.

(1) Appendix A - Test Methods.

(2) Appendix B - Sources Defined for Early Reduction Provisions.

(3) Appendix C - Determination of the Fraction Biodegraded (F_{bio}) in a Biological Treatment Unit.

(4) Appendix D - Alternative Validation Procedure for EPA Waste and Wastewater Methods.

(5) Appendix E – Monitoring Procedure for Nonthoroughly Mixed Open Biological Treatment System Systems at Kraft Pulp Mills Under Unsafe Sampling Conditions.

Author: Richard E. Grusnick.
Statutory Authority: Code of Alabama 1975, §§22-28-14, 22-22A-5, 22-22A-6, 22-22A-8, and 41-22-9.
History: Effective Date: November 23, 1995. **Amended:** Effective: November 21, 1996. **Amended:** Effective: September 25, 1997. **Amended:** Effective: November 19, 1998. **Amended:** Effective: July 15, 1999. **Amended:** Effective: January 13, 2000. **Amended:** Effective: March 14, 2002. **Amended:** Effective: March 30, 2010. **Amended:** Effective: May 23, 2011. **Amended:** Effective: May 28, 2013. **Amended:** Effective: November 24, 2015. **Amended:** Effective: June 2, 2017. **Amended:** Filed: August 21, 2018; Effective: October 5, 2018; **Amended**: Filed: February 28, 2020; Effective April 13, 2020.

ALABAMA DEPARTMENT OF ENVIRONMENTAL MANAGEMENT
AIR DIVISION – AIR POLLUTION CONTROL PROGRAM

CHAPTER 335-3-11A CONSOLIDATED FEDERAL AIR RULE REGARDING NEW SOURCE PERFORMANCE STANDARDS AND NATIONAL EMISSION STANDARDS FOR HAZARDOUS AIR POLLUTANTS

TABLE OF CONTENTS

335-3-11A-.01 General
335-3-11A-.02 Designated Emission Standards
335-3-11A-.03 Word or Phrase Substitutions

335-3-11A-.01 General.

(1) The Environmental Protection Agency Regulations designated in rule 335-3-11A-.02 are incorporated by reference as they exist in 40 CFR 65 (2015), as amended by the word or phrase substitutions given in rule 335-3-11A-.03, except for the provisions found in 65.14, which are excluded. References for specific documents containing the complete text of subject regulations are given in Appendix C to these Regulations. Authorities that are not delegable to the state are also listed in Appendix C.

(a) The materials incorporated by reference are available for purchase and inspection at the Department's offices at 1400 Coliseum Boulevard, Montgomery, Alabama 36110.

(2) In the event of any conflict between the regulations contained in this chapter and regulations contained in other chapters, the more stringent regulations will take precedence.

(3) Definitions. For purposes of this chapter, the definitions listed in 40 CFR 65.2, Subpart A will apply in rule 335-3-11A-.02.

Author: Ronald W. Gore.
Statutory Authority: Code of Alabama 1975, §§22-28-14, 22-22A-5, 22-22A-6, 22-22A-8, and 41-22-9.
History: Effective Date: March 14, 2002.
Amended: October 2, 2003; August 5, 2008; November 24, 2015.

335-3-11A-.02 Designated Emission Standards.

(1) Subpart A – General Provisions.

(2) Subpart B – Reserved.

(3) Subpart C – Storage Vessels.

(4) Subpart D – Process Vents.

(5) Subpart E – Transfer Racks.

(6) Subpart F – Equipment Leaks.

(7) Subpart G – Closed Vent Systems, Control Devices, and Routing to a Fuel Gas System or a Process.

Author: Ronald W. Gore.
Statutory Authority: Code of Alabama 1975, §§22-28-14, 22-22A-5, 22-22A-6, 22-22A-8, and 41-22-9.
History: Effective Date: March 14, 2002.
Amended: August 5, 2008; November 24, 2015.

335-3-11A-.03 Word or Phrase Substitutions. In all of the standards designated in rule 335-3-11A-.02 substitute:

(a) Director for Administrator.

(b) Department for U. S. Environmental Protection Agency (except in references).

Author: Ronald W. Gore.
Statutory Authority: Code of Alabama 1975, §§22-28-14, 22-22A-5, 22-22A-6, 22-22A-8, and 41-22-9.
History: Effective Date: March 14, 2002.
Amended:

ALABAMA DEPARTMENT OF ENVIRONMENTAL MANAGEMENT
AIR DIVISION – AIR POLLUTION CONTROL PROGRAM

CHAPTER 335-3-12
CONTINUOUS MONITORING REQUIREMENTS FOR EXISTING SOURCES

TABLE OF CONTENTS

335-3-12-.01 Definitions
335-3-12-.02 Emission Monitoring and Reporting Requirements
335-3-12-.03 Monitoring System Malfunction
335-3-12-.04 Alternate Monitoring and Reporting Requirements
335-3-12-.05 Exemptions and Extensions

335-3-12-.01 Definitions. For the purposes of this chapter, the following terms will have the meanings ascribed in this rule:

(a) "Emission Standard" shall mean a regulation (or portion thereof) setting forth an allowable rate of emissions, level of opacity, or prescribing equipment or fuel specifications that result in control of air pollution emissions.

(b) "Capacity Factor" shall mean the ratio of the average load on a machine or equipment for the period of time considered to the capacity rating of the machine or equipment.

(c) "Excess Emissions" shall mean emissions of an air pollutant in excess of an emission standard.

(d) "Sulfuric Acid Plant" shall mean any facility producing sulfuric acid by the contact process by burning elemental sulfur, alkylation acid, hydrogen sulfide, or acid sludge, but does not include facilities where conversion to sulfuric acid is utilized primarily as a means of preventing emissions to the atmosphere of sulfur dioxide or other sulfur compounds.

(e) "Fossil Fuel-Fired Steam Generator" shall mean a furnace or boiler used in the process of burning fossil fuel for the primary purpose of producing steam by heat transfer.

Author: Ronald W. Gore.
Statutory Authority: Code of Alabama 1975, §§22-28-14, 22-22A-5, 22-22A-6, and 22-22A-8.
History: Effective Date: October 26, 1976.
Amended:

335-3-12-.02 <u>Emission Monitoring and Reporting Requirements</u>.

(1) Sources in the following categories which initiated construction prior to August 17, 1971, are subject to the requirements of this chapter:

(a) Fossil fuel-fired steam generators.

(b) Sulfuric acid plants.

(c) Sources in these categories which are constructed after August 17, 1971, are subject to the emission monitoring requirements of chapter 335-3-10. This chapter is intended to supplement existing regulations, and no rule thereof shall be construed to interfere with the enforcement of other provisions of the Alabama Department of Environmental Management.

(2) The Director shall require the owner or operator of an emission source listed in paragraph (1) of this rule to install, calibrate, operate, and maintain all monitoring equipment necessary for continuously monitoring the pollutants specified in paragraphs (3) and (4) of this rule. The specific source categories listed in paragraph (1) of this rule must complete the installation and performance testing of monitoring equipment and begin monitoring and recording within eighteen months from the date of the Environmental Protection Agency's approval of these regulations. Within six (6) months of such approval, all affected sources must present a detailed plan for complying with the requirements of this chapter to the Director. The Director shall condition written approval of such plan upon the requirement that the plan will meet the minimum reporting requirements set forth in Divisions 4 and 5 of Appendix P of 40 CFR 51. More stringent reporting procedures may be required in the Director's discretion.

(3) Fossil fuel-fired steam generators, as defined in this chapter, with an annual average capacity factor of greater than thirty percent (30%), as reported to the Federal Power Commission for calendar year 1974, or was otherwise demonstrated to the Director by the owner or operator, shall conform with the following monitoring requirements when such facility is subject to an emission standard for the pollutant in question:

(a) A continuous monitoring system for the measurement of opacity shall be installed, calibrated, maintained, and operated by the owner or operator of any such steam generator of greater than 250 million BTU per hour heat input except where:

1. gaseous fuel is the only fuel burned, or

2. oil or a mixture of gas and oil are the only fuels burned and the source is able to comply with the applicable particulate matter and opacity regulations without utilization of particulate matter collection equipment, and where the source has never been found, through any administrative or judicial proceedings, to be in violation of any visible emission standard of the applicable plan.

(b) A continuous monitoring system for the measurement of sulfur dioxide shall be installed, calibrated, maintained, and operated on any fossil fuel-fired steam generator of greater than 250 million BTU per hour heat input which has installed equipment designed for the desulfurization of flue gas.

(c) A continuous monitoring system for the measurement of the percent oxygen or carbon dioxide in stack gases shall be installed, calibrated, operated, and maintained on fossil fuel-fired steam generators where measurements of oxygen or carbon dioxide in the flue gas are required to convert sulfur dioxide continuous emission monitoring data, to units of the emission standard in chapter 335-3-5.

(4) Sulfuric acid plants, as defined in this chapter, with greater than 300 tons per day production capacity, the production being expressed as 100 percent (100%) acid, shall install, calibrate, maintain, and operate a continuous monitoring system for the measurement of sulfur dioxide for each sulfuric acid producing facility within such plant.

(5) All monitoring equipment specified in this chapter shall meet the performance specifications described in Appendix B of 40 CFR 60, except that the Director may from time to time specify different data averaging times and sampling intervals to permit accurate determinations of compliance with specific Air Pollution Control Rules and Regulations. The monitoring equipment shall also be installed, calibrated, operated, and maintained in accordance with the procedures in Appendix B of 40 CFR 60 and the minimum specifications of Division 3 in Appendix P of 40 CFR 51.

Author: Ronald W. Gore.
Statutory Authority: Code of Alabama 1975, §§22-28-14, 22-22A-5, 22-22A-6, and 22-22A-8.
History: Effective Date: October 26, 1976.
Amended: November 21, 1996; March 27, 1998; September 7, 2000.

335-3-12-.03 Monitoring System Malfunction.

(1) Malfunctions of a monitoring system required in this chapter which last more than forty-eight (48) hours must be reported as expeditiously as possible to the Director in a written report. This report should include statements as to the time the monitor malfunctioned, the nature of the malfunction, the corrective action being taken, the estimated repair time, and any other information needed to demonstrate to the Director that the malfunction was unavoidable. The Director shall be informed of the time at which the monitor again becomes operational.

(2) The Director may temporarily exempt an owner or operator from the monitoring and reporting requirements of this chapter if it is demonstrated to the Director's satisfaction that the malfunction was unavoidable and is being repaired as expeditiously as possible.

Author: Ronald W. Gore.
Statutory Authority: Code of Alabama 1975, §§22-28-14, 22-22A-5, 22-22A-6, and 22-22A-8.
History: Effective Date: October 26, 1976.
Amended:

335-3-12-.04 Alternate Monitoring and Reporting Requirements.

(1) Alternative monitoring and reporting requirements may be approved by the Director on a case-by-case basis, provided the following statements and explanations are contained in a written request to the Director:

(a) the basis or reason that alternative monitoring and reporting requirements are desirable and necessary;

(b) a proposal of alternative monitoring and reporting

requirements;

(c) any other information needed by the Director to make a determination of the desirability of alternative requirements.

(2) Request for alternative monitoring and reporting requirements may be made in certain situations, including, but not limited to, the following:

(a) when installation of a continuous monitoring system or device required by this chapter would not provide accurate determinations of emissions;

(b) when the affected facility is operated less than thirty (30) days per year;

(c) when effluents from two (2) or more sources of significantly different design and operating characteristics are combined before release to the atmosphere or when the effluent from one source is released to the atmosphere through more than one (1) point;

(d) when the Director determines that the requirements prescribed by this chapter would impose an extreme economic burden on the source owner or operator. The determination of an extreme economic burden shall be made on the basis of whether meeting the requirements prescribed by this chapter would produce serious hardship without equal or greater benefit to the public;

(e) when the monitoring systems prescribed by this chapter cannot be installed due to physical limitations at the facility. The determination of such limitations shall be made on the basis of whether meeting the requirements prescribed by this chapter would necessitate significant reconstruction of the facility.

(3) The Director may require the submission of additional information as he deems appropriate to evaluate the request for alternative requirements. Upon making a determination that the source should be subject to alternative monitoring and reporting requirements, the Director may approve either the proposed alternative monitoring and reporting requirements or any other monitoring and reporting requirements that he deems appropriate and feasible.

Author: Ronald W. Gore.
Statutory Authority: Code of Alabama 1975, §§22-28-14, 22-22A-5, 22-22A-6, and 22-22A-8.
History: Effective Date: October 26, 1976.
Amended:

335-3-12-.05 Exemptions and Extensions.

(1) The Director may exempt any source from the requirements of this chapter if such source is scheduled for permanent shutdown by October 6, 1980 provided that adequate evidence and guarantees are provided to clearly show that the source will cease operations prior to such date.

(2) The Director may grant reasonable extensions of the time provided for installation of monitors for facilities unable to meet the prescribed eighteen (18) month time frame, provided that the owner or operator of such facility demonstrates that good faith efforts have been made to obtain and install such devices within the prescribed timeframe.

(3) If, prior to September 11, 1974, an affected source purchased an emission monitor which does not conform to the requirements of Appendix B of 40 CFR 60, then the source may be granted a five (5) year period from the date of the Environmental Protection Agency's approval of this revision, during which time the monitor installed on that source is exempt from applicable performance specifications.

Author: Ronald W. Gore.
Statutory Authority: Code of Alabama 1975, §§22-28-14, 22-22A-5, 22-22A-6, and 22-22A-8.
History: Effective Date: October 26, 1976.
Amended:

ALABAMA DEPARTMENT OF ENVIRONMENTAL MANAGEMENT
AIR DIVISION - AIR POLLUTION CONTROL PROGRAM

CHAPTER 335-3-13
CONTROL OF FLUORIDE EMISSIONS

TABLE OF CONTENTS

335-3-13-.01 Definitions
335-3-13-.02 Superphosphoric Acid Plants
335-3-13-.03 Diammonium Phosphate Plants
335-3-13-.04 Triple Superphosphate Plants
335-3-13-.05 Granular Triple Superphosphate Storage Facilities
335-3-13-.06 Wet Process Phosphoric Acid Plants

335-3-13-.01 Definitions. Meaning of Terms. As used in these rules and regulations, terms referenced in 40 CFR §§60.201, 60.211, 60.221, 60.231, shall have the meaning ascribed in this rule.

Author: Marilyn G. Elliott.
Statutory Authority: Code of Alabama 1975, §§22-28-14, 22-22A-5, 22-22A-6, and 22-22A-8.
History: Effective Date: February 28, 1978.
Amended:

335-3-13-.02 Superphosphoric Acid Plants.

(1) Applicability. For the purpose of this rule, the affected facility includes any combination of existing evaporators, hotwells, acid sumps, and cooling tanks.

(2) Superphosphoric Acid Plants. No owner or operator shall cause to be discharged into the atmosphere from any affected facility any gases which contain total fluorides in excess of 5.0 g/metric ton of equivalent P_2O_5 feed (0.010 lb/ton).

(3) Test Methods and Procedures. Reference methods described in 40 CFR §60.214 shall be used to determine compliance with paragraph (2) of this rule.

Author: Marilyn G. Elliott.
Statutory Authority: Code of Alabama 1975, §§22-28-14, 22-22A-5, 22-22A-6, and 22-22A-8.
History: Effective Date: February 28, 1978.
Amended: November 21, 1996.

335-3-13-.03 Diammonium Phosphate Plants.

(1) Applicability. For the purpose of this rule, the affected facility includes any combination of existing reactors, granulators, dryers, coolers, screens, and mills.

(2) Diammonium Phosphate Plants. No owner or operator shall cause to be discharged into the atmosphere from any affected facility any gases which contain total fluorides in excess of 30 g/metric ton of equivalent P_2O_5 feed (0.060 lb/ton).

(3) Test Methods and Procedures. Reference methods described in 40 CFR §60.224 shall be used to determine compliance with paragraph (2) of this rule.

Author: Marilyn G. Elliott.
Statutory Authority: Code of Alabama 1975, §§22-28-14, 22-22A-5, 22-22A-6, and 22-22A-8.
History: Effective Date: February 28, 1978.
Amended: November 21, 1996.

335-3-13-.04 Triple Superphosphate Plants.

(1) Applicability. For the purpose of this rule, the affected facility includes any combination of existing mixers, curing belts (dens), reactors, granulators, dryers, coolers, screens, mills, and facilities which store run-of-pile triple superphosphate.

(2) Triple Superphosphate Plants. No owner or operator shall cause to be discharged into the atmosphere from any affected facility any gases which contain total fluorides in excess of 100 g/metric ton of equivalent P_2O_5 feed (0.20 lb/ton).

(3) Test Methods and Procedures. Reference methods described in 40 CFR §60.234 shall be used to determine compliance with paragraph (2) of this rule.

Author: Marilyn G. Elliott.
Statutory Authority: Code of Alabama 1975, §§22-28-14, 22-22A-5, 22-22A-6, and 22-22A-8.
History: Effective Date: February 28, 1978.
Amended: November 21, 1996.

335-3-13-.05 Granular Triple Superphosphate Storage Facilities.

(1) Applicability. For the purpose of this rule, the affected facility includes any combination of existing storage or curing piles, conveyors, elevators, screens, and mills.

(2) Granular Triple Superphosphate Storage Facilities. No owner or operator shall cause to be discharged into the atmosphere from any affected facility any gases which contain total fluorides in excess of 0.25 g/hr/metric ton of equivalent P_2O_5 stored (5.0×10^{-4} lb/hr/ton of equivalent P_2O_5 stored).

(3) Test Methods and Procedures. Reference methods described in 40 CFR §60.244 shall be used to determine compliance with paragraph (2) of this rule.

Author: Marilyn G. Elliott.
Statutory Authority: Code of Alabama 1975, §§22-28-14, 22-22A-5, 22-22A-6, and 22-22A-8.
History: Effective Date: February 28, 1978.
Amended: November 21, 1996.

335-3-13-.06 Wet Process Phosphoric Acid Plants.

(1) Applicability. For the purpose of this rule, the affected facility includes any combination of existing reactors, filters, evaporators, and hotwells.

(2) Wet Process Phosphoric Acid Plants. No owner or operator shall cause to be discharged into the atmosphere from any affected facility any gases which contain total fluorides in excess of 10.0 g/metric ton of equivalent P_2O_5 feed (0.020 lb/ton).

(3) Test Methods and Procedures. Reference methods described in 40 CFR §60.204 shall be used to determine compliance with paragraph (2) of this rule.

Author: Marilyn G. Elliott.
Statutory Authority: Code of Alabama 1975, §§22-28-14, 22-22A-5, 22-22A-6, and 22-22A-8.
History: Effective Date: February 28, 1978.
Amended: November 21, 1996.

ALABAMA DEPARTMENT OF ENVIRONMENTAL MANAGEMENT
AIR DIVISION - AIR POLLUTION CONTROL PROGRAM

CHAPTER 335-3-14 AIR PERMITS

TABLE OF CONTENTS

335-3-14-.01 General Provisions
335-3-14-.02 Permit Procedure
335-3-14-.03 Standards for Granting Permits
335-3-14-.04 Air Permits Authorizing Construction in Clean Air Areas [Prevention of Significant Deterioration Permitting (PSD)]
335-3-14-.05 Air Permits Authorizing Construction in or Near Non-Attainment Areas
335-3-14-.06 Requirements for Control Technology [Determinations for Major Sources in Accordance with Clean Air Act Section 112 (g)]

335-3-14-.01 General Provisions.

(1) Air Permit.

(a) Any person building, erecting, altering, or replacing any article, machine, equipment, or other contrivance, the use of which may cause the issuance of or an increase in the issuance of air contaminants or the use of which may eliminate or reduce or control the issuance of air contaminants, shall submit an application for an Air Permit at least 10 days prior to construction.

(b) Before any article, machine, equipment, or other contrivance described in subparagraph (a) of this paragraph may be operated or used, authorization shall be obtained from the Director in the form of an Air Permit. No Permit shall be granted for any article, machine, equipment or contrivance described in subparagraph (a) of this paragraph, constructed or installed without notification as required by subparagraph (a) of this paragraph, until the information required is presented to the Director and such article, machine, equipment or contrivance is altered, if necessary, and made to conform to the standards established by the Department.

(c) Any article, machine, equipment, or other contrivance described in subparagraph (a) of this paragraph which is presently operating (or which is not presently operating but which is capable of being operated) without an Air Permit may continue to operate (or may restart) only if its owner or operator obtains an Air Permit prior to a date to be set by the Director (or prior to restarting).

(d) Display of Air Permit. A person who has been granted an Air Permit for any article, machine, equipment, or other contrivance shall keep such permit under file or on display at all times at the site where the article, machine, equipment, or other contrivance is located and will make such a permit readily available for

inspection by any and all persons who may request to see it.

(e) The Director shall have the authority to decide cases where an article, machine, equipment, or other contrivance is not clearly subject to nor exempt from the application of this rule. In addition, the Director may rule that a particular article, machine, equipment, or other contrivance is subject to the application of this rule even though it is exempt from the system according to subparagraph (a) of this paragraph and paragraph (5) of this rule. The operator or builder of such an article, machine, equipment, or other contrivance may appeal the Director's classification to the Commission, which shall overrule the Director only if it is shown that he acted arbitrarily and contrary to the purposes of the Act.

(f) Upon completion of construction by a new facility, the Director shall, within a reasonable period of time, dispatch an inspector to the facility in question. If the inspector determines that the facility has been constructed according to the specifications as set forth under the Air Permit or that any changes to the facility would reduce or affect to an insubstantial degree that quantity of air contaminants emitted by the facility, and if a reviewing officer of the Division agrees with this conclusion, then the Director shall authorize initial operation of the facility until an official inspection of the facility under actual operating conditions can be made and the results reviewed or until the Air Permit is suspended or revoked by the Director. The Director may authorize initial operation of the facility without an inspection if upon completion of the construction, an owner or operator familiar with the application for an Air Permit submits a letter to the Director, testifying that the construction under application has been completed and is in accordance with the specification as set down in the Air Permit. The Director is empowered to reject that testimony if the Director decides that the owner or operator's qualifications are insufficient to allow him to accurately and completely assess the equipment in question. An owner or operator may appeal any such judgment to the Commission.

(g) The Director may issue an Air Permit subject to conditions which will bring the operation of any article, machine, equipment, or other contrivance within the standards of rule 335-3-14-.03(1) in which case the conditions shall be specified in writing. Commencing construction or operation under such an Air Permit shall be deemed acceptance of all the conditions specified. The Director shall issue an Air Permit with revised conditions upon receipt of a new application, if the applicant demonstrates that the article, machine, equipment, or other contrivance can operate within the standards of rule 335-3-14-.03(1) under the revised conditions.

(h) Reserved.

(i) Reserved.

(j) Reserved.

(k) An existing facility which holds a Synthetic Minor Operating Permit issued under chapter 335-3-15 or an Operating Permit issued under chapter 335-3-16 is exempt from the requirements of this chapter provided that:

1. the Synthetic Minor Operating Permit is modified as required by chapter 335-3-15 prior to the initial operation of any new or modified sources, or

2. the Operating Permit is modified as required by chapter 335-3-16 and any modifications are not subject to the requirements of rule 335-3-14-.04, or

3. for a modification which is subject to the requirements of rule 335-3-14-.04, the Operating Permit is issued prior to commencement of construction of the modification, and the Operating Permit fulfills all requirements of rule 335-3-14-.04, or

4. the Operating Permit is modified as required by chapter 335-3-16 and any modifications are not subject to the requirements of rule 335-3-14-.05, or

5. for a modification which is subject to the requirements of rule 335-3-14-.05, the Operating Permit is issued prior to commencement of construction of the modification, and the Operating Permit fulfills all requirements of rule 335-3-14-.05.

(2) Provision of Sampling and Testing Facilities. A person operating or using any article, machine, equipment or other contrivance for which these rules and regulations require a permit shall provide and maintain such sampling and testing facilities as specified in the Air Permit.

(3) The holder of a Permit under this rule shall comply with conditions contained in such Permit as well as all applicable provisions of these rules and regulations.

(4) Transfer. An Air Permit shall not be transferable whether by operation of law or otherwise, either from one location to another, from one piece of equipment to another, or from one person to another.

(5) Exemptions. From time to time the Director may specify certain classes or sizes of articles, machines, equipment, or other contrivances which would normally be subject to the requirements to apply for an Air Permit as being exempt from the requirement to apply for such permits. Exempt sources are subject in every other way to these rules and regulations.

(6) Delegation of Air Permit requirements to Local Air Pollution Control Programs.

(a) Local air pollution control programs may receive delegation of authority from the Director to administer the general Air Permit requirements of paragraph (1) of this rule within their jurisdiction provided the local air pollution control program:

1. adopts regulations insuring applicants are required to satisfy the same requirements as contained in the Department's regulations; an

2. adopts regulations which require the Director to be provided with an opportunity to review the permit application, the analysis of the permit, and proposed permit conditions at least 10 days prior to issuance of an Air Permit.

(b) Local air pollution control programs may receive delegation of authority from the Director to administer the Air Permit requirements of rules 335-3-14-.05 and 335-3-14-.04 within their jurisdiction provided:

1. the requirements of subparagraph (a)1. of this paragraph are met; and

2. the local air pollution control program demonstrates that it has the necessary manpower and technical expertise to implement the requirements of said regulations; and

3. the local air pollution control program adopts regulations which require that the local air pollution control program shall provide the Director a copy of preliminary determinations and public comment notices for all permits issued pursuant to rules 335-3-14-.05 and 335-3-14-.04 before the notice is issued.

(c) If the Director of ADEM determines that local program procedures for implementing all the portions of rules 335-3-14-.01(1), 335-3-14-.04, and 335-3-14-.05 are inadequate, or are not being effectively carried out, any authority delegated to the local programs to administer rules 335-3-14-.01(1), 335-3-14-.04, and 335-3-14-.05 may be revoked in whole or in part. Any such revocation shall be effective as of the date specified in a Notice of Revocation to the local air pollution control program.

(d) The Director reserves the authority contained in rule 335-3-14-.02(4), to revoke any Air Permit issued pursuant to this rule.

(e) Any Air Permit issued by a local air pollution control program, including all conditions contained therein, is enforceable by the ADEM.

(7) Public Participation.

(a) Notice shall be given under the following circumstances:

1. Construction at a Greenfield Site.

(i) For the purposes of this paragraph, a "Greenfield Site" shall mean a new development or the initial operation of a new facility.

2. The Director, at his discretion, may require Public Notification for any application received in accordance with subparagraph (1)(a) of this rule.

(b) Notices issued in accordance with rule 335-3-14-.01(7) (a) shall be posted for the duration of the public comment period on the Department's web site, and shall include:

1. A notice of availability of the proposed permit for public comment;

2. A link to the proposed permit; and,

3. Information on how to access the administrative record for the proposed permit on the Department's web site.

(c) Notices issued in accordance with rule 335-3-14-.01(7) (a) shall also be transmitted to a list developed by the Department for persons desiring notice of permit action, including persons who have requested in writing to be on such a list.

(d) Public comments will be received by the Department for a period of 15 days following the posting of the public notice.

(e) Public Notice will be held in accordance with the requirements of rules 335-3-14-.04, 335-3-14-.05, or 335-3-14-.06 for any application which is subject to the requirements of rules 335-3-14-.04, 335-3-14-.05, or 335-3-14-.06, respectively.

(f) Construction of any article, machine, equipment, or other contrivance as described in subparagraph (1)(a) of this rule shall not commence until after an Air Permit is issued if a public notice is required under this rule.

Author: James W. Cooper and John E. Daniel.
Statutory Authority: Code of Alabama 1975, §§22-28-14, 22-22A-5, 22-22A-6, and 22-22A-8.
History: Effective Date: January 18, 1972.
Amended: April 3, 1979; February 13, 1985; December 28, 1993; November 21, 1996; March 27, 1998; June 2, 2017.

335-3-14-.02 Permit Procedure.

(1) Applications. Every application for an Air Permit required under rule 335-3-14-.01(1) shall be filed in the manner and form prescribed by the Director and shall give all the information necessary to enable the Director to make the determination required by rule 335-3-14-.03.

(a) Cancellation of Applications. An Air Permit authorizing construction shall expire and the application shall be canceled two years from the date of issuance of the Air Permit if the construction has not begun.

(2) Action on Application. The Director shall act, within a reasonable time, on an application for an Air Permit and shall notify the applicant in writing of its approval, conditional approval, or denial.

(3) Denial of Application. In the event of a denial of an Air Permit, the Director shall notify the applicant in writing of the reason therefor. Service of this notification may be made in person or by mail, and such service may be proved by the written acknowledgment of the persons served or affidavit of the person making the service. The Director shall not accept a further application unless the applicant has complied with the objections specified by the Director as

its reasons for denial of the Air Permit.

(4) Revocation of Air Permits. Any Air Permit granted by the Director may be revoked for any of the following causes:

(a) failure to comply with any conditions of the permit;

(b) failure to notify the Director prior to intended use or operation of any article, machine, equipment, or other contrivance described in rule 335-3-14-.01(1)(a);

(c) failure to establish and maintain such records, make such reports, install, use and maintain such monitoring equipment or methods; and sample such emissions in accordance with such methods at such locations, intervals and procedures as the Director may prescribe in accordance with rule 335-3-1-.04(2);

(d) failure to comply with any provisions of any Departmental administrative order issued concerning the permitted source or facility.

(e) failure to allow employees of the Department upon proper identification:

1. to enter any premises where any article, machine, equipment, or other contrivance described in rule 335-3-14-.01(1) is located or in which any records are required to be kept under provisions of the permit and/or the rules and regulations;

2. to have access to and copy any records required to be kept under provisions of the permit and/or the rules and regulations;

3. to inspect any monitoring equipment or practices being maintained pursuant to the permit and/or rules and regulations; and

4. to have access to and sample any discharge of air contaminants resulting directly or indirectly from the operation of any article, machine, equipment, or other contrivance described in rule 335-3-14-.01(1).

(f) failure to comply with the rules and regulations of the Department.

(g) for any other cause, after a hearing which establishes, in the judgment of the Department, that continuance of the permit is not consistent with the purpose of the Alabama Air Pollution Control Act or regulations under it.

(5) Expiration of Air Permits. Air Permits shall expire immediately following:

(a) the issuance of a Synthetic Minor Operating Permit required by chapter 335-3-15 or an Operating Permit required by chapter 335-3-16 which pertains to the article, machine, equipment, or other contrivance regulated by the Air Permit.

(b) the final denial of a Synthetic Minor Operating Permit required by

chapter 335-3-15 or an Operating Permit required by chapter 335-3-16 which pertains to the article, machine equipment, or other contrivance regulated by the Air Permit.

(c) the failure of a facility to apply for a Synthetic Minor Operating Permit or modification to an existing Synthetic Minor Operating Permit as required by chapter 335-3-15 or the failure of a facility to apply for an Operating Permit or modification to an existing Operating Permit as required by chapter 335-3-16.

Author: James W. Cooper and John E. Daniel; Ronald W. Gore.
Statutory Authority: Code of Alabama 1975, §§22-28-14, 22-22A-5, 22-22A-6, and 22-22A-8.
History: Effective Date: January 18, 1972.
Amended: April 3, 1979; February 13, 1985, December 28, 1993; November 21, 1996; September 7, 2000; July 11, 2006.

335-3-14-.03 Standards for Granting Permits.

(1) General Standards.

(a) The Director shall deny a permit if the applicant does not show that every article, machine, equipment, or other contrivance, the use of which may cause the issuance of air contaminants, is so designed, controlled, or equipped with such air pollution control equipment, that it may be expected to operate without emitting or without causing to be emitted air contaminants in violation of these rules and regulations.

(b) The Director shall deny a permit if the applicant does not present, in writing, a plan whereby the emission of air contaminants by every article, machine, equipment, or other contrivance described in the permit application, will be reduced during periods of an Air Pollution Alert, Air Pollution Warning, and Air Pollution Emergency in accordance with the provisions of chapter 335-3-2**,** where such a plan is required.

(c) Before an Air Permit is granted, the Director may require the applicant to provide and maintain such facilities as are necessary for sampling and testing purposes in order to secure information that will disclose the nature, extent, quantity or degree of air contaminants discharged into the atmosphere from the article, machine, equipment, or other contrivance described in the Air Permit. In the event of such a requirement, the Director shall notify the applicant in writing of the required size, number, and location of the sampling platform; the access to the sampling platform; and the utilities for operating and sampling and testing equipment.

(d) The Director may also require the applicant to install, use, and maintain such monitoring equipment or methods; sample such emissions in accordance with such methods, at such locations, intervals, and procedures as may be specified; and provide such information as the Director may require.

(e) Before acting on an application for an Air Permit, the Director may require the applicant to furnish further information or further plans or specifications.

(f) If the Director finds that the article, machine, or other contrivance has been constructed not in accordance with the Air Permit, and if the changes noted are of a substantial nature in that the amount of air contaminants emitted by the article, machine, equipment, or other contrivance may be increased, or in that the effect is unknown, then he shall revoke the Air Permit. The Director shall not accept any further application for an Air Permit until the article, machine, equipment, or other contrivance has been reconstructed in accordance with said Air Permit or until the applicant has proven to the satisfaction of the Director that the change will not cause an increase in the emission of air contaminants.

(g) The Director shall deny an Air Permit where he determines that the construction and operation of such source will interfere with attaining or maintaining any primary or secondary standard established by rule 335-3-1-.03(1). A new source or modification will be considered to interfere with attaining or maintaining a standard when such source or modification would, at a minimum, exceed the following significance levels at any locality that does not or would not meet the NAAQS:

Pollutant	**Averaging Time**				
	Annual	**24 hours**	**8 hours**	**3 hours**	**1 hour**
SO_2	1.0 μg/m³	5 μg/m³		25 μg/m³	
PM_{10}	1.0 μg/m³	5 μg/m³			
$PM_{2.5}$	0.3 μg/m³	1.2 μg/m³			
NO_2	1.0 μg/m³				
CO			0.5 mg/m³		2 mg/m³

1. A proposed major source or major modification subject to this Paragraph may reduce the impact of its emissions upon air quality by obtaining sufficient emissions reductions to, at a minimum, compensate for its adverse ambient impact where this impact would otherwise cause or contribute to a violation of any national ambient air quality standard or exceed the significance levels of subparagraph (g)1. of this paragraph above. In the absence of such emission reductions, the Director shall deny the proposed construction.

2. The requirements of subparagraph (g) of this paragraph shall not apply to a major stationary source or major modification with respect to a particular pollutant if the owner or operator demonstrates that, as to that pollutant, the source or modification is located in an area designated as nonattainment pursuant

to Section 107 of the federal Clean Air Act.

(h) Exceptions to violations of emissions limits.

1. The Director may, in the Air Permit, exempt on a case by case basis any exceedances of emission limits which cannot reasonably be avoided, such as during periods of start-up, shut-down or load change.

2. Emergency provision.

(i) An "emergency" means any situation arising from sudden and reasonably unforeseeable events beyond the control of the facility, including acts of God, which situation require immediate corrective action to restore normal operation, and that causes the facility to exceed a technology based emission limitation under the permit, due to unavoidable increases in emissions attributable to the emergency. An emergency shall not include noncompliance to the extent caused by improperly designed equipment, lack of preventative maintenance, careless or improper operation, or operator error.

(ii) Exceedances of emission limitations during emergencies (as defined above) at a facility may be exempted as being violations provided that:

(I) the permittee can identify the cause(s) of the emergency;

(II) the permitted facility was at the time being properly operated;

(III) during the period of the emergency, the permittee took all reasonable steps to minimize levels of emissions that exceeded the emission standards, or other requirements of the permit;

(IV) the permittee submitted notice of the emergency to the Department within 2 working days of the time when the emissions limitations were exceeded due to the emergency; and

(V) the permittee immediately documented the emergency exceedance in an "Emergency Log", which shall be maintained for 5 years in a form suitable for inspection upon request by a representative of the Department.

(iii) The Director shall be the sole determiner of whether an emergency has occurred.

(iv) This provision is in addition to any emergency or upset provision contained in any applicable requirement.

(i) A determination may be made by the Director to deny a permit application if the applicant operates other permitted facilities or sources within the state which are in substantial noncompliance as determined by the Director, until such noncompliance is corrected or if the Director determines that a permit that results in compliance with applicable air pollution control standards could not be issued, or if issued, could not be complied with.

(2) Stack Heights.

(a) Definitions. For purposes of this paragraph, the following words and phrases, unless a different meaning is plainly required by the context, shall have the following meanings:

1. "Emission limitation" and "emission standard" mean a requirement, established by ADEM or the EPA Administrator, which limits the quantity, rate, or concentration of emissions of air pollutants on a continuous basis, including any requirements which limit the level of opacity, prescribe equipment, set fuel specifications, or prescribe operation or maintenance procedures for a source to assure continuous emission reduction.

2. "Stack" means any point in a source designed to emit solids, liquids, or gases into the air, including a pipe or duct but not including flares.

3. "A stack in existence" means that the owner or operator had (1) begun, or caused to begin, a continuous program of physical on-site construction of the stack or (2) entered into binding agreements or contractual obligations, which could not be canceled or modified without substantial loss to the owner or operator, to undertake a program of construction of the stack to be completed in a reasonable time.

4. "Dispersion technique" means any technique which attempts to affect the concentration of a pollutant in the ambient air by:

(i) Using that portion of a stack which exceeds good engineering practice stack height;

(ii) Varying the rate of emission of a pollutant according to atmospheric conditions or ambient concentrations of that pollutant; or

(iii) Increasing final exhaust gas plume rise by manipulating source-process parameters, exhaust gas parameters, stack parameters, or combining exhaust gases from several existing stacks into one stack; or other selective handling of exhaust gas streams so as to increase the exhaust gas plume rise.

(iv) The preceding sentence does not include:

(I) The reheating of a gas stream, following use of a pollution control system, for the purpose of returning the gas to the temperature at which it was originally discharged from the facility generating the gas stream;

(II) The merging of exhaust gas streams where:

I. The source owner or operator demonstrates that the facility was originally designed and constructed with such merged gas streams;

II. After July 8, 1985, such merging is part of a change in operation at the facility that includes the installation of pollution controls and is accompanied by a

net reduction in the allowable emissions of a pollutant. This exclusion from the definition of "dispersion techniques" shall apply only to the emission limitation for the pollutant affected by such change in operation; or

III. Before July 8, 1985, such merging was part of a change in operation at the facility that included the installation of emissions control equipment or was carried out for sound economic or engineering reasons. Where there was an increase in the emission limitation or, in the event that no emission limitation was in existence prior to the merging, an increase in the quantity of pollutants actually emitted prior to the merging, the Director shall presume that merging was significantly motivated by an intent to gain emissions credit for greater dispersion. Absent a demonstration by the source owner or operator that merging was not significantly motivated by such intent, the Director shall deny credit for the effects of such merging in calculating the allowable emissions for the source:

(III) Smoke management in agricultural or silvicultural prescribed burning programs:

(IV) Episodic restrictions on residential woodburning and open burning; or

(V) Techniques under subparagraph (a)4.(iii) of this paragraph which increase final exhaust gas plume rise where the resulting allowable emissions of sulfur dioxide from the facility do not exceed 5,000 tons per year.

5. "Good engineering practice" (GEP) stack height means the greater of:

(i) 65 meters measured from the ground-level elevation at the base of the stack:

(ii) For stacks in existence on January 12, 1979, and for which the owner or operator had obtained all applicable permits or approvals required under 40 CFR 51 and 52, provided the owner or operator produces evidence that this equation was actually relied on in establishing an emission limitation;

$$H_g = 2.5H$$

(I) For all other stacks,

$$H_g = H + 1.5L$$

where:

H_g = good engineering practice stack height measured from the ground-level elevation at the base of the stack,

H = height of nearby structure(s) measured from the ground-level elevation at the base of the stack,

L = lesser dimension, height or projected width of nearby

structure(s),

provided that the Director may require the use of a field study or fluid model to verify GEP stack height for the source; or

(iii) The height demonstrated by a fluid model or a field study approved by the Director, which ensures that the emissions from a stack do not result in excessive concentrations of any air pollutant as a result of atmospheric downwash, wakes, or eddy effects created by the source itself, nearby structures, or nearby terrain features.

6. "Nearby" as used in subparagraph (a)5. of this paragraph is defined for a specific structure or terrain feature and

(i) for purposes of applying the formulas provided in subparagraph (a)5.(ii) of this paragraph means that distance up to five times the lesser of the height or the width dimension of a structure, but not greater than 0.8 km (½ mile); and

(ii) for conducting demonstrations under subparagraph (a)5.(iii) of this paragraph means not greater than 0.8 km (½ mile), except that the portion of a terrain feature may be considered to be nearby which falls within a distance of up to 10 times the maximum height (h_t) of the feature, not to exceed 2 miles if such feature achieves a height (h_t) 0.8 km from the stack that is at least 40 percent of the GEP stack height determined by the formula provided in subparagraph (a)5.(ii)(I) of this paragraph or 26 meters, whichever is greater, as measured from the ground-level elevation at the base of the stack. The height of the structure or terrain feature is measured from the ground-level elevation at the base of the stack.

7. "Excessive concentration" is defined for the purpose of determining GEP stack height under subparagraph (a)5.(iii) of this paragraph and means:

(i) for sources seeking credit for stack height exceeding that established under subparagraph (a)5.(ii) of this paragraph, a maximum ground-level concentration due to emissions from a stack due in whole or part to downwash, wakes, and eddy effects produced by nearby structures or nearby terrain features which individually is at least 40 percent in excess of the maximum concentration experienced in the absence of such downwash, wakes, or eddy effects and which contributes to a total concentration due to emissions from all sources that is greater than a NAAQS. For sources subject to the PSD program (rule 335-3-14-.04), an excessive concentration alternatively means a maximum ground-level concentration due to emissions from a stack due in whole or part to downwash, wakes, or eddy effects produced by nearby structures or nearby terrain features which individually is at least 40 percent in excess of the maximum concentration experienced in the absence of such downwash, wakes, or eddy effects and greater than a prevention of significant deterioration increment. The allowable emissions rate to be used in making demonstrations under this rule shall be prescribed by the new source performance standard that is applicable to the source category unless the owner or operator demonstrates that this emission rate is infeasible. Where such demonstrations are approved by the Director, an

alternative emission rate shall be established in consultation with the source owner or operator;

(ii) for sources seeking credit after October 11, 1983, for increases in existing stack heights up to the heights established under subparagraph (a)5.(ii) of this paragraph, either:

(I) a maximum ground-level concentration due in whole or part to downwash, wakes, or eddy effects as provided in subparagraph (a)7.(i) of this paragraph, except that the emission rate specified elsewhere in these regulations (or, in the absence of such a limit, the actual emission rate) shall be used, or

(II) the actual presence of a local nuisance caused by the existing stack, as determined by the Director; and

(iii) for sources seeking credit after January 12, 1979, for a stack height determined under subparagraph (a)5.(ii) of this paragraph where the Director requires that use of a field study or fluid model to verify GEP stack height, for sources seeking stack height credit after November 9, 1984, based on the aerodynamic influence of cooling towers, and for sources seeking stack height credit after December 31, 1970, based on the aerodynamic influence of structures not adequately represented by the equations in subparagraph (a)5.(ii) of this paragraph, a maximum ground-level concentration due in whole or part to downwash, wakes, or eddy effects that is at least 40 percent in excess of the maximum concentration experienced in the absence of such downwash, wakes, or eddy effects.

(b) Before acting on any Air Permit, the Director shall require that the degree of emission limitation required of any source for control of any air pollutants shall not be affected by so much of any source's stack height that exceeds GEP or by any other dispersion technique, except as provided in subparagraph (c) of this paragraph below.

(c) The provisions of subparagraph (b) above shall not apply to stack heights in existence, or dispersion techniques implemented, prior to December 31, 1970, except where pollutants are being emitted from such stacks or using such dispersion techniques by sources, as defined in Section 111(a)(3) of the Clean Air Act, which were constructed, or reconstructed or for which major modifications, as defined pursuant to rules 335-3-14-.05(2)(d) and 335-3-14-.04(2)(b), were carried out after December 31, 1970.

(d) If any existing source, after appropriate application of the preceding limitations and provisions, is found to exceed or potentially exceed a NAAQS or PSD increment, when operating within previously established emission limitations, the emissions limitations applicable to that source shall be modified so as to eliminate and prevent the exceedance.

(e) If any new source or source modification, after appropriate application of the preceding limitations and provisions, is predicted to exceed a NAAQS or PSD increment when evaluated under emission limitations consistent with other

applicable rules and regulations, the emission limitations considered shall be deemed inadequate and different emission limits, based on air quality considerations, shall be made applicable.

(f) If any source provides a field study or fluid modeling demonstration proposing a GEP stack height greater than that allowed by subparagraphs (a)5.(i) and (a)5.(ii) of this paragraph, then the public will be notified of the availability of the study and provided the opportunity for a public hearing before any new or revised emission limitation or permit is approved.

(g) The actual stack height used or proposed by a source shall not be restricted in any manner by requirements of this paragraph.

Author: James W. Cooper and John E. Daniel; Ronald W. Gore.
Statutory Authority: Code of Alabama 1975, §§22-28-14, 22-22A-5, 22-22A-6, and 22-22A-8.
History: Effective Date: January 18, 1972.
Amended: April 3, 1979; February 13, 1980; March 24, 1981; March 23, 1982; February 13, 1985; November 13, 1985; September 18, 1986; June 9, 1987; May 4, 1988; September 21, 1989; November 1, 1990; October 30, 1992; December 28, 1993; November 21, 1996; September 7, 2000; July 11, 2006; May 23, 2011.

335-3-14-.04 Air Permits Authorizing Construction in Clean Air Areas [Prevention of Significant Deterioration Permitting (PSD)]

(1) Applicability.

(a) The requirements of this rule apply to the construction of any new major stationary source (as defined in subparagraph (2)(a) of this rule) or any project at an existing major stationary source in an area designated as attainment or unclassifiable under sections 107(d)(1)(A)(ii) or (iii) of the Clean Air Act.

(b) The requirements of paragraphs (9) through (17) of this rule apply to the construction of any new major stationary source or the major modification of any existing major stationary source, except as this rule otherwise provides.

(c) No new major stationary source or major modification to which the requirements of paragraphs (9) through (17)(c) of this rule apply shall begin construction without a permit that states that the major stationary source or major modification will meet those requirements.

(d) Except as otherwise provided in subparagraph (1)(j) of this rule, and consistent with the definition of major modification contained in subparagraph (2)(b) of this rule, a project is a major modification for a regulated NSR pollutant only if it causes two types of emissions increases – a significant emissions increase [as defined in subparagraph (2)(mm) of this rule], and a significant net emissions increase [as defined in subparagraphs (2)(c) and (2)(w) of this rule].

(e) Before beginning actual construction, the procedure for calculating

whether a significant emissions increase will occur depends upon the type of emissions units being modified, according to subparagraphs (1)(f) through (i) of this rule. The procedure for calculating whether a significant net emissions increase will occur at the major stationary source is contained in the definition in subparagraph (2)(c) of this rule. Regardless of any such preconstruction projections, a major modification can result only if the project causes a significant emissions increase and a significant net emissions increase.

(f) Actual-to-projected-actual applicability test for projects that only involve existing emissions units. A significant emissions increase of a regulated NSR pollutant is projected to occur if the sum of the difference(s) between the projected actual emissions [as defined in subparagraph (2)(nn) of this rule] and the baseline actual emissions [as defined in subparagraphs (2)(uu)1. and 2. of this rule], for each existing emissions unit, equals or exceeds the significant rate for that pollutant [as defined in subparagraph (2)(w) of this rule].

(g) Actual-to-potential test for projects that only involve construction of a new emissions unit(s). A significant emissions increase of a regulated NSR pollutant is projected to occur if the sum of the difference between the potential to emit [as defined in subparagraph (2)(d) of this rule] from each new emissions unit following completion of the project and the baseline actual emissions [as defined in subparagraph (2)(uu)3. of this rule] of these units before the project equals or exceeds the significant rate for that pollutant [as defined in subparagraph (2)(w) of this rule].

(h) Actual-to-potential test for projects that only involve existing emissions units. A significant emissions increase of a regulated NSR pollutant is projected to occur if the sum of the difference(s) between the potential to emit [as defined in subparagraph (2)(d) of this rule] and the actual emissions [as defined in subparagraph (2)(u) of this rule], for each existing emissions unit, equals or exceeds the significant rate for that pollutant [as defined in subparagraph (2)(w) of this rule].

(i) Hybrid test for projects that involve multiple types of emissions units. A significant emissions increase of a regulated NSR pollutant is projected to occur if the sum of the emissions increases for each emissions unit, using the method specified in subparagraphs (1)(f) through (h) of this rule as applicable with respect to each emissions unit, for each type of emissions unit equals or exceeds the significant rate for that pollutant [as defined in subparagraph (2)(w) of this rule].

(j) Any major stationary source subject to a plantwide applicability limit (PAL), as defined in subparagraph (23)(b)5. of this rule, for a regulated NSR pollutant shall comply with the requirements under paragraph (23) of this rule.

(k) Greenhouse gases (GHGs)

1. GHGs, as defined in Subparagraph (2)(*zz*) of this Rule, shall not be utilized in determining if a source is a major stationary source, as defined in Subparagraph (2)(a) of this Rule, or in determining if a modification is a major modification, as defined in Subparagraph (2)(b) of this Rule.

2. GHGs shall only be subject to the requirements of this Rule if:

(i) A new major stationary source or major modification causes a significant emissions increase of GHGs, as defined in subparagraph (2)(mm) of this rule, and a significant net emissions increase of GHGs, as defined in subparagraphs (2)(c) and (2)(w) of this rule, and

(ii) The new major stationary source or major modification is required to obtain a permit subject to the requirements of this Rule as a result of emissions of regulated NSR pollutants other than GHGs.

Reserved.

(2) Definitions. For the purposes of this rule only, the following terms will have meanings ascribed in this paragraph:

(a) "Major Stationary Source" shall mean:

1. Any of the following stationary sources [see subparagraph (e) of this paragraph] of air pollutants which emits, or has the potential to emit [see subparagraph (d) of this paragraph], 100 tons per year or more of any regulated NSR pollutant:

- carbon black plants (furnace process);
- charcoal production plants;
- chemical process plants;
- coal cleaning plants (with thermal dryers);
- coke oven batteries;
- fossil fuel-fired steam electric plants of more than 250 million British thermal units per hour heat input;
- fossil fuel boilers (or combinations thereof) totaling more than 250 million British thermal units per hour heat input;
- fuel conversion plants;
- glass fiber processing plants; and
- hydrofluoric acid plants;
- sulfuric acid plants;
- nitric aid plants;
- iron and steel mill plants;
- kraft pulp mills;
- lime plants;
- municipal incinerators capable of charging more than 250 tons of refuse per day;
    - petroleum refineries;
    - petroleum storage and transfer units with a total storage capacity

exceeding 300,000 barrels;

- phosphate rock processing plants;
- portland cement plants;
- primary aluminum ore reduction plants;
- primary copper smelters;
- primary lead smelters;
- primary zinc smelters;
- secondary metal production plants;
- sintering plants;
- sulfur recovery plants;
- taconite ore processing plants;

(i) Notwithstanding the stationary source size specified in subparagraph (a)1. of this paragraph, any stationary source which emits, or has the potential to emit, 250 tons per year or more of any regulated NSR pollutant;

(ii) Any physical change that would occur at a stationary source not otherwise qualifying under this rule as a major stationary source, if the changes would constitute a major stationary source by itself.

2. A stationary source that is considered major for VOC or NO_X shall be considered major for ozone.

(b) "Major Modification" shall mean any physical change in or change in the method of operation of a major stationary source that would result in a significant [see subparagraph (w) of this paragraph] net emissions increase [see subparagraph (c) of this paragraph] of any regulated NSR pollutant.

1. Any net emissions increase that is significant for VOC or NO_X shall be considered significant for ozone.

2. Any net emissions increase that is significant for SO_2 or NO_X shall be considered significant for $PM_{2.5}$.

3. A physical change or change in the method of operation shall not include:

(i) Routine maintenance, repair and replacement;

(ii) Use of an alternative fuel or raw material by reason of an order under Sections 2(a) and (b) of the Energy Supply and Environmental Coordination Act of 1974 (P.L. 93-319, 15 U.S.C. 791 note) or any superseding legislation, or by reason of a natural gas curtailment plan pursuant to the Federal Power Act (June 10, 1920, P.L. 280, 16 U.S.C. 791a);

(iii) Use of an alternative fuel by reason of an order or rule under Section

125 of the CAA;

(iv) Use of an alternative fuel at a steam generating unit to the extent that the fuel is generated from municipal solid waste;

(v) Use of an alternative fuel or raw material by a stationary source which:

(I) The source was capable of accommodating before January 6, 1975, unless such change would be prohibited under any enforceable permit condition which was established after January 6, 1975.

(II) The source is approved to use under any permit issued under the Federal Prevention of Significant Deterioration ("PSD") regulations (40 CFR 52.21) or under regulations of this rule;

(vi) An increase in the hours of operation or in the production rate, unless such change would be prohibited under any enforceable permit condition which was established after January 6, 1975.

(vii) Any change in ownership at a stationary source.

(viii) Reserved.

(ix) The installation, operation, cessation, or removal of a temporary clean coal technology demonstration project, provided that the project complies with requirements necessary to attain and maintain the national ambient air quality standards during the project and after it is terminated.

(x) The installation or operation of a permanent clean coal technology demonstration project that constitutes repowering, provided that the project does not result in an increase in the potential to emit of any regulated NSR pollutant emitted by the unit. This exemption shall apply on a pollutant-by-pollutant basis.

4. This definition shall not apply with respect to a particular regulated NSR pollutant when the major stationary source is complying with the requirements under paragraph (23) of this rule for a PAL for that pollutant. Instead, the definition at subparagraph (23)(b)8. of this rule shall apply.

(c) "Net Emissions Increase" shall mean with respect to any regulated NSR pollutant, the amount by which the sum of the following exceeds zero:

1. Any increase in emissions as calculated pursuant to subparagraph (1)(e) through (i) of this rule from a particular physical change or change in method of operation at a stationary source; and

2. Any other increases and decreases in actual emissions at the source that are contemporaneous with the particular change and are otherwise creditable. Baseline actual emissions for calculating increases and decreases under this subparagraph shall be determined as provided in subparagraph

(2)(uu) of this rule, except that subparagraphs (2)(uu)1.(iii) and (2)(uu)2.(iv) of this rule shall not apply.

(i) An increase or decrease in actual emissions is contemporaneous with the increase from the particular change only if it occurs between:

(I) The date five (5) years before construction [see subparagraph (h) of this paragraph] on the particular change commences [see subparagraph (i) of this paragraph]; and

(II) The date that the increase from the particular change occurs.

(ii) An increase or decrease in actual emissions is creditable only if the Director has not relied on it in issuing a permit for the source under this rule, which is in effect when the increase in actual emissions from the particular change occurs.

(iii) An increase or decrease in actual emissions of sulfur dioxide, particulate matter, or nitrogen oxides which occurs before the applicable minor source baseline date [see subparagraph (n)2. of this paragraph] is creditable only if it is required to be considered in calculating the amount of maximum allowable increases remaining available. With respect to particulate matter, only PM_{10} and $PM_{2.5}$ emissions can be used to evaluate the net emissions increase for PM_{10}. Only $PM_{2.5}$ emissions can be used to evaluate the net emissions increase for $PM_{2.5}$.

(iv) An increase in actual emissions is creditable only to the extent that the new level of actual emissions exceeds the old level.

(v) A decrease in actual emissions is creditable only to the extent that:

(I) The old level of actual emissions or the old level of allowable emissions [see subparagraph (p) of this paragraph], whichever is lower, exceeds the new level of actual emissions;

(II) It is enforceable [see subparagraph (q) of this paragraph], at and after the time that actual construction on the particular change begins; and

(III) It has approximately the same qualitative significance for public health and welfare as that attributed to the increase from the particular change.

(vi) An increase that results from a physical change at a source occurs when the emissions unit on which construction occurred becomes operational and begins to emit a particular pollutant. Any replacement unit that requires shakedown becomes operational only after a reasonable shakedown period, not to exceed 180 days.

(d) "Potential to Emit" shall mean the maximum capacity of a stationary source to emit a pollutant under its physical and operational design. Any physical or operational limitation on the capacity of the source to emit a pollutant, including air pollution control equipment and restrictions on hours of operation or on the type or amount of material combusted, stored, or processed, shall be treated

as part of its design if the limitation or the effect it would have on emissions is enforceable. Secondary emissions [see paragraph 335-3-14-.04(2)(r)] do not count in determining the potential to emit of a stationary source.

(e) "Stationary Source" shall mean any building, structure, facility, or installation which emits or may emit a regulated NSR pollutant.

(f) "Building, Structure, Facility, or Installation" shall mean all of the pollutant-emitting activities which belong to the same industrial grouping, are located on one or more contiguous or adjacent properties, and are under the control of the same person (or persons under common control). Pollutant-emitting activities shall be considered as part of the same industrial grouping if they belong to the same "Major Group" (i.e., all have the same two digit code) as described in the Standard Industrial Classification Manual.

(g) "Emissions Unit" shall mean any part of a stationary source which emits or would have the potential to emit any regulated NSR pollutant including an electric utility steam generating unit as defined in subparagraph (2)(vv) of this rule. For purposes of this rule, there are two types of emissions units as described in subparagraphs (2)(g)1. and 2. of this rule.

1. A new emissions unit is any emissions unit that is (or will be) newly constructed and that has existed for less than 2 years from the date such emissions unit first operated.

2. An existing emissions unit is any emissions unit that does not meet the requirements in subparagraph (2)(g)1. of this rule. A replacement unit, as defined in subparagraph (bbb) of this rule, is an existing emissions unit.

(h) "Construction" shall mean any physical change or change in the method of operation (including fabrication, erection, installation, demolition, or modification of an emissions unit) which would result in a change in emissions.

(i) "Commence" as applied to construction of a major stationary source or major modification shall mean that the owner or operator has all necessary preconstruction approvals or permits [see subparagraph (j) of this paragraph] and either has:

1. Begun, or caused to begin, a continuous program of actual on-site construction [see subparagraph (k) of this paragraph] of the source, to be completed within a reasonable time; or

2. Entered into binding agreements or contractual obligations, which cannot be canceled or modified without substantial loss to the owner or operator, to undertake a program of actual construction of the source to be completed within a reasonable time.

(j) "Necessary Preconstruction Approvals or Permits" shall mean those permits or approvals required under Alabama air quality control laws and regulations which are part of the State Implementation Plan.

(k) "Begin Actual Construction" shall mean, in general, initiation of physical on-site construction activities on an emissions unit which are of a permanent nature. Such activities include, but are not limited to, installation of building supports and foundations, laying underground pipework and construction of permanent storage structures. With respect to a change in method of operations, this term refers to those on-site activities other than preparatory activities which mark the initiation of the change.

(l) "Best Available Control Technology (BACT)" shall mean an emissions limitation (including a visible emission standard) based on the maximum degree of reduction for each regulated NSR pollutant which would be emitted from any proposed major stationary source or major modification which the Director, on a case-by-case basis, taking into account energy, environmental, and economic impacts and other costs, determines is achievable for such source or modification through application of production processes or available methods, systems and techniques, including fuel cleaning or treatment or innovative fuel combustion techniques for control of such pollutant. In no event shall application of BACT result in emissions of any pollutant which would exceed the emissions allowed by any applicable standard under 40 CFR 60 and 61. If the Director determines that technological or economic limitations on the application of measurement methodology to a particular emissions unit would make the imposition of an emissions standard infeasible, a design, equipment, work practice, operational standard, or combination thereof may be prescribed instead to satisfy the requirement for the application of BACT. Such standard shall, to the degree possible, set forth the emissions reduction achievable by implementation of such design, equipment, work practice, or operation and shall provide for compliance by means which achieve equivalent results.

(m) "Baseline Concentration" shall mean that ambient concentration level which exists in the baseline area [see subparagraph (o) of this paragraph] at the time of the applicable minor source baseline date. A baseline concentration is determined for each pollutant for which a minor source baseline date is established and shall include:

1. The actual emissions, as defined in paragraph (2)(u) of this rule, representative of sources in existence on the applicable minor source baseline date, except as provided in subparagraph (m) 3. of this paragraph;

2. The allowable emissions of major stationary sources which commenced construction before the major source baseline date, but were not in operation by the applicable minor source baseline date.

3. The following will not be included in the baseline concentration and will affect the applicable maximum allowable increase(s):

(i) Actual emissions, as defined in paragraph (2)(u) of this rule, from any major stationary source on which construction commenced after the major source baseline date; and

(ii) Actual emissions increases and decreases, as defined in paragraph

(2)(u) of this rule, at any stationary source occurring after the minor source baseline date.

(n) "Major Source Baseline Date" means in the case of particulate matter less than 10 microns in diameter and sulfur dioxide, January 6, 1975; in the case of nitrogen dioxide, the major source baseline date is February 8, 1988, and in the case of particulate matter less than 2.5 microns in diameter, the major source baseline date is October 20, 2010.

1. "Minor Source Baseline Date" means the earliest date after the trigger date on which the first complete [see subparagraph (v) of this paragraph], application is submitted by a major stationary source or major modification subject to the requirements of Federal PSD regulations or this rule. The trigger date is:

(i) In the case of particulate matter less than 10 microns in diameter and sulfur oxides, August 7, 1977, and

(ii) In the case of nitrogen dioxide, February 8, 1988.

(iii) In the case of particulate matter less than 2.5 microns in diameter, October 20, 2011.

2. The baseline date is established for each pollutant for which increments or other equivalent measures have been established if:

(i) The area in which the proposed source or modification would construct is designated as attainment or unclassifiable under Section 107(d)(1)(A)(ii) or (iii) of the CAA for the pollutant on the date of its complete application under Federal PSD regulations or this rule.

(ii) In the case of a major stationary source, the pollutant would be emitted in significant amounts or, in the case of a major modification, there would be a significant net emissions increase of the pollutant.

3. Any minor source baseline date established originally for the TSP increments shall remain in effect and shall apply for purposes of determining the amount of available PM_{10} increments.

(o) "Baseline Area" shall mean any intrastate area (and every part thereof) designated as attainment or unclassifiable under Section 107(d)(1)(A)(ii) or (iii) of the CAA in which the major source or major modification establishing the minor source baseline date would construct or would have an air quality impact equal to or greater than one (1) microgram per cubic meter (annual average) of the pollutant for which the minor source baseline date is established.

1. Any baseline area established originally for the TSP increments shall remain in effect and shall apply for purposes of determining the amount of available PM_{10} increments.

(p) "Allowable Emissions" shall mean the emissions rate of a stationary source calculated using the maximum rated capacity of the source (unless the source is subject to enforceable limits which restrict the operating rate, or hours of operation, or both) and the most stringent of the following:

1. The applicable standards as set forth in 40 CFR 60, 61, and 63;

2. The applicable State Implementation Plan emissions limitation, including those with a future compliance date; or

3. The emissions rate specified as an enforceable permit condition, including those with a future compliance date.

(q) "Enforceable" shall mean all limitations and conditions which are enforceable, including those requirements developed pursuant to 40 CFR 60, 61, and 63, requirements within the State Implementation Plan and any permit requirements established pursuant to chapters 14, 15, or 16 of these regulations.

(r) "Secondary Emissions" shall mean emissions which would occur as a result of the construction or operation of a major stationary source or major modification, but do not come from the major stationary source or major modification itself. For the purpose of this rule, secondary emissions must be specific, well defined, quantifiable, and impact the same general area as the stationary source or modification which causes the secondary emissions. Secondary emissions may include, but are not limited to:

1. Emissions from ships or trains coming to or from the new or modified stationary source; and

2. Emissions from any off-site support facility which would not otherwise be constructed or increase its emissions as a result of the construction or operation of the major stationary source or major modification.

(s) "Innovative Control Technology" shall mean any system of air pollution control that has not been adequately demonstrated in practice, but would have a substantial likelihood of achieving greater continuous emissions reduction than any control system in current practice or of achieving at least comparable reductions at lower cost in terms of energy, economics, or non-air quality environmental impacts.

(t) "Fugitive Emissions" shall mean those emissions which could not reasonably pass through a stack, chimney, vent, roof monitor, or other functionally equivalent opening.

(u) "Actual Emissions" shall mean the actual rate of emissions of a regulated NSR pollutant from an emissions unit, as determined in accordance with subparagraphs (u)1. through (u)3. below, except that this definition shall not apply for establishing a PAL under paragraph (23) of this rule. Instead, subparagraphs (2)(nn) and (2)(uu) of this rule shall apply for this purpose.

1. In general, actual emissions as of any given date shall equal the average rate, in tons per year, at which the unit actually emitted the pollutant during a consecutive 24- month period which precedes the given data and which is representative of normal source operation. The Director shall allow the use of a different time period upon a determination that it is more representative of normal source operation. Actual emissions shall be calculated using the unit's actual operating hours, production rates, and types of materials processed, stored, or combusted during the selected time period.

2. The Director may presume that source-specific allowable emissions for the unit are equivalent to the actual emissions of the unit.

3. For any emissions unit which has not begun normal operations on the given date as determined in subparagraph (u)1., actual emissions shall equal the potential to emit of the unit on that date.

(v) "Complete" shall mean, in reference to an application for a permit, that the application contains all of the information necessary for processing the application.

(w) "Significant" shall mean, in reference to a net emissions increase or the potential of a source to emit any of the following pollutants, a rate of emissions that would equal or exceed any of the following rates:

Pollutant	**Emissions Rate (tons per year)**
Carbon monoxide	100
Nitrogen oxides	40
Sulfur dioxide	40
Particulate matter	25
PM_{10}	15
$PM_{2.5}$	10 (of direct $PM_{2.5}$) 40 (of SO_2 or NOx)
Ozone	40 (of VOC or NO_X)
Lead	0.6
Fluorides (excluding HF)	3
Sulfuric acid mist	7
Hydrogen sulfide (H_2S)	10
Total reduced sulfur (including H_2S)	10

Pollutant	**Emissions Rate (tons per year)**
Reduced sulfur compounds (including H_2S)	10

Municipal waste combustor organics (measured as total tetra- through octa-chlorinated dibenzo-p-dioxins and dibenzofurans)	3.5×10^{-6}
Municipal waste combustor metals (measured as particulate matter)	15
Municipal waste combustor acid gases (measured as sulfur dioxide and hydrogen chloride)	40
Municipal solid waste landfill emissions (measured as nonmethane organic compounds)	50
Greenhouse gases (GHGs) CO_2e	75,000

1. Significant means, in reference to a net emissions increase or the potential of a source to emit a regulated NSR pollutant that paragraph (2)(w) of this rule does not list: 100 TPY.

(10) Notwithstanding subparagraph (w) above, significant shall mean any emissions rate or any net emissions increase, excluding GHGs, associated with a major stationary source or major modification which would construct within ten (10) kilometers of a Class I area and have an impact on such area equal to or greater than one (1) microgram per cubic meter (24-hour average).

2. For GHGs, a source or modification would not be significant unless it results in:

(i) An emissions increase and a net emissions increase in GHGs on a total mass basis, and

(ii) A significant emissions increase and a significant net emissions increase in GHGs on a CO_2e basis.

(x) "Federal Land Manager" shall mean, with respect to any lands in the United States, the Secretary of the Department with authority over such lands.

(y) "High Terrain" shall mean any area having an elevation 900 feet or more above the base of the stack of a source.

(z) "Low Terrain" shall mean any area other than high terrain.

(aa) "Indian Governing Body" shall mean the governing body of any tribe, band, or group of Indians subject to the jurisdiction of the United States and recognized by the United States as possessing power of self-government.

(bb) "Indian Reservation" shall mean any Federally recognized reservation established by Treaty, Agreement, Executive Order, or Act of Congress.

(cc) "Adverse Impact on Visibility" means visibility impairment which interferes with the management, protection, preservation or enjoyment of the visitor's visual experience of the Federal Class I area. This determination must be

made on a case-by-case basis taking into account the geographic extent, intensity, duration, frequency and time of visibility impairments, and how these factors correlate with (1) times of visitor use of the Federal Class I area, and (2) the frequency and timing of natural conditions that reduce visibility.

(dd) "Visibility Impairment" means any humanly perceptible change in visibility (light extinction, visual range, contrast, coloration) from that which would have existed under natural conditions.

(ee) "Natural Conditions" includes naturally occurring phenomena that reduce visibility as measured in terms of visual range, contrast, or coloration.

(ff) "Environmentally Beneficial Activity" shall mean:

1. Any activity or project undertaken at an existing emissions unit which, as its primary purpose, reduces emissions of air pollutants from such unit, and is limited to the installation or modification of any of the following:

(i) Conventional or advanced flue gas desulfurization, or sorbent injection for SO_2;

(ii) Electrostatic precipitators, baghouses, high efficiency multiclones, or scrubbers for particulate matter or other pollutants;

(iii) Flue gas recirculation, low-NO_X burners, selective non-catalytic reduction or selective catalytic reduction for NO_X;

(iv) Regenerative thermal oxidizers, catalytic oxidizers, condensers, thermal incinerators, flares, carbon adsorbers, or combustion devices installed or modified to comply with hazardous emission standards for volatile organic compounds or hazardous air pollutants;

(v) Activities or projects undertaken to accommodate switching to an inherently less polluting fuel, including but not limited to natural gas or coal reburning, or the cofiring of natural gas and other inherently less polluting fuels, for the purpose of controlling emissions, and including any activity that is necessary to accommodate switching to an inherently less polluting fuel;

(vi) Pollution prevention projects which the Director determines to be environmentally beneficial.

(vii) Installation or modification of a technology other than those listed in subparagraphs (ff)1.(i) through (v), for the purposes set forth in subparagraph (ff)1., which has demonstrated an effectiveness at reducing emissions and is determined by the Director to be environmentally beneficial.

2. Environmentally beneficial projects do not include:

(i) The replacement of an existing emissions unit with a newer or different unit;

(ii) Reconstruction of an existing emissions unit;

(iii) Pollution prevention projects which result in an increased risk from the release of hazardous air pollutants;

(iv) Any project which would result in the increased production of an existing emissions unit.

(v) Any project which reduces emissions solely by transferring them to or from another media.

(vi) Any project which would cause an exceedance of an existing enforceable emissions limitation which was established to avoid applicability of the requirements of this rule.

(gg) "Pollution Prevention Projects" shall mean any activity that through process changes, product reformulation or redesign, or substitution of less polluting raw materials, eliminates or reduces the release of air pollutants (including fugitive emissions) and other pollutants to the environment prior to recycling, treatment, or disposal. It does not mean recycling (other than certain "in-process recycling" practices), energy recovery, treatment, or disposal.

(hh) "Clean coal technology" means any technology, including technologies applied at the precombustion, combustion, or post combustion stage, at a new or existing facility which will achieve significant reductions in air emissions of sulfur dioxide or oxides of nitrogen associated with the utilization of coal in the generation of electricity, or process steam which was not in widespread use as of November 15, 1990.

(ii) "Clean coal technology demonstration project" means a project using funds appropriated under the heading "Department of Energy-Clean Coal Technology", up to a total amount of $2,500,000,000 for commercial demonstration of clean coal technology, or similar projects funded through appropriations for the Environmental Protection Agency. The Federal contribution for a qualifying project shall be at least 20 percent of the total cost of the demonstration project.

(jj) "Temporary clean coal technology demonstration project" means a clean coal technology demonstration project that is operated for a period of 5 years or less, and which complies with the State implementation plans for the State in which the project is located and other requirements necessary to attain and maintain the national ambient air quality standards during the project and after it is terminated.

(kk) "Repowering" means replacement of an existing coal-fired boiler with one of the following clean coal technologies: atmospheric or pressurized fluidized bed combustion, integrated gasification combined cycle, magnetohydrodynamics, direct and indirect coal-fired turbines, integrated gasification fuel cells, or as determined by the Administrator, in consultation with the Secretary of Energy, a derivative of one or more of these technologies, and any other technology capable of

controlling multiple combustion emissions simultaneously with improved boiler or generation efficiency and with significantly greater waste reduction relative to the performance of technology in widespread commercial use as of November 15, 1990.

1. Repowering shall also include any oil and/or gas-fired unit which has been awarded clean coal technology demonstration funding as of January 1, 1991, by the Department of Energy.

(ll) Reserved.

(mm) "Significant emissions increase" means, for a regulated NSR pollutant, an increase in emissions that is significant (as defined in subparagraph (2)(w) of this rule) for that pollutant.

(nn) "Projected actual emissions" means

1. The maximum annual rate, in tons per year, at which an existing emissions unit is projected to emit a regulated NSR pollutant in any one of the 5 years (consecutive 12-month period) following the date the unit resumes regular operation after the project, or in any one of the 10 years following that date, if the project involves increasing the emissions unit's design capacity or its potential to emit that regulated NSR pollutant and full utilization of the unit would result in a significant emissions increase or a significant net emissions increase at the major stationary source.

2. In determining the projected actual emissions under subparagraph (2)(nn)1. of this rule (before beginning actual construction), the owner or operator of the major stationary source:

(i) Shall consider all relevant information, including but not limited to, historical operational data, the company's own representations, the company's expected business activity and the company's highest projections of business activity, the company's filings with the State or Federal regulatory authorities, and compliance plans under these regulations; and

(ii) Shall include fugitive emissions to the extent quantifiable and emissions associated with startups and shutdowns; and

(iii) Shall exclude, in calculating any increase in emissions that results from the particular project, that portion of the unit's emissions following the project that an existing unit could have accommodated during the consecutive 24-month period used to establish the baseline actual emissions under subparagraph (2)(uu) of this rule and that are not resulting from the particular project, including any increased utilization due to product demand growth; or

(iv) In lieu of using the method set out in subparagraphs (2)(nn)2.(i) through (iii), may elect to use the emissions unit's potential to emit, in tons per year, as defined under subparagraph (2)(d) of this rule.

(oo) Reserved.

(pp) "Prevention of Significant Deterioration (PSD) program" means the preconstruction permit program in this rule. Any permit issued under this program is a major NSR permit.

(qq) "Continuous emissions monitoring system (CEMS)" means all of the equipment that may be required to meet the data acquisition and availability requirements of this rule, to sample, condition (if applicable), analyze, and provide a record of emissions on a continuous basis.

(rr) "Predictive emissions monitoring system (PEMS)" means all of the equipment necessary to monitor process and control device operational parameters (for example, control device secondary voltages and electric currents) and other information (for example, gas flow rate, O2 or CO2 concentrations), and calculate and record the mass emissions rate (for example, lb/hr) on a continuous basis.

(ss) "Continuous parameter monitoring system (CPMS)" means all of the equipment necessary to meet the data acquisition and availability requirements of this rule, to monitor process and control device operational parameters (for example, control device secondary voltages and electric currents) and other information (for example, gas flow rate, O2 or CO2 concentrations), and to record average operational parameter value(s) on a continuous basis.

(tt) "Continuous emissions rate monitoring system (CERMS)" means the total equipment required for the determination and recording of the pollutant mass emissions rate (in terms of mass per unit of time).

(uu) "Baseline actual emissions" means the rate of emissions, in tons per year, of a regulated NSR pollutant, as determined in accordance with subparagraphs (2)(uu)1. through 4. of this rule.

1. For any existing electric utility steam generating unit, baseline actual emissions means the average rate, in tons per year, at which the unit actually emitted the pollutant during any consecutive 24-month period selected by the owner or operator within the 5-year period immediately preceding when the owner or operator begins actual construction of the project. The Director may allow the use of a different time period upon a determination that it is more representative of normal source operation.

(i) The average rate shall include fugitive emissions to the extent quantifiable and emissions associated with startups and shutdowns.

(ii) The average rate shall be adjusted downward to exclude any non-compliant emissions that occurred while the source was operating above any emission limitation that was legally enforceable during the consecutive 24-month period.

(iii) For a regulated NSR pollutant, when a project involves multiple

emissions units, only one consecutive 24-month period must be used to determine the baseline actual emissions for the emissions units being changed. A different consecutive 24-month period can be used for each regulated NSR pollutant.

(iv) The average rate shall not be based on any consecutive 24-month period for which there is inadequate information for determining annual emissions, in tons per year, and for adjusting this amount if required by subparagraph (2)(uu)1.(ii) of this rule.

2. For an existing emissions unit (other than an electric utility steam generating unit), baseline actual emissions means the average rate, in tons per year, at which the emissions unit actually emitted the pollutant during any consecutive 24-month period selected by the owner or operator within the 10-year period immediately preceding either the date the owner or operator begins actual construction of the project, or the date a complete permit application is received by the Department for a permit required under this rule, whichever is earlier, except that the 10-year period shall not include any period earlier than November 15, 1990.

(i) The average rate shall include fugitive emissions to the extent quantifiable and emissions associated with startups and shutdowns.

(ii) The average rate shall be adjusted downward to exclude any non-compliant emissions that occurred while the source was operating above an emission limitation that was legally enforceable during the consecutive 24-month period.

(iii) The average rate shall be adjusted downward to exclude any emissions that would have exceeded an emission limitation with which the major stationary source must currently comply, had such major stationary source been required to comply with such limitations during the consecutive 24-month period. However, if an emission limitation is part of a maximum achievable control technology standard that the Administrator proposed or promulgated under 40 CFR part 63, the baseline actual emissions need only be adjusted if the State has taken credit for such emissions reductions in an attainment demonstration or maintenance plan consistent with the requirements of 40 CFR § 51.165(a)(3)(ii)(G).

(iv) For a regulated NSR pollutant, when a project involves multiple emissions units, only one consecutive 24-month period must be used to determine the baseline actual emissions for all the emissions units being changed. A different consecutive 24-month period can be used for each regulated NSR pollutant.

(v) The average rate shall not be based on any consecutive 24-month period for which there is inadequate information for determining annual emissions, in tons per year, and for adjusting this amount if required by subparagraphs (2)(uu)2.(ii) and (iii) of this rule.

3. For a new emissions unit, as defined in subparagraph (2)(g)1. of this rule, the baseline actual emissions for purposes of determining the emissions

increase that will result from the initial construction and operation of such unit shall equal zero. During the first two years from the date which the emissions unit commenced operation, the baseline actual emissions shall equal the potential to emit for the unit. Thereafter, the unit will be considered an existing emissions unit and the baseline actual emissions will be determined in accordance with subparagraph (2)(uu)1. for an electric steam generating unit or subparagraph (2)(uu)2. for other emissions units.

4. For a PAL for a stationary source, the baseline actual emissions shall be calculated for existing electric utility steam generating units in accordance with the procedures contained in subparagraph (2)(uu)1. of this rule, for other existing emissions units in accordance with the procedures contained in subparagraph (2)(uu)2. of this rule, and for a new emissions unit in accordance with the procedures contained in subparagraph (2)(uu)3. of this rule.

(vv) Electric utility steam generating unit" means any steam electric generating unit that is constructed for the purpose of supplying more than one-third of its potential electric output capacity and more than 25 MW electrical output to any utility power distribution system for sale. Any steam supplied to a steam distribution system for the purpose of providing steam to a steam-electric generator that would produce electrical energy for sale is also considered in determining the electrical energy output capacity of the affected facility.

(ww) "Regulated NSR pollutant", for purposes of this rule, means the following:

1. Any pollutant for which a national ambient air quality standard has been promulgated and any constituents or precursors for such pollutants identified by the Administrator of EPA (e.g., volatile organic compounds and NO_X are precursors for ozone);

2. Any pollutant that is subject to any standard promulgated under section 111 of the Clean Air Act;

3. Any Class I or II substance subject to a standard promulgated under or established by title VI of the Clean Air Act; or

4. Any pollutant that otherwise is subject to regulation under the Clean Air Act; except that any or all hazardous air pollutants either listed in section 112 of the Clean Air Act, including compounds listed in 40 CFR Part 68 pursuant to Section 112(r) of the Clean Air Act, or added to the list pursuant to section 112(b)(2) of the Clean Air Act, which have not been delisted pursuant to section 112(b)(3) of the Clean Air Act, are not regulated NSR pollutants unless the listed hazardous air pollutant is also regulated as a constituent or precursor of a general pollutant listed under section 108 of the Clean Air Act.

5. $PM_{2.5}$ and PM_{10} emissions shall include gaseous emissions from a source or activity which condense to form particulate matter at ambient temperatures. Such condensable particulate matter shall be accounted for in applicability determinations and in establishing emissions limitations for $PM_{2.5}$ and PM_{10}.

Applicability determinations made prior to January 1, 2011 without accounting for condensable particulate matter shall not be considered invalid.

(xx) Reserved.

(yy) "Project" means a physical change in, or change in the method of operation of, an existing major stationary source.

(zz) Greenhouse gases (GHGs) means the aggregate of: carbon dioxide, nitrous oxide, methane, hydrofluorocarbons, perfluorocarbons, and sulfur hexafluoride.

(aaa) CO_2 equivalent emissions (CO_2e) shall represent the amount of GHGs emitted as computed by the following:

1. Multiplying the mass amount of emissions (TPY) for each of the six greenhouse gases in the pollutant GHGs by the gas's associated global warming potential as listed in Appendix I.

2. Sum the resultant value determined in subparagraph (aaa)1. for each gas to calculate the TPY of CO_2e.

(bbb) Replacement unit means an emissions unit for which all the criteria listed in subparagraphs (2)(bbb)1. through 4. of this section are met. No creditable emission reductions shall be generated from shutting down the existing emissions unit that is replaced. A replacement unit is subject to all permitting requirements for modifications under this rule.

1. The emissions unit is a reconstructed unit within the meaning of 40 CFR §60.15(b)(1), or the emissions unit completely takes the place of an existing emissions unit.

2. The emissions unit is identical to or functionally equivalent to the replaced emissions unit. A functionally equivalent unit would be a unit that serves the same purpose as the replaced unit. The Director shall be the determiner of whether a unit is functionally equivalent to the replaced unit.

3. The replacement does not alter the basic design parameters of the process unit. Basic design parameters shall include, but not be limited to, maximum hourly heat input, maximum hourly fuel utilization, or maximum hourly raw material feed, as appropriate. Basic design parameters of a replaced unit shall also include all source specific emission limits and/or monitoring requirements. The Director shall be the determiner of whether the basic design parameters of the replaced unit are altered.

4. The replaced emissions unit is permanently removed from the major stationary source, otherwise permanently disabled, or permanently barred from operation by a permit that is enforceable as a practical matter. If the replaced emissions unit is brought back into operation, it shall constitute a new emissions unit.

5. A Replacement Unit as defined in this subparagraph shall be subject to the applicability test in subparagraph (1)(f) of this rule for any modification.

(3) Ambient Air Increments. In areas designated as Class I, II or III, increases in pollutant concentration over the baseline shall be limited to the following:

Area	Pollutant	Maximum Allowable Increase (micrograms per cubic meter)
Class I	PM_{10}:	Annual arithmetic mean 4
		24-hour maximum..... 8
	$PM_{2.5}$	Annual arithmetic mean 1
		24-hour maximum..... 2
	Sulfur dioxide:	Annual arithmetic mean 2
		24-hour maximum..... 5
		3-hour maximum..... 25
	Nitrogen dioxide:	Annual arithmetic mean..... 2.5
Class II	PM_{10}:	Annual arithmetic mean..... 17
		24-hour maximum..... 30
	$PM_{2.5}$	Annual arithmetic mean 4
		24-hour maximum..... 9
	Sulfur dioxide:	Annual arithmetic mean..... 20
		24-hour maximum..... 91
		3-hour maximum..... 512
	Nitrogen dioxide:	Annual arithmetic mean..... 25
Class III	PM_{10}:	Annual arithmetic mean..... 34
		24-hour maximum..... 60
	$PM_{2.5}$	Annual arithmetic mean 8
		24-hour maximum..... 18

Area	Pollutant	Maximum Allowable Increase (micrograms per cubic meter)
	Sulfur dioxide:	Annual arithmetic mean 40
		24-hour maximum 182
		3-hour maximum 700

	Nitrogen dioxide:	Annual arithmetic mean 50

For any period other than an annual period, the applicable maximum allowable increase may be exceeded during one such period per year at any one location.

(4) Ambient Air Ceilings. No concentration of a pollutant shall exceed:

(a) The concentration permitted under the National Secondary Ambient Air Quality Standard, or

(b) The concentration permitted under the National Primary Ambient Air Quality Standard, whichever concentration is lowest for the pollutant for a period of exposure.

(5) Area Classifications.

(a) The following area, which was in existence on August 7, 1977, shall be a Class I area and may not be redesignated:

1. The Sipsey Wilderness Area, located in Franklin, Winston, and Lawrence counties, Alabama.

(b) Any other area is initially designated Class II:

(6) Exclusions from Increment Consumption.

(a) The following concentrations shall be excluded in determining compliance with a maximum allowable increase:

1. Concentrations attributable to the increase in emissions from stationary sources which have converted from the use of petroleum products, natural gas, or both by reason of an order in effect under Section 2(a) and (b) of the Energy Supply and Environmental Coordination Act of 1974 (or any superseding legislation) over the emissions from such sources before the effective date of such an order;

2. Concentrations attributable to the increase in emissions from sources which have converted from using natural gas by reason of a natural gas curtailment plan in effect pursuant to the Federal Power Act over the emissions from such sources before the effective date of such plan;

3. Concentrations of PM_{10} attributable to the increase in emissions from construction or other temporary emission-related activities of new or modified sources;

4. The increase in concentrations attributable to new sources outside the United States over the concentrations attributable to existing sources which are included in the baseline concentration; and

5. Concentrations attributable to the temporary increase in emissions of sulfur dioxide, PM_{10}, or nitrogen oxides from stationary sources which are affected by plan revisions approved by the EPA as being exempt from increment consumption.

(b) No exclusion of such concentrations shall apply for more than five (5) years after the effective date of the order to which subparagraph (a)1. of this paragraph or the plan to which subparagraph (a)2. of this paragraph refers, whichever is applicable. If both such order and plan are applicable, no such exclusion shall apply for more than five (5) years after the later of such effective dates.

(7) Reserved.

(8) Review of Major Stationary Sources and Major Modification - Source Applicability and Exemptions.

(a) No major stationary source or major modification shall begin actual construction unless, as a minimum, requirements contained in paragraphs (9) through (17) of this rule have been met.

(b) The requirements contained in paragraphs (9) through (17) shall apply to any major stationary source and any major modification with respect to each regulated NSR pollutant that it would emit, except as this rule would otherwise allow.

(c) The requirements contained in paragraphs (9) through (17) apply only to any major stationary source or major modification that would be constructed in an area designated as attainment or unclassified under Section 107(d)(1)(A)(ii) or (iii) of the CAA.

(d) The requirements contained in paragraphs (9) through (17) shall not apply to a major stationary source or major modification, if:

1. Reserved.

2. Reserved.

3. Reserved.

4. Reserved.

5. Reserved.

6. The source or modification would be a nonprofit health or nonprofit educational institution, or a major modification would occur at such an institution; or

7. The source or modification would be a major stationary source or major modification only if fugitive emissions, to the extent quantifiable, are considered in calculating the potential to emit of the stationary source or modification, and the

source does not belong to any of the following categories:

(i) Coal cleaning plants (with thermal dryers);

(ii) Kraft pulp mills;

(iii) Portland cement plants;

(iv) Primary zinc smelters;

(v) Iron and steel mills;

(vi) Primary aluminum ore reduction plants;

(vii) Primary copper smelters;

(viii) Municipal incinerators capable of charging more than 250 tons of refuse per day;

(ix) Hydrofluoric, sulfuric or nitric acid plants;

(x) Petroleum refineries;

(xi) Lime plants;

(xii) Phosphate rock processing plants;

(xiii) Coke oven batteries;

(xiv) Sulfur recovery plants;

(xv) Carbon black plants (furnace process);

(xvi) Primary lead smelters;

(xvii) Fuel conversion plants;

(xviii) Sintering plants;

(xix) Secondary metal production plants;

(xx) Chemical process plants;

(xxi) Fossil-fuel boilers (or combination thereof) totaling more than 250 million British thermal units per hour heat input;

(xxii) Petroleum storage and transfer units with a total storage capacity exceeding 300,000 barrels;

(xxiii) Taconite ore processing plants;

(xxiv) Glass fiber processing plants;

(xxv) Charcoal production plants;

(xxvi) Fossil fuel-fired steam electric plants of more than 250 million British thermal units per hour heat input;

(xxvii) Any other stationary source category which, as of August 7, 1980, is being regulated under Section 111 or 112 of the CAA; or

8. The source is a portable stationary source which has previously received a permit under this rule; and

(i) The owner or operator proposes to relocate the source and emissions of the source at the new location would be temporary; and

(ii) The emissions from the source would not exceed its allowable emissions; and

(iii) The emissions from the source would impact no Class I area and no area where an applicable increment is known to be violated; and

(iv) Reasonable notice is given to the Director prior to the relocation identifying the proposed new location and the probable duration of operation at the new location. Such notice shall be given to the Director not less than ten (10) days in advance of the proposed relocation unless a different time duration is previously approved by the Director.

(e) The requirements of paragraphs (9) through (17) of this rule shall not apply to a major stationary source or major modification with respect to a particular pollutant if the owner or operator demonstrates that, as to that pollutant, the source or modification is located in an area designated as nonattainment under Section 107 of the CAA.

(f) The requirements of paragraphs (10), (12), and (14) of this rule shall not apply to a major stationary source or major modification with respect to a particular pollutant if the allowable emissions of that pollutant from the source or the net emissions increase of that pollutant from the modification:

1. Would impact no Class I area and no area where an applicable increment is known to be violated, and

2. Would be temporary.

(g) The requirements of paragraphs (10), (12), and (14) of this rule as they relate to any maximum allowable increase for a Class II area shall not apply to a major modification at a stationary source that was in existence on March 1, 1978, if the net increase in allowable emissions of each regulated NSR pollutant from the modification after the application of BACT would be less than 50 tons per year.

(h) The Director may exempt a stationary source or modification from the

requirements of paragraph (12) of this rule with respect to monitoring for a particular pollutant if:

1. The emissions increase of the pollutant from the new source or the net emissions increase of the pollutant from the modification would cause, in any area, air quality impacts which are less than the following amounts:

Carbon monoxide .....575 μg/m^3, 8-hour average;
Nitrogen dioxide ..... 14 μg/m^3, annual average;
PM_{10}.....10 μg/m^3, 24-hour average;
$PM_{2.5}$ 4 μg/m^3, 24-hour average; Sulfur dioxide.....13 μg/m^3, 24-hour average; Ozone;[1]
Lead.....0.1 μg/m^3, 3-month average;
Fluorides.....0.25 μg/m^3, 24-hour average;
Total reduced sulfur .....10 μg/m^3, 1-hour average;
Hydrogen sulfide .....0.2 μg/m^3, 1-hour average; or

2. The concentrations of the pollutant in the area that the source or modification would affect are less than the concentrations listed in subparagraph (h)1. of this paragraph, or the pollutant is not listed in subparagraph (h)1. of this paragraph; or

3. The owner or operator of the stationary source or modification submits an application under this rule that the Director determines is complete, except with respect to the requirements for monitoring PM_{10} in paragraph (12) of this rule, on or before June 1, 1988. If a complete permit application is received after June 1, 1988, but not later than December 1, 1988, the requirements for PM_{10} monitoring under paragraph (12) of this rule apply in that data shall have been gathered over at least the period from February 1, 1988 to the date the complete application is received, except that if the Director determines that a complete and adequate analysis can be accomplished with monitoring data over a shorter period (not to be less than four months) then the shorter period of data gathering will suffice to meet the requirements of paragraph (12) of this rule.

---

[1]No de minimus air quality level is provided for ozone. However, any net increase of 100 tons per year or more of VOC or NO_X subject to rule 335-3-14-.04 would be required to perform an ambient impact analysis including the gathering of ambient air quality data.

(i) Reserved.

(j) Reserved.

(k) At the discretion of the Director, the requirements for air quality monitoring of PM_{10} in subparagraphs (12)(a)1. through 4. of this rule may not apply to a particular source or modification when the owner or operator of the source or modification submits an application for a permit under this rule on or before June 1, 1988 and the Director subsequently determines that the application as submitted before that date was complete, except with respect to the requirements for monitoring PM_{10} in subparagraphs (12)(a)1. through 4.

(l) The requirements for air quality monitoring of PM_{10} in subparagraphs (12)(a)2. and 4. and subparagraph (12)(c) shall apply to a particular source or modification if the owner or operator of the source of modification submits an application for permit under this rule after June 1, 1988 and no later than December 1, 1988. The data shall have been gathered over at least the period from February 1, 1988 to the date the application becomes otherwise complete in accordance with the provisions set forth under subparagraph (12)(a)8., except that if the Director determines that a complete and adequate analysis can be accomplished with monitoring data over a shorter period (not to be less than 4 months), the data that subparagraph (12)(a)3. requires shall have been gathered over that shorter period.

(m) Any project which is an environmentally beneficial project as defined in subparagraph (2)(ff) of this rule shall not be considered a major modification as defined in paragraph (2) of this rule and is exempt from all provisions of this rule except paragraphs (10), (11), (13), (15), and (16).

(n) The requirements of paragraphs (10), (11), (12), (14), and (15) of this Rule shall not apply with respect to GHGs for any major stationary source or major modification.

(9) Control Technology Review.

(a) A major stationary source or major modification shall meet each applicable emissions limitation under the State Implementation Plan and each applicable limitation standard and standard of performance under 40 CFR 60 and 61.

(b) A new major stationary source shall apply BACT for each regulated NSR pollutant that it would have the potential to emit in significant amounts.

(c) A major modification shall apply BACT for each regulated NSR pollutant for which it would result in a significant net emissions increase at the source. This requirement applies to each proposed emissions unit at which a net emissions increase in the pollutant would occur as a result of a physical change or change in the method of operation in the unit.

(d) For phased construction projects, the determination of BACT shall be reviewed and modified as appropriate at the latest reasonable time which occurs no later than eighteen (18) months prior to commencement of construction of each independent phase of the project. At such time, the owner or operator of the applicable stationary source may be required to demonstrate the adequacy of any previous determination of BACT for the source.

(10) Source Impact Analysis.

(a) Required Demonstration. The owner or operator of the proposed source or modification shall demonstrate that allowable emission increases from the proposed source or modification, in conjunction with all other applicable emissions increases or reductions (including secondary emissions), would not

cause or contribute to air pollution in violation of:

1. Any National Ambient Air Quality Standard in any air quality control region; or

2. Any applicable maximum allowable increase over the baseline concentration in any area.

(b) Significant Impact Levels. The demonstration required in subparagraph (10)(a) is deemed to have been made if the emissions increase for the new stationary source alone or from the modification alone would cause, in all areas, air quality impacts less than the following amounts:

Pollutant	Averaging Time	Class I Significance Level	Class II Significance Level
SO_2	3 hour		25 μg/m³
	24 hour		5 μg/m³
	Annual		1 μg/m³
PM_{10}	24 hour		5 μg/m³
	Annual		1 μg/m³
$PM_{2.5}$	24 hour	0.07 μg/m³	1.2 μg/m³
	Annual	0.06 μg/m³	0.3 μg/m³
NO_2	Annual		1 μg/m³
CO	1 hour		2,000 μg/m³
	8 hour		500 μg/m³

(11) Air Quality Models.

(a) All estimates of ambient concentrations required under this rule shall be based on the applicable air quality models, data bases, and other requirements specified in the "Guideline on Air Quality Models". (U.S. Environmental Protection Agency, Office of Air Quality Planning and Standards, Research Triangle Park, NC 27711)

(12) Air Quality Analysis.

(a) Preapplication Analysis.

1. Any application for a permit under this rule shall contain an analysis of ambient air quality in the area that the major stationary source or major modification would affect for each of the following pollutants:

(i) For the source, each pollutant that it would have the potential to emit in a significant amount;

(ii) For the modification, each pollutant for which it would result in a significant net emissions increase.

2. With respect to any such pollutant for which no NAAQS exists, the analysis shall contain such air quality monitoring data as the Director determines is necessary to assess ambient air quality for that pollutant in any area that the emissions of that pollutant would affect.

3. With respect to any such pollutant (other than nonmethane hydrocarbons) for which such a standard does exist, the analysis shall contain continuous air quality monitoring data gathered for purposes of determining whether emissions of that pollutant would cause or contribute to a violation of the standard or any maximum allowable increase.

4. In general, the continuous air quality monitoring data that is required shall have been gathered over a period of at least one (1) year and shall represent the year preceding receipt of the application, except that, if the Director determines that a complete and adequate analysis can be accomplished with monitoring data gathered over a period shorter than one (1) year (but not to be less than four (4) months), the data that is required shall have been gathered over at least that shorter period.

5. Reserved.

6. The owner or operator of a proposed stationary source or modification of VOC who satisfies all conditions of rule 335-3-14-.05 may provide post-approval monitoring data for ozone in lieu of providing preconstruction data as required under subparagraph (a) of this paragraph.

7. For any application that becomes complete, except as the requirements of subparagraphs (a)3. and 4. of this paragraph pertaining to PM_{10}, after December 1, 1988 and no later than August 1, 1989 the data that subparagraph (a)3. of this paragraph requires shall have been gathered over at least the period from August 1, 1988 to the date the application becomes otherwise complete, except that if the Director determines that a complete and adequate analysis can be accomplished with monitoring data over a shorter period (not to be less than 4 months), the data that subparagraph (a)3. of this paragraph requires shall have been gathered over that shorter period.

8. With respect to any requirements for air quality monitoring of PM_{10} under subparagraphs (8)(k) and (l) of this rule, the owner or operator of the source or modification shall use a monitoring method approved by the Director and shall estimate the ambient concentrations of PM_{10} using the data collected by such approved monitoring method in accordance with estimating procedures approved by the Director.

(b) <u>Post-construction Monitoring.</u> The owner or operator of a major

stationary source or major modification shall, after construction of the stationary source or modification, conduct such ambient monitoring as the Director determines is necessary to determine the impact for said source or modification may have, or is having, on air quality in any area.

(c) Operations of Monitoring Stations. The owner or operator of a major stationary source or major modification shall meet Federal monitoring quality assurance requirements during the operation of monitoring stations for purposes of satisfying this paragraph.

(d) Visibility Monitoring. The Director may require monitoring of visibility in any Federal Class I area near the proposed new stationary source or major modification for such purposes and by such means as the Director deems necessary and appropriate.

(13) Source Information. The owner or operator of a proposed source or modification shall submit all information necessary to perform any analysis or to make any determination required under this rule.

(a) With respect to a source or modification to which rules 335-3-14-.04(9), 335-3-14-.04(10), 335-3-14-.04(12), and 335-3-14-.04(14) apply, such information shall include:

1. A description of the nature, location, design capacity, and typical operating schedule of the source or modification, including specifications and drawings showing its design and plant layout;

2. A detailed schedule for construction of the source or modification;

3. A detailed description as to what system of continuous emission reduction is planned for the source or modification, emission estimates and any other information necessary to determine that BACT would be applied.

(b) Upon request of the Director, the owner or operator shall also provide information on:

1. The air quality impact of the source or modification, including meteorological and topographical data necessary to estimate such impact; and

2. The air quality impacts and the nature and extent of any or all general commercial, residential, industrial, and other growth which has occurred since August 7, 1977, in the area the source or modification would affect.

(14) Additional Impact Analyses.

(a) The owner or operator shall provide an analysis of the impact on visibility, soils and vegetation that would occur as a result of the source or modification and general commercial, residential, industrial, and other growth associated with the source or modification. The owner or operator need not provide an analysis of the impact on vegetation having no significant commercial or

recreational value.

(b) The owner or operator shall provide an analysis of the air quality impact projected for the area as a result of general commercial, residential, industrial, and other growth associated with the source or modification.

(15) Sources Impacting Federal Class I Areas - Additional Requirements.

(a) Notice to Federal Land Managers and to EPA. The Director shall provide notice of any permit application for a proposed major stationary source or major modification the emissions from which would affect a Class I area to EPA, the Federal Land Manager and the Federal official charged with direct responsibility for management of any lands within any such area. The Director shall provide such notice promptly after receiving the application. The Director shall also provide EPA, the Federal Land Manager and such Federal officials with notice of every action related to the consideration of such permit.

(b) The Director shall notify all affected Federal Land Managers within 30 days of receipt of an advance notification of any permit application for a proposed major stationary source or modification, the emissions from which may affect a Class I Area. The Director shall provide written notification to all affected Federal Land Managers within 30 days of receiving the permit application. At least 30 days prior to the publication of the notice for public comment on the application, the Director shall provide the Federal Land Manager with a copy of all information relevant to the permit application including an analysis provided by the source of the potential impact of the proposed source on visibility.

(c) Visibility analysis. The Director shall consider any analysis performed by the Federal Land Manager concerning visibility impairment if the analysis is received within 30 days of being provided the permit application information and analysis required by subparagraph (b) of this paragraph above. Where the Director finds that such an analysis does not demonstrate to the satisfaction of the Director that an adverse impact on visibility will result in the Federal Class I area, the Director must, in the notice of public comment on the permit application, either explain his decision or give notice as to where the explanation can be obtained.

(d) Denial - Impact on Air Quality Related Values. The Federal Land Manager of any such lands may demonstrate to the Director that the emissions from a proposed source or modification would have an adverse impact on the air quality related values (including visibility) of those lands, notwithstanding that the change in air quality resulting from emissions from such source or modification would not cause or contribute to concentrations which would exceed the maximum allowable increases for a Class I area. If the Director concurs with such demonstration, then he shall not issue the permit.

(e) Class I Variances. The owner or operator of a proposed source or modification may demonstrate to the Federal Land Manager that the emissions from such source or modification would have no adverse impact on the air quality related values of any such lands (including visibility), notwithstanding that the

change in air quality resulting from emissions from such source or modification would cause or contribute to concentrations which would exceed the maximum allowable increases for a Class I area. If the Federal Land Manager concurs with such demonstration and he so certifies, the Director may issue the permit with such emission limitations as may be necessary to assure that emissions of sulfur dioxide, $PM_{2.5}$, PM_{10}, and nitrogen oxides would not exceed the following maximum allowable increases over baseline concentration for such pollutants:

Pollutant	Maximum Allowable Increase (micrograms per cubic meter)
PM_{10}	Annual arithmetic mean..... 17
	24-hour maximum 30
PM2.5	Annual arithmetic mean 4
	24-hour maximum.....9
Sulfur dioxide	Annual arithmetic mean..... 20
	24-hour maximum 91
	3-hour maximum 325
Nitrogen dioxide	Annual arithmetic mean..... 25

provided that the applicable requirements of this rule are otherwise met.

(f) Sulfur Dioxide Variance by Governor with Federal Land Manager's Concurrence. The owner or operator of a proposed source or modification which cannot be approved under subparagraph (c) of this paragraph may demonstrate to the Governor that the source or modification cannot be constructed by reason of any maximum allowable increase for sulfur dioxide for a period of twenty-four (24) hours or less applicable to any Class I area and, in the case of Federal mandatory Class I areas, that a variance under this clause would not adversely affect the air quality related values of the area (including visibility). The Governor, after consideration of the Federal Land Manager's recommendation (if any) and subject to his concurrence, may, after notice and public hearing, grant a variance from such maximum allowable increase. If such variance is granted, the Director shall issue a permit to such source or modification pursuant to the requirements of paragraph (16) of this rule provided, that the applicable requirements of this rule are otherwise met.

(g) Variance by the Governor with the President's Concurrence. In any case where the Governor recommends a variance in which the Federal Land Manager does not concur, the recommendations of the Governor and Federal Land Manager shall be transmitted to the President. The President may approve the Governor's recommendation if he finds that the variance is in the national interest. If the variance is approved, the Director shall issue a permit pursuant to the requirements of paragraph (16) of this rule provided, that the applicable requirements of this rule are otherwise met.

(h) Emission Limitations for Presidential or Gubernatorial Variance. In the case of a permit issued pursuant to subparagraphs (f) or (g) of this paragraph, the source or modification shall comply with such emission limitations as may be necessary to assure that emissions of sulfur dioxide from the source or modification would not (during any day on which the otherwise applicable maximum allowable increases are exceeded) cause or contribute to concentrations which would exceed the following maximum allowable increases over the baseline concentration and to assure that such emissions would not cause or contribute to concentrations which exceed the otherwise applicable maximum allowable increases for periods of exposure of twenty-four (24) hours or less for more than eighteen (18) days, not necessarily consecutive, during any annual period:

Period of exposure	**Maximum Allowable Increase (micrograms per cubic meter)**	
	Terrain areas	
	Low	**High**
24-hour maximum	36	62
3-hour maximum	130	221

(16) Public Participation.

(a) After receipt of an application for an Air Permit or any addition to such application, the Director shall advise the applicant of any deficiency in the application or in the information submitted. In the event of such a deficiency, the date of receipt of the application shall be, for the purpose of this rule, the date on which the Director received all required information.

(b) Within one (1) year after receipt of a complete application, the Director shall make a final determination of the application. This involves performing the following actions in a timely manner:

1. Make a preliminary determination whether construction should be approved, approved with conditions or disapproved.

2. Make available on the Department's web site a copy of all materials the applicant submitted, a copy of the preliminary determination and a copy or summary of other materials, if any, considered in making the preliminary determination.

3. Notify the public, by posting on the Department's web site for the duration of the comment period of 30 days, the preliminary determination, the degree of increment consumption that is expected from the source or modification, the opportunity to comment on the proposed permit, how to request and/or attend a public hearing on the proposed permit, a copy of the proposed permit, and information on how to access the administrative record for the proposed permit.

4. Send a copy of the notice of public comment to the applicant, to EPA and to officials and agencies having cognizance over the location where the proposed construction would occur as follows: any other State or local air pollution control agencies, the chief executives of the city and county where the source or modification would be located, any comprehensive regional land use planning agency and any State, Federal Land Manager, or Indian Governing Body whose lands may be affected by emissions from the source or modification.

5. Provide opportunity for a public hearing for interested persons to appear and submit written or oral comments on the air quality impact of the source or modification, alternatives to the source or modification, the control technology required, and other appropriate considerations.

6. Consider all written comments submitted within a time specified in the notice of public comment and all comments received at any public hearing(s) in making a final decision on the approvability of the application. No later than ten (10) days after the close of the public comment period, the applicant may, as part of the public record, submit a written response to any comments submitted by the public. The Director shall consider the applicant's response in making a final decision. The Director shall make all comments available for public inspection on the same web site where the Director made available preconstruction information relating to the proposed source or modification.

7. Make a final determination whether construction should be approved, approved with conditions or disapproved pursuant to this rule.

8. Notify the applicant in writing of the final determination and make such notification available for public inspection at the same web site where the Director made available preconstruction information and public comments relating to the source or modification.

(17) Source Obligation.

(a) An Air Permit authorizing construction shall become invalid if construction is not commenced within twenty-four (24) months after receipt of such approval, if construction is discontinued for a period of twenty-four (24) months or more, or if construction is not completed within a reasonable time. The Director may extend the twenty-four (24) month period upon satisfactory showing that an extension is justified. This provision does not apply to the time period between construction of the approved phases of a phased construction project; each phase must commence construction within twenty-four (24) months of the projected and approved commencement date.

(b) An Air Permit authorizing construction shall not relieve any owner or operator of the responsibility to comply fully with applicable provisions of the State Implementation Plan and any other requirements under local, State or Federal law.

(c) At such time that a particular source or modification becomes a major stationary source or major modification solely by virtue of a relaxation in any

enforceable limitation which was established after August 7, 1980, on the capacity of the source or modification otherwise to emit a pollutant, such as a restriction on hours of operation, then the requirements of paragraphs (9) through (17) of this rule shall apply to the source or modification as though construction had not yet commenced on the source or modification.

(d) The provisions of this subparagraph (17)(d) apply to projects at an existing emissions unit at a major stationary source (other than projects at a source with a PAL), that are not excluded from the definition of physical change or change in the method of operation, where there is not a reasonable possibility that the project is a part of a major modification and may result in a significant emissions increase and the owner or operator elects to use the method specified in subparagraphs (2)(nn)2.(i) through (iii) of this rule for calculating projected actual emissions.

1. Before beginning actual construction of the project, the owner or operator shall document and maintain a record of the following information:

(i) A description of the project;

(ii) Identification of the emissions unit(s) whose emissions of a regulated NSR pollutant could be affected by the project; and

(iii) A description of the applicability test used to determine that the project is not a major modification for any regulated NSR pollutant, including the baseline actual emissions, the projected actual emissions, the amount of emissions excluded under subparagraph (2)(nn)2.(iii) of this rule and an explanation for why such amount was excluded, and any netting calculations, if applicable.

2. The owner or operator of the source shall make the information required to be documented and maintained pursuant to subparagraph (17)(d) of this rule available for review upon a request for inspection by the Department or the general public.

3. Nothing in this subparagraph shall be construed to exempt the owner or operator of such a unit from obtaining any minor source Air Permit in accordance with the requirements of this chapter.

(e) The provisions of this subparagraph (17)(e) apply to projects at an existing emissions unit at a major stationary source (other than projects at a source with a PAL) in circumstances where there is a reasonable possibility that a project that is not a part of a major modification, and that is not excluded from the definition of physical change or change in the method of operation, may result in a significant emissions increase and the owner or operator elects to use the method specified in subparagraphs (2)(nn)2.(i) through (iii) of this rule for calculating projected actual emissions.

1. Before beginning actual construction of the project, the owner or operator shall document and maintain a record of the following information:

(i) A description of the project;

(ii) Identification of the emissions unit(s) whose emissions of a regulated NSR pollutant could be affected by the project; and

(iii) A description of the applicability test used to determine that the project is not a major modification for any regulated NSR pollutant, including the baseline actual emissions, the projected actual emissions, the amount of emissions excluded under subparagraph (2)(nn)2.(iii) of this rule and an explanation for why such amount was excluded, and any netting calculations, if applicable.

2. Before beginning actual construction, the owner or operator shall provide a copy of the information set out in subparagraph (17)(e)1. of this rule to the Director. Nothing in this subparagraph shall be construed to require the owner or operator of such a unit to obtain any determination from the Director before beginning actual construction; however, nothing in this subparagraph shall be construed to exempt the owner or operator of such a unit from obtaining any minor source Air Permit in accordance with the requirements of this chapter.

3. The owner or operator shall monitor the emissions of any regulated NSR pollutant that could increase as a result of the project and that is emitted by any emissions unit identified in subparagraph (17)(e)1.(ii) of this rule; and calculate and maintain a record of the annual emissions, in tons per year on a calendar year basis, for a period of 5 years following resumption of regular operations after the change, or for a period of 10 years following resumption of regular operations after the change if the project increases the design capacity or potential to emit of that regulated NSR pollutant at such emissions unit.

4. The owner or operator shall submit a report to the Director within 60 days after the end of each year during which records must be generated under subparagraph (17)(e)3. of this rule. The report shall contain the following:

(i) All information required by subparagraph (17)(e)1. of this rule.

(ii) The name, address and telephone number of the major stationary source;

(iii) The annual emissions as calculated pursuant to subparagraph (17)(e)3. of this rule; and

(iv) Any other information that the owner or operator wishes to include in the report.

5. The owner or operator of the source shall make the information required to be documented and maintained pursuant to subparagraph (17)(e) of this rule available for review upon a request for inspection by the Department.

6. All information submitted to the Department pursuant to the requirements of subparagraph (17)(e) of this rule shall be available for review at

the request of any member of the public in accordance with the Department's public records review procedures found in ADEM Admin. Code r. 335-1-1-.06.

(18) Innovative Control Technology.

(a) An owner or operator of a proposed major stationary source or major modification may request the Director in writing no later than the close of the comment period under paragraph (16) of this rule to approve a system of innovative control technology.

(b) The Director shall determine that the source or modification may employ a system of innovative control technology, if:

1. The proposed control system would not cause or contribute to an unreasonable risk to public health, welfare or safety in its operation or function;

2. The owner or operator agrees to achieve a level of continuous emissions reduction equivalent to that which would have been required under subparagraph (9)(b) of this rule by a date specified by the Director. Such date shall not be later than four (4) years from the time of startup or seven (7) years from permit issuance;

3. The source or modification would meet the requirements of paragraphs (9) and (10) of this rule based on the emissions rate that the stationary source employing the system of innovative control technology would be required to meet on the date specified by the Director;

4. The source or modification would not before the date specified by the Director:

(i) Cause or contribute to a violation of an applicable National Ambient Air Quality Standard; or

(ii) Impact any Class I area; or

(iii) Impact any area where an applicable increment is known to be violated; and

5. The consent of the Governor of any other affected state is secured;

6. All other applicable requirements including those for public participation have been met.

(c) The Director shall withdraw any approval to employ a system of innovative control technology made under this rule, if:

1. The proposed system fails by the specified date to achieve the required continuous emissions reduction rate; or

2. The proposed system fails before the specified date so as to contribute to an unreasonable risk to public health, welfare or safety; or

3. The Director decides at any time that the proposed system is unlikely to achieve the required level of control or to protect the public health, welfare or safety.

(d) If a source or modification fails to meet the required level of continuous emission reduction within the specified time period or the approval is withdrawn in accordance with subparagraph (c) of this paragraph, the Director may allow the source or modification up to an additional three (3) years to meet the requirement for the application of BACT through use of a demonstrated system of control.

(19) Permit Rescission.

(a) Any owner or operator of a stationary source or modification who holds a permit for the source or modification which was issued under this rule as in effect on July 30, 1987 or any earlier version of this rule, may request that the Director rescind the permit or a particular portion of the permit.

(b) The Director shall grant an application for rescission if the application shows that this rule would not apply to the source or modification.

(c) If the Director rescinds a permit under this rule, the public shall be given adequate notice of the rescission. Publication of an announcement of rescission on the Department's web site within sixty (60) days of the rescission shall be considered adequate notice.

(20) Reserved.

(21) Reserved.

(22) Reserved.

(23) Actuals PALs. The provisions in subparagraphs (23)(a) through (o) of this rule govern actuals PALs.

(a) Applicability.

1. The Director may approve the use of an actuals PAL for any existing major stationary source if the PAL meets the requirements in subparagraphs (23)(a) through (o) of this rule. The term "PAL" shall mean "actuals PAL" throughout paragraph (23) of this rule.

2. Any physical change in or change in the method of operation of a major stationary source that maintains its total source-wide emissions below the PAL level, meets the requirements in subparagraphs (23)(a) through (o) of this rule, and complies with the PAL permit:

(i) Is not a major modification for the PAL pollutant;

(ii) Does not have to be approved through the PSD program;

3. A major stationary source shall continue to comply with all applicable Federal or State requirements, emission limitations, and work practice requirements that were established prior to the effective date of the PAL.

(b) Definitions. For the purposes of this rule, the definitions in subparagraphs (23)(b)1. through 11. of this rule apply. When a term is not defined in these paragraphs, it shall have the meaning given in paragraph (2) of this rule or in the Clean Air Act.

1. "Actuals PAL" for a major stationary source means a PAL based on the baseline actual emissions (as defined in subparagraph (2)(uu) of this rule) of all emissions units (as defined in subparagraph (2)(g) of this rule) at the source, that emit or have the potential to emit the PAL pollutant.

2. "Allowable emissions" means "allowable emissions" as defined in subparagraph (2)(p) of this rule, except as this definition is modified according to subparagraphs (23)(b)2.(i) and (ii) of this rule.

(i) The allowable emissions for any emissions unit shall be calculated considering any emission limitations that are enforceable as a practical matter on the emissions unit's potential to emit.

(ii) An emissions unit's potential to emit shall be determined using the definition in subparagraph (2)(d) of this rule, except that the words "or enforceable as a practical matter" should be added after "enforceable."

3. "Small emissions unit" means an emissions unit that emits or has the potential to emit the PAL pollutant in an amount less than the significant level for that PAL pollutant, as defined in subparagraph (2)(w) of this rule or in the Clean Air Act, whichever is lower.

4. "Major emissions unit" means:

(i) Any emissions unit that emits or has the potential to emit 100 tons per year or more of the PAL pollutant, other than GHG as CO2e, in an attainment area, or

(ii) Any emissions unit that has the potential to emit 75,000 tons per year of GHG as CO2e.

5. "Plantwide applicability limitation (PAL)" means an emission limitation expressed in tons per year, for a pollutant at a major stationary source, that is enforceable as a practical matter and established source-wide in accordance with subparagraphs (23)(a) through (o) of this rule.

6. "PAL effective date" generally means the date of issuance of the PAL permit. However, the PAL effective date for an increased PAL is the date any emissions unit that is part of the PAL major modification becomes operational and begins to emit the PAL pollutant.

7. "PAL effective period" means the period beginning with the PAL effective date and ending 10 years later.

8. "PAL major modification" means, notwithstanding subparagraphs (2)(b) and (2)(c) of this rule (the definitions for major modification and net emissions increase), any physical change in or change in the method of operation of the PAL source that causes it to emit the PAL pollutant at a level equal to or greater than the PAL.

9. "PAL permit" means the major NSR permit, the minor NSR permit, or the title V permit issued by the Director that establishes a PAL for a major stationary source.

10. "PAL pollutant" means the pollutant for which a PAL is established at a major stationary source.

11. "Significant emissions unit" means an emissions unit that emits or has the potential to emit a PAL pollutant in an amount that is equal to or greater than the significant level (as defined in subparagraph (2)(w) of this rule or in the Clean Air Act, whichever is lower) for that PAL pollutant, but less than the amount that would qualify the unit as a major emissions unit as defined in subparagraph (23)(b)4. of this rule.

(c) Permit application requirements. As part of a permit application requesting a PAL, the owner or operator of a major stationary source shall submit the following information to the Director for approval:

1. A list of all emissions units at the source designated as small, significant or major based on their potential to emit. In addition, the owner or operator of the source shall indicate which, if any, Federal or State applicable requirements, emission limitations, or work practices apply to each unit.

2. Calculations of the baseline actual emissions (with supporting documentation). Baseline actual emissions are to include emissions associated not only with operation of the unit, but also emissions associated with startup and shutdown.

3. The calculation procedures that the major stationary source owner or operator proposes to use to convert the monitoring system data to monthly emissions and annual emissions based on a 12-month rolling total for each month as required by subparagraph (23)(m)1. of this rule.

(d) General requirements for establishing PALs.

1. The Director is allowed to establish a PAL at a major stationary source, provided that at a minimum, the requirements in subparagraphs (23)(d)1.(i) through (vii) of this rule are met.

(i) The PAL shall impose an annual emission limitation in tons per year, that is enforceable as a practical matter, for the entire major stationary source.

For each month during the PAL effective period after the first 12 months of establishing a PAL, the major stationary source owner or operator shall show that the sum of the monthly emissions from each emissions unit under the PAL for the previous 12 consecutive months is less than the PAL (a 12-month total, rolled monthly). For each month during the first 11 months from the PAL effective date, the major stationary source owner or operator shall show that the sum of the preceding monthly emissions from the PAL effective date for each emissions unit under the PAL is less than the PAL.

(ii) The PAL shall be established in a PAL permit that meets the public participation requirements in subparagraph (23)(e) of this rule.

(iii) The PAL permit shall contain all the requirements of subparagraph (23)(g) of this rule.

(iv) The PAL shall include fugitive emissions, to the extent quantifiable, from all emissions units that emit or have the potential to emit the PAL pollutant at the major stationary source.

(v) Each PAL shall regulate emissions of only one pollutant.

(vi) Each PAL shall have a PAL effective period of 10 years.

(vii) The owner or operator of the major stationary source with a PAL shall comply with the monitoring, recordkeeping, and reporting requirements provided in subparagraphs (23)(l) through (n) of this rule for each emissions unit under the PAL through the PAL effective period.

2. At no time (during or after the PAL effective period) are emissions reductions of a PAL pollutant that occur during the PAL effective period creditable as decreases for purposes of offsets under rule 335-3-14-.05 of this chapter unless the level of the PAL is reduced by the amount of such emissions reductions and such reductions would be creditable in the absence of the PAL.

(e) Public participation requirements for PALs. PALs for existing major stationary sources shall be established, renewed, or increased through a procedure that is consistent with those of this rule and 40 CFR Parts 51.160 and 51.161. This includes the requirement that the Director provide the public with notice of the proposed approval of a PAL permit and at least a 30-day period for submittal of public comment. The Director must address all material comments before taking final action on the permit.

(f) Setting the 10-year actuals PAL level. The actuals PAL level for a major stationary source shall be established as the sum of the baseline actual emissions (as defined in subparagraph (2)(uu) of this rule) of the PAL pollutant for each emissions unit at the source; plus an amount equal to the applicable significant level for the PAL pollutant under subparagraph (2)(w) of this rule or under the Clean Air Act, whichever is lower. When establishing the actuals PAL level, for a PAL pollutant, only one consecutive 24-month period must be used to determine the baseline actual emissions for all existing emissions units. However, a different

consecutive 24-month period may be used for each different PAL pollutant. Emissions associated with units that were permanently shutdown after this 24-month period must be subtracted from the PAL level. Emissions from units on which actual construction began after the beginning of the 24-month period must be added to the PAL level in an amount equal to the potential to emit of the unit if the unit began operation less than 24 months prior to the submittal of the PAL application. Baseline actual emissions from units on which actual construction began after the beginning of the 24-month period and commenced operation 24 months or more prior to the submittal of the PAL application must be added to the PAL based upon any 24 month period since the unit commenced operation. The Director shall specify a reduced PAL level(s) (in tons/yr) in the PAL permit to become effective on the future compliance date(s) of any applicable Federal or State regulatory requirement(s) that the Director is aware of prior to issuance of the PAL permit. For instance, if the source owner or operator will be required to reduce emissions from industrial boilers in half from baseline emissions of 60 ppm NO_X to a new rule limit of 30 ppm, then the permit shall contain a future effective PAL level that is equal to the current PAL level reduced by half of the original baseline emissions of such unit(s).

(g) Contents of the PAL permit. The PAL permit must contain, at a minimum, the information in subparagraphs (23)(g)1. through 10. of this rule.

1. The PAL pollutant and the applicable source-wide emission limitation in tons per year.

2. The PAL permit effective date and the expiration date of the PAL (PAL effective period).

3. Specification in the PAL permit that if a major stationary source owner or operator applies to renew a PAL in accordance with subparagraph (23)(j) of this rule before the end of the PAL effective period, then the PAL shall not expire at the end of the PAL effective period. It shall remain in effect until a revised PAL permit is issued by the Director.

4. A requirement that emission calculations for compliance purposes must include emissions from startups and shutdowns.

5. A requirement that, once the PAL expires, the major stationary source is subject to the requirements of subparagraph (23)(i) of this rule.

6. The calculation procedures that the major stationary source owner or operator shall use to convert the monitoring system data to monthly emissions and annual emissions based on a 12-month rolling total as required by subparagraph (23)(m)1. of this rule.

7. A requirement that the major stationary source owner or operator monitor all emissions units in accordance with the provisions under subparagraph (23)(l) of this rule.

8. A requirement to retain the records required under subparagraph

(23)(m) of this rule on site. Such records may be retained in an electronic format.

9. A requirement to submit the reports required under subparagraph (23)(n) of this rule by the required deadlines.

10. Any other requirements that the Director deems necessary to implement and enforce the PAL.

(h) PAL effective period and reopening of the PAL permit. The requirements in subparagraphs (23)(h)1. and 2. of this rule apply to actuals PALs.

1. PAL effective period. The Director shall specify a PAL effective period of 10 years.

2. Reopening of the PAL permit.

(i) During the PAL effective period, the Director must reopen the PAL permit to:

(I) Correct typographical/calculation errors made in setting the PAL or reflect a more accurate determination of emissions used to establish the PAL;

(II) Reduce the PAL if the owner or operator of the major stationary source creates creditable emissions reductions for use as offsets under rule 335-3-14-.5 of this chapter; and

(III) Revise the PAL to reflect an increase in the PAL as provided under subparagraph (23)(k) of this rule.

(ii) The Director shall have discretion to reopen the PAL permit for the following:

(I) Reduce the PAL to reflect newly applicable Federal requirements (for example, NSPS) with compliance dates after the PAL effective date;

(II) Reduce the PAL consistent with any other requirement, that is enforceable as a practical matter, and is required by these regulations; and

(III) Reduce the PAL if the Director determines that a reduction is necessary to avoid causing or contributing to a NAAQS or PSD increment violation, or to an adverse impact on a published air quality related value that has been identified for a Federal Class I area by a Federal Land Manager and for which information is available to the general public.

(iii) Except for the permit reopening in subparagraph (23)(h)2.(i)(I) of this rule for the correction of typographical/calculation errors that do not increase the PAL level, all other reopenings shall be carried out in accordance with the public participation requirements of subparagraph (23)(e) of this rule.

(i) Expiration of a PAL. Any PAL that is not renewed in accordance with the procedures in subparagraph (23)(j) of this rule shall expire at the end of the

PAL effective period, and the requirements in subparagraphs (23)(i)1. through 5. of this rule shall apply.

1. Each emissions unit (or each group of emissions units) that existed under the PAL shall comply with an allowable emission limitation under a revised permit established according to the procedures in subparagraphs (23)(i)1.(i) and (ii) of this rule.

(i) Within the time frame specified for PAL renewals in subparagraph (23)(j)2. of this rule, the major stationary source shall submit a proposed allowable emission limitation for each emissions unit (or each group of emissions units, if such a distribution is more appropriate as decided by the Director) by distributing the PAL allowable emissions for the major stationary source among each of the emissions units that existed under the PAL. If the PAL had not yet been adjusted for an applicable requirement that became effective during the PAL effective period, as required under subparagraph (23)(j)5. of this rule, such distribution shall be made as if the PAL had been adjusted.

(ii) The Director shall decide whether and how the PAL allowable emissions will be distributed and issue a revised permit incorporating allowable limits for each emissions unit, or each group of emissions units, as the Director determines is appropriate.

2. Each emissions unit(s) shall comply with the allowable emission limitation on a 12-month rolling basis. The Director may approve the use of monitoring systems (source testing, emission factors, etc.) other than CEMS, CERMS, PEMS, or CPMS to demonstrate compliance with the allowable emission limitation.

3. Until the Director issues the revised permit incorporating allowable limits for each emissions unit, or each group of emissions units, as required under subparagraph (23)(i)1.(ii) of this rule, the source shall continue to comply with a source-wide, multi-unit emissions cap equivalent to the level of the PAL emission limitation.

4. Any physical change or change in the method of operation at the major stationary source will be subject to major NSR requirements if such change meets the definition of major modification in subparagraph (2)(b) of this rule.

5. The major stationary source owner or operator shall continue to comply with any State or Federal applicable requirements (BACT, RACT, NSPS, synthetic minor limit, etc.) that may have applied either during the PAL effective period or prior to the PAL effective period.

(j) <u>Renewal of a PAL.</u>

1. The Director shall follow the procedures specified in subparagraph (23)(e) of this rule in approving any request to renew a PAL for a major stationary source, and shall provide both the proposed PAL level and a written rationale for the proposed PAL level to the public for review and comment. During such public

review, any person may propose a PAL level for the source for consideration by the Director.

2. Application deadline. A major stationary source owner or operator shall submit a timely application to the Director to request renewal of a PAL. A timely application is one that is submitted at least 6 months prior to, but not earlier than 18 months from, the date of permit expiration. This deadline for application submittal is to ensure that the permit will not expire before the permit is renewed. If the owner or operator of a major stationary source submits a complete application to renew the PAL within this time period, then the PAL shall continue to be effective until the revised permit with the renewed PAL is issued.

3. Application requirements. The application to renew a PAL permit shall contain the information required in subparagraphs (23)(j)3.(i) through (iv) of this rule.

(i) The information required in subparagraphs (23)(c)1. through 3. of this rule.

(ii) A proposed PAL level.

(iii) The sum of the potential to emit of all emissions units under the PAL (with supporting documentation).

(iv) Any other information the owner or operator wishes the Director to consider in determining the appropriate level for renewing the PAL.

4. PAL adjustment. In determining whether and how to adjust the PAL, the Director shall consider the options outlined in subparagraphs (23)(j)4.(i) and (ii) of this rule. However, in no case may any such adjustment fail to comply with subparagraph (23)(j)4.(iii) of this rule.

(i) If the emissions level calculated in accordance with subparagraph (23)(f) of this rule is equal to or greater than 80 percent of the PAL level, the Director may renew the PAL at the same level without considering the factors set forth in subparagraph (23)(j)4.(ii) of this rule; or

(ii) The Director may set the PAL at a level that he or she determines to be more representative of the source's baseline actual emissions, or that he or she determines to be more appropriate considering air quality needs, advances in control technology, anticipated economic growth in the area, desire to reward or encourage the source's voluntary emissions reductions, or other factors as specifically identified by the Director in his or her written rationale.

(iii) Notwithstanding subparagraphs (23)(j)4.(i) and (ii) of this rule:

(I) If the potential to emit of the major stationary source is less than the PAL, the Director shall adjust the PAL to a level no greater than the potential to emit of the source; and

(II) The Director shall not approve a renewed PAL level higher than the

current PAL, unless the major stationary source has complied with the provisions of subparagraph (23)(k) of this rule (increasing a PAL).

5. If the compliance date for a State or Federal requirement that applies to the PAL source occurs during the PAL effective period, and if the Director has not already adjusted for such requirement, the PAL shall be adjusted at the time of PAL permit renewal or title V permit renewal, whichever occurs first.

(k) Increasing a PAL during the PAL effective period.

1. The Director may increase a PAL emission limitation only if the major stationary source complies with the provisions in subparagraphs (23)(k)1.(i) through(iv) of this rule.

(i) The owner or operator of the major stationary source shall submit a complete application to request an increase in the PAL limit for a PAL major modification. Such application shall identify the emissions unit(s) contributing to the increase in emissions so as to cause the major stationary source's emissions to equal or exceed its PAL.

(ii) As part of this application, the major stationary source owner or operator shall demonstrate that the sum of the baseline actual emissions of the small emissions units, plus the sum of the baseline actual emissions of the significant and major emissions units assuming application of BACT equivalent controls, plus the sum of the allowable emissions of the new or modified emissions unit(s) exceeds the PAL. The level of control that would result from BACT equivalent controls on each significant or major emissions unit shall be determined by conducting a new BACT analysis at the time the application is submitted, unless the emissions unit is currently required to comply with a BACT or LAER requirement that was established within the preceding 10 years. In such a case, the assumed control level for that emissions unit shall be equal to the level of BACT or LAER with which that emissions unit must currently comply.

(iii) The owner or operator obtains a major NSR permit for all emissions unit(s) identified in subparagraph (23)(k)1.(i) of this rule, regardless of the magnitude of the emissions increase resulting from them (that is, no significant levels apply). These emissions unit(s) shall comply with any emissions requirements resulting from the major NSR process (for example, BACT), even though they have also become subject to the PAL or continue to be subject to the PAL.

(iv) The PAL permit shall require that the increased PAL level shall be effective on the day any emissions unit that is part of the PAL major modification becomes operational and begins to emit the PAL pollutant.

2. The Director shall calculate the new PAL as the sum of the allowable emissions for each modified or new emissions unit, plus the sum of the baseline actual emissions of the significant and major emissions units (assuming application of BACT equivalent controls as determined in accordance with subparagraph (23)(k)1.(ii)), plus the sum of the baseline actual emissions of the

small emissions units.

3. The PAL permit shall be revised to reflect the increased PAL level pursuant to the public notice requirements of subparagraph (23)(e) of this rule.

(l) Monitoring requirements for PALs.

1. General requirements.

(i) Each PAL permit must contain enforceable requirements for the monitoring system that accurately determines plantwide emissions of the PAL pollutant in terms of mass per unit of time. Any monitoring system authorized for use in the PAL permit must be based on sound science and meet generally acceptable scientific procedures for data quality and manipulation. Additionally, the information generated by such system must meet minimum legal requirements for admissibility in a judicial proceeding to enforce the PAL permit.

(ii) The PAL monitoring system must employ one or more of the four general monitoring approaches meeting the minimum requirements set forth in subparagraphs (23)(l)2.(i) through (iv) of this rule and must be approved by the Director.

(iii) Notwithstanding subparagraph (23)(l)1.(ii) of this rule, an alternative monitoring approach that meets subparagraph (23)(l)1.(i) of this rule may be employed if approved by the Director.

(iv) Failure to use a monitoring system that meets the requirements of this rule renders the PAL invalid.

2. Minimum performance requirements for approved monitoring approaches. The following are acceptable general monitoring approaches when conducted in accordance with the minimum requirements in subparagraphs (23)(l)3. through 9. of this rule:

(i) Mass balance calculations for activities using coatings or solvents;

(ii) CEMS;

(iii) CPMS or PEMS; and

(iv) Emission factors.

3. Mass balance calculations. An owner or operator using mass balance calculations to monitor PAL pollutant emissions from activities using coating or solvents shall meet the following requirements:

(i) Provide a demonstrated means of validating the published content of the PAL pollutant that is contained in or created by all materials used in or at the emissions unit;

(ii) Assume that the emissions unit emits all of the PAL pollutant that is

contained in or created by any raw material or fuel used in or at the emissions unit, if it cannot otherwise be accounted for in the process; and

(iii) Where the vendor of a material or fuel, which is used in or at the emissions unit, publishes a range of pollutant content from such material, the owner or operator must use the highest value of the range to calculate the PAL pollutant emissions unless the Director determines there is site-specific data or a site-specific monitoring program to support another content within the range.

4. CEMS. An owner or operator using CEMS to monitor PAL pollutant emissions shall meet the following requirements:

(i) CEMS must comply with applicable Performance Specifications found in 40 CFR part 60, appendix B; and

(ii) CEMS must sample, analyze and record data at least every 15 minutes while the emissions unit is operating.

5. CPMS or PEMS. An owner or operator using CPMS or PEMS to monitor PAL pollutant emissions shall meet the following requirements:

(i) The CPMS or the PEMS must be based on current site-specific data demonstrating a correlation between the monitored parameter(s) and the PAL pollutant emissions across the range of operation of the emissions unit; and

(ii) Each CPMS or PEMS must sample, analyze, and record data at least every 15 minutes, or at another less frequent interval approved by the Director, while the emissions unit is operating.

6. Emission factors. An owner or operator using emission factors to monitor PAL pollutant emissions shall meet the following requirements:

(i) All emission factors shall be adjusted, if appropriate, to account for the degree of uncertainty or limitations in the factors' development;

(ii) The emissions unit shall operate within the designated range of use for the emission factor, if applicable; and

(iii) If technically practicable, the owner or operator of a significant emissions unit that relies on an emission factor to calculate PAL pollutant emissions shall conduct validation testing to determine a site-specific emission factor within 6 months of PAL permit issuance, unless the Director determines that testing is not required.

7. A source owner or operator must record and report maximum potential emissions without considering enforceable emission limitations or operational restrictions for an emissions unit during any period of time that there is no monitoring data, unless another method for determining emissions during such periods is specified in the PAL permit.

8. Notwithstanding the requirements in subparagraphs (23)(l)3. through 7. of this rule, where an owner or operator of an emissions unit cannot demonstrate a correlation between the monitored parameter(s) and the PAL pollutant emissions rate at all operating points of the emissions unit, the Director shall, at the time of permit issuance:

(i) Establish default value(s) for determining compliance with the PAL based on the highest potential emissions reasonably estimated at such operating point(s); or

(ii) Determine that operation of the emissions unit during operating conditions when there is no correlation between monitored parameter(s) and the PAL pollutant emissions is a violation of the PAL.

9. Re-validation. All data used to establish the PAL pollutant must be re-validated through performance testing or other scientifically valid means approved by the Director. Such testing must occur at least once every 5 years after issuance of the PAL.

(m) Recordkeeping requirements.

1. The PAL permit shall require an owner or operator to retain a copy of all records necessary to determine compliance with any requirement of paragraph (23) of this rule and of the PAL, including a determination of each emissions unit's 12-month rolling total emissions, for 5 years from the date of such record.

2. The PAL permit shall require an owner or operator to retain a copy of the following records for the duration of the PAL effective period plus 5 years:

(i) A copy of the PAL permit application and any applications for revisions to the PAL; and

(ii) Each annual certification of compliance pursuant to title V and the data relied on in certifying the compliance.

(n) Reporting and notification requirements. The owner or operator shall submit semi-annual monitoring reports and prompt deviation reports to the Director in accordance with the applicable title V operating permit. The reports shall meet the requirements in subparagraphs (23)(n)1. through 3. of this rule.

1. Semi-annual report. This report shall contain the information required in subparagraphs (23)(n)1.(i) through (vii) of this rule.

(i) The identification of owner and operator and the permit number.

(ii) Total annual emissions (tons/year) based on a 12-month rolling total for each month in the reporting period recorded pursuant to subparagraph (23)(m)1. of this rule.

(iii) All data relied upon, including, but not limited to, any Quality

Assurance or Quality Control data, in calculating the monthly and annual PAL pollutant emissions.

(iv) A list of any emissions units modified or added to the major stationary source during the preceding 6-month period.

(v) The number, duration, and cause of any deviations or monitoring malfunctions (other than the time associated with zero and span calibration checks), and any corrective action taken.

(vi) A notification of a shutdown of any monitoring system, whether the shutdown was permanent or temporary, the reason for the shutdown, the anticipated date that the monitoring system will be fully operational or replaced with another monitoring system, and whether the emissions unit monitored by the monitoring system continued to operate, and the calculation of the emissions of the pollutant or the number determined by method included in the permit, as provided by (23)(l)7 of this rule.

(vii) A signed statement by a responsible official (as defined in chapter 16 of these Regulations) certifying the truth, accuracy, and completeness of the information provided in the report.

2. Deviation report. The major stationary source owner or operator shall promptly submit reports of any deviations or exceedance of the PAL requirements, including periods where no monitoring is available. A report submitted pursuant to 335-3-16-.05(c)3.(ii) shall satisfy this reporting requirement. The reports shall contain the following information:

(i) The identification of owner and operator and the permit number;

(ii) The PAL requirement that experienced the deviation or that was exceeded;

(iii) Emissions resulting from the deviation or the exceedance; and

(iv) A signed statement by a responsible official (as defined in chapter 16 of these Regulations) certifying the truth, accuracy, and completeness of the information provided in the report.

3. Re-validation results. The owner or operator shall submit to the Director the results of any re-validation test or method within 3 months after completion of such test or method.

(o) Transition requirements.

1. The Director may not issue a PAL that does not comply with the requirements in subparagraphs (23)(a) through(o) of this rule after the effective date of this rule.

2. The Director may supersede any PAL that was established prior to the

effective date of this rule with a PAL that complies with the requirements of subparagraphs (23)(a) through (o) of this rule.

(24) If any provision of this rule, or the application of such provision to any person or circumstance, is held invalid, the remainder of this rule, or the application of such provision to persons or circumstances other than those as to which it is held invalid, shall not be affected thereby.

Author: Marilyn G. Elliott; Ronald W. Gore.
Statutory Authority: Code of Alabama 1975, §§22-28-14, 22-22A-5, 22-22A-6, and 22-22A-8.
History: Effective Date: December 10, 1981. **Amended:** Effective: February 13, 1985. **Amended:** Effective: November 13, 1985. **Amended:** Effective: November 1, 1990. **Amended:** Effective: December 28, 1993. **Amended:** Effective: April 27, 1995. **Amended:** Effective: November 21, 1996. **Amended:** Effective: January 15, 1998. **Amended:** Effective: May 20, 1999. **Amended:** Effective: September 7, 2000. **Amended:** Effective: March 14, 2002. **Amended:** Effective: July 11, 2006. **Amended:** Effective: January 18, 2011. **Amended:** Effective: May 23, 2011. **Amended:** Effective: May 29, 2012. **Amended:** Effective: May 28, 2013. **Amended:** Effective: November 25, 2014. **Amended:** Effective: June 2, 2017. **Amended:** Filed: August 21, 2018; Effective: October 5, 2018.

335-3-14-.05 Air Permits Authorizing Construction in or near Non-Attainment Areas

(1) Applicability.

(a) The requirements of this Rule apply to the construction of any new major stationary source (as defined in subparagraph (2)(a) of this Rule) or any project at an existing major stationary source in or near an area designated as nonattainment under sections 107(d) of the Clean Air Act for which the source or modification is major for the pollutant or its precursors for which the area is designated as nonattainment. If the source is not major for the pollutant or its precursors for which the area is designated as nonattainment, it shall comply with the requirements of 335-3-14-.04 which would be applicable if the area were classified as attainment or unclassifiable under sections 107(d)(1)(A)(ii) or (iii) of the Clean Air Act.

(b) The requirements of paragraphs (3) through (17) of this Rule apply to the construction of any new major stationary source or the major modification of any existing major stationary source, except as this Rule otherwise provides.

(c) No new major stationary source or major modification to which the requirements of paragraphs (3) through (17)(c) of this Rule apply shall begin construction without a permit that states that the major stationary source or major modification will meet those requirements.

(d) Except as otherwise provided in subparagraph (1)(j) of this Rule, and consistent with the definition of major modification contained in subparagraph

(2)(b) of this Rule, a project is a major modification for a regulated NSR pollutant only if it causes two types of emissions increases – a significant emissions increase (as defined in subparagraph (2)(mm) of this Rule), and a significant net emissions increase (as defined in subparagraphs (2)(c) and (2)(w) of this Rule).

(e) Before beginning actual construction, the procedure for calculating whether a significant emissions increase will occur depends upon the type of emissions units being modified, according to subparagraphs (1)(f) through (i) of this Rule. The procedure for calculating whether a significant net emissions increase will occur at the major stationary source is contained in the definition in subparagraphs (2)(c) and (2)(w) of this Rule. Regardless of any such preconstruction projections, a major modification can result only if the project causes a significant emissions increase and a significant net emissions increase.

(f) Actual-to-projected-actual applicability test for projects that only involve existing emissions units. A significant emissions increase of a regulated NSR pollutant is projected to occur if the sum of the difference(s) between the projected actual emissions (as defined in subparagraph (2)(nn) of this Rule) and the baseline actual emissions (as defined in subparagraphs (2)(uu)1. and 2. of this Rule), for each existing emissions unit, equals or exceeds the significant rate for that pollutant (as defined in subparagraph (2)(w) of this Rule).

(g) Actual-to-potential test for projects that only involve construction of a new emissions unit(s). A significant emissions increase of a regulated NSR pollutant is projected to occur if the sum of the difference between the potential to emit (as defined in subparagraph (2)(d) of this Rule) from each new emissions unit following completion of the project and the baseline actual emissions (as defined in subparagraph (2)(uu)3. of this Rule) of these units before the project equals or exceeds the significant rate for that pollutant (as defined in subparagraph (2)(w) of this Rule).

(h) Actual-to-potential test for projects that only involve existing emissions units. A significant emissions increase of a regulated NSR pollutant is projected to occur if the sum of the difference(s) between the potential to emit (as defined in subparagraph (2)(d) of this Rule) and the actual emissions (as defined in subparagraph (2)(u) of this Rule), for each existing emissions unit, equals or exceeds the significant rate for that pollutant (as defined in subparagraph (2)(w) of this Rule).

(i) Hybrid test for projects that involve multiple types of emissions units. A significant emissions increase of a regulated NSR pollutant is projected to occur if the sum of the emissions increases for each emissions unit, using the method specified in subparagraphs (1)(f) through (h) of this Rule as applicable with respect to each emissions unit, for each type of emissions unit equals or exceeds the significant rate for that pollutant (as defined in subparagraph (2)(w) of this Rule).

(j) Any major stationary source subject to a plantwide applicability limit (PAL), as defined in subparagraph (23)(b)5. of this Rule, for a regulated NSR pollutant shall comply with the requirements under paragraph (23) of this Rule.

(k) The fugitive emissions of a stationary source shall not be included in determining for any purposes of this Rule whether it is a major stationary source or major modification unless the source belongs to one of the following categories of stationary sources:

- Coal cleaning plants (with Thermal dryers);
- Kraft pulp mills;
- Portland cement plants;
- Primary zinc smelters;
- Iron and steel mills;
- Primary aluminum ore reduction plants;
- Primary copper smelters;
- Municipal incinerators capable of charging more than 250 tons of refuse per day;
- Hydrofluoric, sulfuric, or nitric acid plants;
- Petroleum refineries;
- Lime plants;
- Phosphate rock processing plants;
- Coke oven batteries;
- Sulfur recovery plants;
- Carbon black plants (furnace process);
- Primary lead smelters;
- Fuel conversion plants;
- Sintering plants;
- Secondary metal production plants;
- Chemical processing plants (excluding ethanol production facilities that produce ethanol by natural fermentation);
- Fossil fuel boilers (or combination thereof) totaling more than 250 million British thermal units per hour of heat input.

- Petroleum storage and transfer units with a total storage capacity exceeding 300,000 barrels;
- Taconite ore processing plants;
- Glass fiber processing plants;
- Charcoal production plants;
- Fossil fuel fired steam electric plants of more than 250 British thermal units per hour heat input; and
- Any other stationary source category which, as of August 7, 1980, is being regulated under section 111 or 112 of the Clean Air Act.

(2) Definitions. For the purposes of this Rule only, the following terms will have meanings ascribed in this paragraph:

(a) "Major Stationary Source" shall mean:

1. Any stationary source [see subparagraph (e) of this paragraph] that emits, or has the potential to emit [see subparagraph (d) of this paragraph] air pollutants at or above one or more of the following applicable thresholds:

Nonattainment Area Classification	**NO_x**	**VOC**	**CO**	**SO_2**	**PM_{10}**	**$PM_{2.5}$**
	All values expressed in tons per year (TPY)					
Ozone: Marginal and Moderate	100	100				
Ozone: Serious	50	50				
Ozone: Severe	25	25				
Ozone: Extreme	10	10				
CO (Other than Serious)			100			

Nonattainment Area Classification	**NO_x**	**VOC**	**CO**	**SO_2**	**PM_{10}**	**$PM_{2.5}$**
	All values expressed in tons per year (TPY)					
CO: Serious, where stationary sources do not contribute significantly to CO levels			100			
CO: Serious, where stationary sources do contribute significantly to CO levels			50			
PM_{10} (Other than Serious)					100	
PM_{10}: Serious					70	
$PM_{2.5}$	100			100		100
SO_2				100		
NO_x	100					

2. Any physical change that would occur at a stationary source not otherwise qualifying under this Rule as a major stationary source, if the changes

would constitute a major stationary source by itself.

3. A stationary source that is considered major for VOC or NOx shall be considered major for ozone.

(b) "Major Modification" shall mean any physical change in or change in the method of operation of a major stationary source that would result in a significant [see subparagraph (w) of this paragraph] net emissions increase [see subparagraph (c) of this paragraph] of any regulated NSR pollutant.

1. Any net emissions increase that is significant for VOC or NOx shall be considered significant for ozone.

2. A physical change or change in the method of operation shall not include:

(i) Routine maintenance, repair and replacement;

(ii) Use of an alternative fuel or raw material by reason of an order under Sections 2(a) and (b) of the Energy Supply and Environmental Coordination Act of 1974 (P.L. 93-319, 15 U.S.C. 791 note) or any superseding legislation, or by reason of a natural gas curtailment plan pursuant to the Federal Power Act (June 10, 1920, P.L. 280, 16 U.S.C. 791a);

(iii) Use of an alternative fuel by reason of an order or rule under Section 125 of the CAA;

(iv) Use of an alternative fuel at a steam generating unit to the extent that the fuel is generated from municipal solid waste;

(v) Use of an alternative fuel or raw material by a stationary source which:

(I) The source was capable of accommodating before December 21, 1976, unless such change would be prohibited under any enforceable permit condition which was established after December 21, 1976.

(II) The source is approved to use under any permit issued under the Federal Prevention of Significant Deterioration ("PSD") regulations (40 CFR 52.21) or under regulations of this Chapter;

(vi) An increase in the hours of operation or in the production rate, unless such change would be prohibited under any enforceable permit condition which was established after December 21, 1976.

(vii) Any change in ownership at a stationary source.

(viii) Reserved.

(ix) The installation, operation, cessation, or removal of a temporary clean coal technology demonstration project, provided that the project complies with

requirements necessary to attain and maintain the national ambient air quality standards during the project and after it is terminated.

3. This definition shall not apply with respect to a particular regulated NSR pollutant when the major stationary source is complying with the requirements under paragraph (23) of this Rule for a PAL for that pollutant. Instead, the definition at subparagraph (23)(b)8. of this Rule shall apply.

(c) "Net Emissions Increase" shall mean with respect to any regulated NSR pollutant, the amount by which the sum of the following exceeds zero:

1. Any increase in emissions as calculated pursuant to subparagraphs (1)(e) through (i) of this Rule from a particular physical change or change in method of operation at a stationary source; and

2. Any other increases and decreases in actual emissions at a major stationary source that are contemporaneous with the particular change and are otherwise creditable. Baseline actual emissions for calculating increases and decreases under this subparagraph shall be determined as provided in subparagraph (2)(uu) of this Rule, except that subparagraphs (2)(uu)1.(iii) and (2)(uu)2.(iv) of this Rule shall not apply.

(i) An increase or decrease in actual emissions is contemporaneous with the increase from the particular change only if it occurs between:

(I) The date up to five (5) years before construction [see subparagraph (h) of this paragraph] on the particular change commences [see subparagraph (i) of this paragraph]; and

(II) The date that the increase from the particular change occurs.

(ii) An increase or decrease in actual emissions is creditable only if the Director has not relied on it in issuing a permit for the source under this Rule, which is in effect when the increase in actual emissions from the particular change occurs.

(iii) With respect to particulate matter, only PM_{10} and $PM_{2.5}$ emissions can be used to evaluate the net emissions increase for PM_{10}. Only $PM_{2.5}$ emissions can be used to evaluate the net emissions increase for $PM_{2.5}$.

(iv) An increase in actual emissions is creditable only to the extent that the new level of actual emissions exceeds the old level.

(v) A decrease in actual emissions is creditable only to the extent that:

(I) The old level of actual emissions or the old level of allowable emissions [see subparagraph (p) of this paragraph], whichever is lower, exceeds the new level of actual emissions;

(II) It is enforceable [see subparagraph (q) of this paragraph], at and after the time that actual construction on the particular change begins; and

(III) It has approximately the same qualitative significance for public health and welfare as that attributed to the increase from the particular change.

(IV) The Director has not relied upon the decrease in demonstrating attainment or reasonable further progress.

(vi) An increase that results from a physical change at a source occurs when the emissions unit on which construction occurred becomes operational and begins to emit a particular pollutant. Any replacement unit that requires shakedown becomes operational only after a reasonable shakedown period, not to exceed 180 days.

3. Fugitive emission increases and decreases are not creditable for those emissions units located at a facility whose primary activity is not listed in 335-3-14-.05(1)(k) and for which the unit, itself, is not part of a listed source category in 335-3-14-.05(1)(k).

(d) "Potential to Emit" shall mean the maximum capacity of a stationary source to emit a pollutant under its physical and operational design. Any physical or operational limitation on the capacity of the source to emit a pollutant, including air pollution control equipment and restrictions on hours of operation or on the type or amount of material combusted, stored, or processed, shall be treated as part of its design if the limitation or the effect it would have on emissions is enforceable. Secondary emissions as defined in subparagraph (2)(r) of this Rule do not count in determining the potential to emit of a stationary source.

(e) "Stationary Source" shall mean any building, structure, facility, or installation which emits or may emit a regulated NSR pollutant.

(f) "Building, Structure, Facility, or Installation" shall mean all of the pollutant-emitting activities which belong to the same industrial grouping, are located on one or more contiguous or adjacent properties, and are under the control of the same person (or persons under common control). Pollutant-emitting activities shall be considered as part of the same industrial grouping if they belong to the same "Major Group" (i.e., all have the same two digit code) as described in the Standard Industrial Classification Manual.

(g) "Emissions Unit" shall mean any part of a stationary source which emits or would have the potential to emit any regulated NSR pollutant including an electric utility steam generating unit as defined in subparagraph (2)(vv) of this Rule. For purposes of this Rule, there are two types of emissions units as described in subparagraphs (2)(g)1. and 2. of this Rule.

1. A new emissions unit is any emissions unit that is (or will be) newly constructed and that has existed for less than 2 years from the date such emissions unit first operated.

2. An existing emissions unit is any emissions unit that does not meet the requirements in subparagraph (2)(g)1. of this Rule.

(h) "Construction" shall mean any physical change or change in the method of operation (including fabrication, erection, installation, demolition, or modification of an emissions unit) which would result in a change in emissions.

(i) "Commence" as applied to construction of a major stationary source or major modification shall mean that the owner or operator has all necessary preconstruction approvals or permits [see subparagraph (2)(j) of this Rule] and either has:

1. Begun, or caused to begin, a continuous program of actual on-site construction [see subparagraph (2)(k) of this Rule] of the source, to be completed within a reasonable time; or

2. Entered into binding agreements or contractual obligations, which cannot be canceled or modified without substantial loss to the owner or operator, to undertake a program of actual construction of the source to be completed within a reasonable time.

(j) "Necessary Preconstruction Approvals or Permits" shall mean those permits or approvals required under Alabama air quality control laws and regulations which are part of the State Implementation Plan.

(k) "Begin Actual Construction" shall mean, in general, initiation of physical on-site construction activities on an emissions unit which are of a permanent nature. Such activities include, but are not limited to, installation of building supports and foundations, laying underground pipework, and construction of permanent storage structures. With respect to a change in method of operations, this term refers to those on-site activities other than preparatory activities which mark the initiation of the change.

(l) "Best Available Control Technology (BACT)" shall mean an emissions limitation (including a visible emission standard) based on the maximum degree of reduction for each regulated NSR pollutant which would be emitted from any proposed major stationary source or major modification which the Director, on a case-by-case basis, taking into account energy, environmental, and economic impacts and other costs, determines is achievable for such source or modification through application of production processes or available methods, systems and techniques, including fuel cleaning or treatment or innovative fuel combustion techniques for control of such pollutant. In no event shall application of BACT result in emissions of any pollutant which would exceed the emissions allowed by any applicable standard under 40 CFR Parts 60 or 61. If the Director determines that technological or economic limitations on the application of measurement methodology to a particular emissions unit would make the imposition of an emissions standard infeasible, a design, equipment, work practice, operational standard, or combination thereof may be prescribed instead to satisfy the requirement for the application of BACT. Such standard shall, to the degree possible, set forth the emissions reduction achievable by implementation of such design, equipment, work practice, or operation and shall provide for compliance by means which achieve equivalent results.

(m) "Lowest achievable emission rate" (LAER) shall mean, for any source, the more stringent rate of emissions based on the following:

1. The most stringent emissions limitation which is contained in the implementation plan of any State for such class or category of stationary source, unless the owner or operator of the proposed stationary source demonstrates that such limitations are not achievable; or

2. The most stringent emissions limitation which is achieved in practice by such class or category of stationary sources. This limitation, when applied to a modification, means the lowest achievable emissions rate for the new or modified emissions units within a stationary source. In no event shall the application of the term allow a new or modified stationary source to emit any pollutant in excess of the amount allowable under an applicable new source standard of performance.

(n) Reserved.

(o) Reserved.

(p) "Allowable Emissions" shall mean the emissions rate of a stationary source calculated using the maximum rated capacity of the source (unless the source is subject to enforceable limits which restrict the operating rate, the hours of operation, or both) and the most stringent of the following:

1. The applicable standards as set forth in 40 CFR Parts 60, 61, or 63;

2. The applicable State Implementation Plan emissions limitation, including those with a future compliance date; or

3. The emissions rate specified as an enforceable permit condition, including those with a future compliance date.

(q) "Enforceable" shall mean all limitations and conditions which are enforceable, including those requirements developed pursuant to 40 CFR Parts 60, 61, and 63, requirements within the State Implementation Plan, and any permit requirements established pursuant to Chapters 14, 15, or 16 of these regulations.

(r) "Secondary Emissions" shall mean emissions which would occur as a result of the construction or operation of a major stationary source or major modification, but do not come from the major stationary source or major modification itself. For the purpose of this Rule, secondary emissions must be specific, well defined, quantifiable, and impact the same general area as the stationary source or modification which causes the secondary emissions. Secondary emissions include emissions from any off-site support facility which would not otherwise be constructed or increase its emissions as a result of the construction or operation of the major stationary source or major modification. Secondary emissions do not include any emissions which come directly from a mobile source such as emissions from the tailpipe of a motor vehicle, from a train, or

from a vessel.

(s) "Innovative Control Technology" shall mean any system of air pollution control that has not been adequately demonstrated in practice, but would have a substantial likelihood of achieving greater continuous emissions reduction than any control system in current practice or of achieving at least comparable reductions at lower cost in terms of energy, economics, or non-air quality environmental impacts.

(t) "Fugitive Emissions" shall mean those emissions which could not reasonably pass through a stack, chimney, vent, roof monitor, or other functionally equivalent opening.

(u) "Actual Emissions" shall mean the actual rate of emissions of a regulated NSR pollutant from an emissions unit, as determined in accordance with subparagraphs (u)1. through (u)3. below, except that this definition shall not apply for establishing a PAL under paragraph (23) of this Rule. Instead, subparagraphs (2)(nn) and (2)(uu) of this Rule shall apply for this purpose.

1. In general, actual emissions as of any given date shall equal the average rate, in tons per year, at which the unit actually emitted the pollutant during a consecutive 24-month period which precedes the given data and which is representative of normal source operation. The Director shall allow the use of a different time period upon a determination that it is more representative of normal source operation. Actual emissions shall be calculated using the unit's actual operating hours, production rates, and types of materials processed, stored, or combusted during the selected time period.

2. The Director may presume that source-specific allowable emissions for the unit are equivalent to the actual emissions of the unit.

3. For any emissions unit which has not begun normal operations on the given date as determined in subparagraph (u)1. above, actual emissions shall equal the potential to emit of the unit on that date.

(v) "Complete" shall mean, in reference to an application for a permit, that the application contains all of the information necessary for processing the application.

(w) "Significant" shall mean, in reference to an emissions increase or a net emissions increase or the potential of a source to emit any of the following pollutants, a rate of emissions that would equal or exceed any of the following rates:

Pollutant	Emissions Rate (tons per year)
Carbon monoxide Marginal and Moderate Nonattainment Areas..... Serious Nonattainment Areas.....	 100 50*
Nitrogen oxides.....	40
Sulfur dioxide.....	40
PM_{10}	15
$PM_{2.5}$.....	10 (of direct $PM_{2.5}$) 40 (of SO_2 or NOx)
Ozone Marginal and Moderate Nonattainment Areas..... Serious and Severe Nonattainment Areas..... Extreme Nonattainment Areas	 40 (of VOC or NOx) 25 (of VOC or NOx) Any (of VOC or NOx)
Lead..	0.6

* The significant emission rate of 50 tons for carbon monoxide in serious nonattainment areas shall only apply if the Director has made a determination that stationary sources significantly contribute to the carbon monoxide levels in the area.

(x) "Federal Land Manager" shall mean, with respect to any lands in the United States, the Secretary of the department with authority over such lands.

(y) "Nonattainment Area" shall mean any area designated by EPA as nonattainment for any national ambient air quality standard under Subpart C of 40 CFR part 81.301.

(z) Reserved.

(aa) Reserved.

(bb) Reserved.

(cc) Reserved.

(dd) Reserved.

(ee) Reserved.

(ff) Reserved.

(gg) "Pollution Prevention Projects" shall mean any activity that through process changes, product reformulation or redesign, or substitution of less polluting raw materials, eliminates or reduces the release of air pollutants (including fugitive emissions) and other pollutants to the environment prior to recycling, treatment, or disposal. It does not mean recycling (other than certain "in-process recycling" practices), energy recovery, treatment, or disposal.

(hh) "Clean coal technology" shall mean any technology, including technologies applied at the precombustion, combustion, or post combustion stage, at a new or existing facility which will achieve significant reductions in air emissions of sulfur dioxide or oxides of nitrogen associated with the utilization of coal in the generation of electricity, or process steam which was not in widespread use as of November 15, 1990.

(ii) "Clean coal technology demonstration project" shall mean a project using funds appropriated under the heading "Department of Energy-Clean Coal Technology", up to a total amount of $2,500,000,000 for commercial demonstration of clean coal technology, or similar projects funded through appropriations for the Environmental Protection Agency. The Federal contribution for a qualifying project shall be at least 20 percent of the total cost of the demonstration project.

(jj) "Temporary clean coal technology demonstration project" shall mean a clean coal technology demonstration project that is operated for a period of 5 years or less, and which complies with the State implementation plans for the State in which the project is located and other requirements necessary to attain and maintain the national ambient air quality standards during the project and after it is terminated.

(kk) "Repowering" shall mean replacement of an existing coal-fired boiler with one of the following clean coal technologies: atmospheric or pressurized fluidized bed combustion, integrated gasification combined cycle, magnetohydrodynamics, direct and indirect coal-fired turbines, integrated gasification fuel cells, or as determined by the Administrator, in consultation with the Secretary of Energy, a derivative of one or more of these technologies, and any other technology capable of controlling multiple combustion emissions simultaneously with improved boiler or generation efficiency and with significantly greater waste reduction relative to the performance of technology in widespread commercial use as of November 15, 1990.

1. Repowering shall also include any oil and/or gas-fired unit which has been awarded clean coal technology demonstration funding as of January 1, 1991, by the Department of Energy.

(ll) Reserved.

(mm) "Significant emissions increase" shall mean, for a regulated NSR pollutant, an increase in emissions that is significant (as defined in subparagraph (2)(w) of this Rule) for that pollutant.

(nn) "Projected actual emissions" shall mean

1. The maximum annual rate, in tons per year, at which an existing emissions unit is projected to emit a regulated NSR pollutant in any one of the 5 years (consecutive 12-month period) following the date the unit resumes regular operation after the project, or in any one of the 10 years following that date, if the project involves increasing the emissions unit's design capacity or its potential to emit that regulated NSR pollutant and full utilization of the unit would result in a significant emissions increase or a significant net emissions increase at the major stationary source.

2. In determining the projected actual emissions under subparagraph (2)(nn)1. of this Rule (before beginning actual construction), the owner or operator of the major stationary source:

(i) Shall consider all relevant information, including but not limited to, historical operational data, the company's own representations, the company's expected business activity and the company's highest projections of business activity, the company's filings with the State or Federal regulatory authorities, and compliance plans under these regulations; and

(ii) Shall include fugitive emissions to the extent quantifiable, if appropriate under 335-3-14-.05(1)(k), and emissions associated with startups and shutdowns; and

(iii) Shall exclude, in calculating any increase in emissions that results from the particular project, that portion of the unit's emissions following the project that an existing unit could have accommodated during the consecutive 24-month period used to establish the baseline actual emissions under subparagraph (2)(uu) of this Rule and that are not resulting from the particular project, including any increased utilization due to product demand growth; or

(iv) In lieu of using the method set out in subparagraphs (2)(nn)2.(i) through (iii), may elect to use the emissions unit's potential to emit, in tons per year, as defined under subparagraph (2)(d) of this Rule.

(oo) "Nonattainment Major new source review (NSR) program" shall mean the preconstruction permit program in this Rule. Any permit issued under this program is a major NSR permit.

(pp) "Prevention of Significant Deterioration (PSD) program" shall mean the preconstruction permit program in 335-3-14-.04. Any permit issued under this program is a major NSR permit.

(qq) "Continuous emissions monitoring system (CEMS)" shall mean all of the equipment that may be required to meet the data acquisition and availability requirements of this Rule, to sample, condition (if applicable), analyze, and provide a record of emissions on a continuous basis.

(rr) "Predictive emissions monitoring system (PEMS)" shall mean all of the equipment necessary to monitor process and control device operational parameters (for example, control device secondary voltages and electric currents) and other information (for example, gas flow rate, O_2 or CO_2 concentrations), and calculate and record the mass emissions rate (for example, lb/hr) on a continuous basis.

(ss) "Continuous parameter monitoring system (CPMS)" shall mean all of the equipment necessary to meet the data acquisition and availability requirements of this Rule, to monitor process and control device operational parameters (for example, control device secondary voltages and electric currents) and other information (for example, gas flow rate, O_2 or CO_2 concentrations), and to record average operational parameter value(s) on a continuous basis.

(tt) "Continuous emissions rate monitoring system (CERMS)" shall mean the total equipment required for the determination and recording of the pollutant mass emissions rate (in terms of mass per unit of time).

(uu) "Baseline actual emissions" shall mean the rate of emissions, in tons per year, of a regulated NSR pollutant, as determined in accordance with subparagraphs (2)(uu)1. through 4. of this Rule.

1. For any existing electric utility steam generating unit, baseline actual emissions means the average rate, in tons per year, at which the unit actually emitted the pollutant during any consecutive 24-month period selected by the owner or operator within the 5-year period immediately preceding when the owner or operator begins actual construction of the project. The Director may allow the use of a different time period upon a determination that it is more representative of normal source operation.

(i) The average rate shall include fugitive emissions to the extent quantifiable, if appropriate under 335-3-14-.05(1)(k), and emissions associated with startups and shutdowns.

(ii) The average rate shall be adjusted downward to exclude any non-compliant emissions that occurred while the source was operating above any emission limitation that was legally enforceable during the consecutive 24-month period.

(iii) For a regulated NSR pollutant, when a project involves multiple emissions units, only one consecutive 24-month period must be used to determine the baseline actual emissions for the emissions units being changed. A different consecutive 24-month period can be used for each regulated NSR pollutant.

(iv) The average rate shall not be based on any consecutive 24-month period for which there is inadequate information for determining annual emissions, in tons per year, and for adjusting this amount if required by subparagraph (2)(uu)1.(ii) of this Rule.

2. For an existing emissions unit (other than an electric utility steam generating unit), baseline actual emissions means the average rate, in tons per year, at which the emissions unit actually emitted the pollutant during any consecutive 24-month period selected by the owner or operator within the 10-year period immediately preceding either the date the owner or operator begins actual construction of the project, or the date a complete permit application is received by the Department for a permit required under this Rule, whichever is earlier.

(i) The average rate shall include fugitive emissions to the extent quantifiable, if appropriate under 335-3-14-.05(1)(k), and emissions associated with startups and shutdowns.

(ii) The average rate shall be adjusted downward to exclude any non-compliant emissions that occurred while the source was operating above an emission limitation that was legally enforceable during the consecutive 24-month period.

(iii) The average rate shall be adjusted downward to exclude any emissions that would have exceeded an emission limitation with which the major stationary source must currently comply, had such major stationary source been required to comply with such limitations during the consecutive 24-month period. However, if an emission limitation is part of a maximum achievable control technology standard that the Administrator proposed or promulgated under 40 CFR part 63, the baseline actual emissions need only be adjusted if the State has taken credit for such emissions reductions in an attainment demonstration or maintenance plan consistent with the requirements of 40 CFR§51.165(a)(3)(ii)(G).

(iv) For a regulated NSR pollutant, when a project involves multiple emissions units, only one consecutive 24-month period must be used to determine the baseline actual emissions for all the emissions units being changed. A different consecutive 24-month period can be used for each regulated NSR pollutant.

(v) The average rate shall not be based on any consecutive 24-month period for which there is inadequate information for determining annual emissions, in tons per year, and for adjusting this amount if required by subparagraphs (2)(uu)2.(ii) and (iii) of this Rule.

3. For a new emissions unit, as defined in subparagraph (2)(g)1. of this Rule, the baseline actual emissions for purposes of determining the emissions increase that will result from the initial construction and operation of such unit shall equal zero. During the first two years from the date which the emissions unit commenced operation, the baseline actual emissions shall equal the potential to emit for the unit. Thereafter, the unit will be considered an existing emissions unit and the baseline actual emissions will be determined in accordance with subparagraph (2)(uu)1. for an electric steam generating unit or subparagraph (2)(uu)2. for other emissions units.

4. For a PAL for a stationary source, the baseline actual emissions shall be

calculated for existing electric utility steam generating units in accordance with the procedures contained in subparagraph (2)(uu)1. of this Rule, for other existing emissions units in accordance with the procedures contained in subparagraph (2)(uu)2. of this Rule, and for a new emissions unit in accordance with the procedures contained in subparagraph (2)(uu)3. of this Rule.

(vv) "Electric utility steam generating unit" shall mean any steam electric generating unit that is constructed for the purpose of supplying more than one-third of its potential electric output capacity and more than 25 MW electrical output to any utility power distribution system for sale. Any steam supplied to a steam distribution system for the purpose of providing steam to a steam-electric generator that would produce electrical energy for sale is also considered in determining the electrical energy output capacity of the affected facility.

(ww) "Regulated NSR pollutant", for purposes of this Rule, shall mean the following:

1. Any pollutant for which a national ambient air quality standard has been promulgated and any constituents or precursors for such pollutants identified by the Administrator of EPA (*e.g.*, volatile organic compounds and NOx are precursors for ozone);

2. $PM_{2.5}$ and PM_{10} emissions shall include gaseous emissions from a source or activity which condense to form particulate matter at ambient temperatures. Such condensable particulate matter shall be accounted for in applicability determinations and in establishing emissions limitations for $PM_{2.5}$ and PM_{10}. Applicability determinations made prior to January 1, 2011 without accounting for condensable particulate matter shall not be considered invalid.

(xx) Reserved.

(yy) "Project" shall mean a physical change in, or change in the method of operation of, an existing major stationary source.

(zz) "Offset ratio" shall mean the ratio of total actual emissions reductions to total allowable emissions increases of such pollutant from the new source.

(aaa) "Significant Impact" shall mean the following significant levels would be exceeded in the portion of the designated nonattainment area where the ambient air quality standards are actually violated.

Pollutant	Annual	24-Hour	8-Hour	3-Hour	1-Hour
PM_{10}		5 μg/m³			
$PM_{2.5}$	0.3 μg/m³	1.2 μg/m³			
SO_2	1 μg/m³	5 μg/m³		25 μg/m³	
NO_2	1 μg/m³				
CO			0.5 mg/m³		2 mg/m³

(3) Permitting requirements. No Air Permit shall be issued for the construction of a new major source or the major modification of an existing source that is major for any pollutant or its precursors for which an area is nonattainment if the source or modification would be located in the nonattainment area or would be located outside the nonattainment area but have a significant impact on the nonattainment are unless the following conditions are met, as applicable:

(a) The applicant demonstrates that the new source or the major modification would meet an emission limitation that would represent the lowest achievable emission rate (LAER) for that source or facility;

(b) The applicant certifies that all existing major sources owned or operated by the applicant (or any entity controlling, controlled by, or under common control with that person) within the state of Alabama are in compliance with all applicable air emission limits or are on an acceptable compliance schedule; and

(c) The applicant demonstrates that emission reductions from existing source(s) in the area of the proposed source/major modification (whether or not under the same ownership) meet the offset requirements of paragraph (4) of this rule.

(d) Alternative Sites Analysis. An analysis of alternative sites, sizes, production processes, and environmental control techniques for such proposed source demonstrates that benefits of the proposed source significantly outweigh the environmental and social costs imposed as a result of its location, construction, or modification shall be required.

(e) Requirements for sources located outside of a nonattainment area. Any new major stationary source or major modification undergoing a PSD permitting review near a nonattainment area which has a significant impact, as defined in 335-3-14-.05(2)(aaa), on the nonattainment area shall either:

1. Obtain offsets from within the nonattainment area in accordance with the requirements in paragraph (4) of this Rule, or

2. Obtain emissions reductions in or near the nonattainment area which will, at a minimum, reduce the impact of the project to below the significant impact level. All emissions reductions must be calculated in accordance with the

requirements in paragraph (4) and be enforceable.

(f) The requirements of this Rule shall apply to all pollutants for which a nonattainment area has been designated as nonattainment and all precursors for those pollutants.

(g) Interpollutant trading may be utilized only for the purpose of satisfying offset requirements for $PM_{2.5}$. Emissions reductions may only be utilized once in determining allowable offsets, i.e. the same reductions in SO_2 may not be utilized to offset SO_2 increases and $PM_{2.5}$ increases. Any offsets utilized in interpollutant offset trading must meet the requirements of paragraph (4). Interpollutant offsets shall be determined based upon the following ratios:

1. 200 tons of NO_x to 1 ton of $PM_{2.5}$,

2. 1 ton of $PM_{2.5}$ to 200 tons of NO_x,

3. 40 tons of SO_2 to 1 ton of $PM_{2.5}$,

4. 1 ton of $PM_{2.5}$ to 40 tons of SO_2.

(h) Exemptions. Temporary emission sources, such as pilot plants and portable facilities which will be relocated outside of the nonattainment area after a short period of time, are exempt from the requirements of subparagraphs (3)(c) through (e) of this Rule.

(i) The total amount of increased emissions resulting from a major modification that must be offset, in tons per year, shall be determined by summing the difference between the allowable emissions after the modification, as defined in 335-3-14-.05(2)(p), and the actual emissions before the modification, as defined in 335-3-14-.05(2)(u), for each emissions unit.

(4) Offset Standards.

(a) Where the emissions limit under these regulations allows greater emissions than the potential to emit of the source, emissions offset credit will be allowed only for control below this potential;

(b) For an existing fuel combustion source, credit shall be based on the allowable emissions under these regulations for the type of fuel being burned at the time the application to construct is filed. If the existing source commits to switch to a cleaner fuel at some future date, emissions offset credit based on the allowable (or actual) emissions for the fuels involved is not acceptable, unless the permit is conditioned to require the use of a specified alternative control measure which would achieve the same degree of emissions reduction should the source switch back to a dirtier fuel at some later date

(c) Emissions reductions achieved by shutting down an existing emission unit or curtailing production or operating hours may be generally credited for offsets if they meet the following requirements:

1. Such reductions are surplus, permanent, quantifiable, and enforceable.

2. The shutdown or curtailment occurred after the last day of the base year for the SIP planning process. For purposes of this paragraph, the Director may choose to consider a prior shutdown or curtailment to have occurred after the last day of the base year if the projected emissions inventory used to develop the attainment demonstration explicitly includes the emissions from such previously shutdown or curtailed emission units. No credit may be given for shutdowns that occurred before August 7, 1977.

(d) Emissions reductions achieved by shutting down an existing emissions unit or curtailing production or operating hours and that do not meet the requirements in paragraph (4)(c)2. of this section may be generally credited only if:

1. The shutdown or curtailment occurred on or after the date the construction permit application is filed; or

2. The applicant can establish that the proposed new emissions unit is a replacement for the shutdown or curtailed emissions unit, and the emissions reductions achieved by the shutdown or curtailment are surplus, permanent, quantifiable, and enforceable.

(e) No emissions credit may be allowed for replacing one hydrocarbon compound with another of lesser reactivity, except for those compounds listed in Table 1 of EPA's "Recommended Policy on Control of Volatile Organic Compounds" (42 FR 35314, July 8, 1977; (This document is also available from Mr. Ted Creekmore, Office of Air Quality Planning and Standards, (MD–15) Research Triangle Park, NC 27711.))

(f) All emission reductions claimed as offset credit shall be federally enforceable;

(g) Credit for an emissions reduction can be claimed provided that the Department has not relied on it in issuing any permit under 335-3-14-.04 or .05 or has not relied on it in a demonstration of attainment or reasonable further progress.

(h) If a designated nonattainment area is projected to be an attainment area as part of an approved SIP control strategy by the new source start-up date, offsets would not be required if the new source would not cause a new violation.

(i) <u>Calculation of Emission Offsets.</u>

1. The following procedure shall be followed to calculate emission offsets:

(i) The source shall calculate average annual actual emissions, in tons per year (tpy), before the emission reduction using data from the 24-month period immediately preceding the reduction in emissions. With the Director's approval, the use of a different time period, not to exceed 10 years immediately preceding the reduction in emissions, may be allowed if the owner or operator of the source

documents that such period is more representative of normal source operation, but not prior to the base year inventory date, which is the last day of the two years preceding the date of nonattainment designation; and

(ii) The emission offsets created shall be calculated by subtracting the allowable emissions following the reduction from the average annual actual emissions prior to the reduction.

2. For any emissions unit that has been operating for a consecutive period of at least 12 months but less than 24 months on the base year inventory date, based on the unit's potential to emit, emissions shall be calculated equal to the amount needed to complete a 24 month period on the base year inventory date. The baseline for determining credit for emission offsets of any source shall be the allowable emissions of said source or the actual emissions of said source, not including any malfunctions, whichever is less.

(j) Location of offsetting emissions. Emission offsets shall be obtained from sources currently operating within the same designated nonattainment area as the new or modified stationary source. Emission offsets may be obtained from another nonattainment area with the Director's approval only if

1. The other area has an equal or higher nonattainment classification then the area in which the proposed source is located; and

2. Emissions from the other area contribute to a violation of the NAAQS in the nonattainment area in which the source is located.

(k) Emission offsetting ratios. Emission offsets shall be required in nonattainment areas in accordance with the following provisions:

1. Emissions increases in carbon monoxide (CO), nitrogen dioxide (NO_2), sulfur dioxide (SO_2), lead (Pb), and particulate matter (PM_{10} and $PM_{2.5}$) nonattainment areas shall be offset at a ratio greater than 1 to 1.

2. Emissions increases in ozone nonattainment areas shall be offset for volatile organic compounds (VOC) and nitrogen oxides (NOx) in accordance with the following:

(i) Marginal 1.1 to 1

(ii) Moderate 1.15 to 1

(iii) Serious 1.2 to 1

(iv) Severe 1.3 to 1

(v) Extreme 1.5 to 1

(5) Banking of Emission Offsets. Offsets approved after January 16, 1979, which exceed the requirement of reasonable further progress may be "banked" for future use; likewise, reductions in emissions from existing sources which exceed

the requirement of reasonable further progress may be "banked" for future use. The banking is subject to the following requirements:

(a) Application shall be made in writing to the Director, describing the emission offsets to be banked, such description to include location, source, and type of emissions.

(b) Emission offsets cannot be banked beyond the allowable emissions of said source or the existing emissions of said source, not including any malfunctions, whichever is less.

(c) Upon approval by the Director of said application, the banked emissions shall be credited to the facility submitting such application.

(d) No emission offsets banked in accordance with the provisions of this Paragraph shall be used unless written notice is provided to the Director thirty (30) days prior to submission of the necessary permit applications, to provide opportunity for review of the proposed use of the banked emission offsets.

(e) In the event that a determination is made that the banked emission offsets may not be used for the proposed construction, written notice shall be afforded the applicant, as provided in Rule 335-3-14-.02(3), herein.

(f) In the event that a determination under subparagraph (e) of this paragraph is made by the Director, construction may proceed if, and only if, emission offsets are obtained sufficient to satisfy the requirements of paragraph (4) of this Rule.

(g) Nothing contained in this Paragraph shall prohibit the transfer, assignment, sale, or otherwise complete disposition of said banked emission offsets, provided that written notice is provided to the Director, thirty (30) days prior to such disposition, describing in detail the recipient of the banked emissions.

(6) Area Classifications.

(a) The following area, which was in existence on August 7, 1977, shall be a Class I area and may not be redesignated:

1. The Sipsey Wilderness Area, located in Franklin, Winston, and Lawrence counties, Alabama.

(b) Any other area is initially designated Class II:

(7) Air Quality Models.

(a) All estimates of ambient concentrations required under this Rule shall be based on the applicable air quality models, data bases, and other requirements specified in the "Guideline on Air Quality Models". (U.S. Environmental Protection Agency, Office of Air Quality Planning and Standards, Research Triangle Park, NC 27711)

(8) Reserved.

(9) Control Technology Review.

(a) A major stationary source or major modification shall meet each applicable emissions limitation under the State Implementation Plan and each applicable limitation standard and standard of performance under 40 CFR Parts 60, 61, and 63.

(b) A new major stationary source shall apply LAER for each regulated NSR pollutant and precursors that it would have the potential to emit in significant amounts for which the area is designated as nonattainment.

(c) A major modification shall apply LAER for each regulated NSR pollutant and precursors for which it would result in a significant net emissions increase for which the area is designated as nonattainment. This requirement applies to each emissions unit at which a net emissions increase in the pollutant or precursors would occur as a result of a physical change or change in the method of operation in the unit.

(d) For phased construction projects, the determination of LAER shall be reviewed and modified as appropriate at the latest reasonable time which occurs no later than eighteen (18) months prior to commencement of construction of each independent phase of the project. At such time, the owner or operator of the applicable stationary source may be required to demonstrate the adequacy of any previous determination of LAER for the source.

(10) Reserved.

(11) Reserved.

(12) Air Quality Monitoring.

(a) Post-construction Monitoring. The owner or operator of a major stationary source or major modification shall, after construction of the stationary source or modification, conduct such ambient monitoring as the Director determines is necessary to determine the impact said source or modification may have, or is having, on air quality in any area.

(b) Operations of Monitoring Stations. The owner or operator of a major stationary source or major modification shall meet Federal monitoring quality assurance requirements during the operation of monitoring stations for purposes of satisfying this paragraph.

(c) Visibility Monitoring. The Director may require monitoring of visibility in any Federal Class I area near the proposed new stationary source or major modification for such purposes and by such means as the Director deems necessary and appropriate.

(13) Source Information. The owner or operator of a proposed source of

modification shall submit all information necessary to perform any analysis or to make any determination required under this Rule.

(a) Such information shall include:

1. A description of the nature, location, design capacity, and typical operating schedule of the source or modification, including specifications and drawings showing its design and plant layout;

2. A detailed schedule for construction of the source or modification;

3. A detailed description as to what system of continuous emission reduction is planned for the source or modification, emission estimates, and any other information necessary to determine that LAER would be applied.

(b) Upon request of the Director, the owner or operator shall also provide information on:

1. The air quality impact of the source or modification, including meteorological and topographical data necessary to estimate such impact; and

2. The air quality impacts and the nature and extent of any or all general commercial, residential, industrial, and other growth which has occurred since August 7, 1977, in the area the source or modification would affect.

(14) Reserved.

(15) Reserved.

(16) Public Participation.

(a) After receipt of an application for an Air Permit or any addition to such application, the Director shall advise the applicant of any deficiency in the application or in the information submitted. In the event of such a deficiency, the date of receipt of the application shall be, for the purpose of this Rule, the date on which the Director received all required information.

(b) Within one (1) year after receipt of a complete application, the Director shall make a final determination of the application. This involves performing the following actions in a timely manner:

1. Make a preliminary determination whether construction should be approved, approved with conditions, or disapproved.

2. Make available on the Department's web site a copy of all materials the applicant submitted, a copy of the preliminary determination and a copy or summary of other materials, if any, considered in making the preliminary determination.

3. Notify the public, by posting on the Department's web site for the duration of the comment period of 30 days, the preliminary determination, the

opportunity to comment on the proposed permit, how to request and/or attend a public hearing on the proposed permit, a copy of the proposed permit, and information on how to access the administrative record for the proposed permit.4. Send a copy of the notice of public comment to the applicant, to EPA, and to officials and agencies having cognizance over the location where the proposed construction would occur as follows: any other State or local air pollution control agencies, the chief executives of the city and county where the source or modification would be located, any comprehensive regional land use planning agency, and any State, Federal Land Manager, or Indian Governing Body whose lands may be affected by emissions from the source or modification.

5. Provide opportunity for a public hearing for interested persons to appear and submit written or oral comments on the air quality impact of the source or modification, alternatives to the source or modification, the control technology required, and other appropriate considerations.

6. Consider all written comments submitted within a time specified in the notice of public comment and all comments received at any public hearing(s) in making a final decision on the approvability of the application. No later than ten (10) days after the close of the public comment period, the applicant may, as part of the public record, submit a written response to any comments submitted by the public. The Director shall consider the applicant's response in making a final decision. The Director shall make all comments available for public inspection on the same web site where the Director made available preconstruction information relating to the proposed source or modification.

7. Make a final determination whether construction should be approved, approved with conditions, or disapproved pursuant to this Rule.

8. Notify the applicant in writing of the final determination and make such notification available for public inspection on the same web site where the Director made available preconstruction information and public comments relating to the source or modification.

(17) Source Obligation.

(a) An Air Permit authorizing construction shall become invalid if construction is not commenced within twenty-four (24) months after receipt of such approval, if construction is discontinued for a period of twenty-four (24) months or more, or if construction is not completed within a reasonable time. The Director may extend the twenty-four (24) month period upon satisfactory showing that an extension is justified. This provision does not apply to the time period between construction of the approved phases of a phased construction project; each phase must commence construction within twenty-four (24) months of the projected and approved commencement date.

(b) An Air Permit authorizing construction shall not relieve any owner or operator of the responsibility to comply fully with applicable provisions of the State Implementation Plan and any other requirements under local, State or Federal law.

(c) At such time that a particular source or modification becomes a major stationary source or major modification solely by virtue of a relaxation in any enforceable limitation which was established after August 7, 1980, on the capacity of the source or modification otherwise to emit a pollutant, such as a restriction on hours of operation, then the requirements of paragraphs (9) through (17) of this Rule shall apply to the source or modification as though construction had not yet commenced on the source or modification.

(d) The provisions of this subparagraph (17)(d) apply to projects at an existing emissions unit at a major stationary source (other than projects at a source with a PAL), that are not excluded from the definition of physical change or change in the method of operation, where there is not a reasonable possibility that the project is a part of a major modification and may result in a significant emissions increase and the owner or operator elects to use the method specified in subparagraphs (2)(nn)2.(i) through (iii) of this Rule for calculating projected actual emissions.

1. Before beginning actual construction of the project, the owner or operator shall document and maintain a record of the following information:

(i) A description of the project;

(ii) Identification of the emissions unit(s) whose emissions of a regulated NSR pollutant could be affected by the project; and

(iii) A description of the applicability test used to determine that the project is not a major modification for any regulated NSR pollutant, including the baseline actual emissions, the projected actual emissions, the amount of emissions excluded under subparagraph (2)(nn)2.(iii) of this Rule and an explanation for why such amount was excluded, and any netting calculations, if applicable.

2. The owner or operator of the source shall make the information required to be documented and maintained pursuant to subparagraph (17)(d) of this Rule available for review upon a request for inspection by the Department or the general public.

3. Nothing in this subparagraph shall be construed to exempt the owner or operator of such a unit from obtaining any minor source Air Permit in accordance with the requirements of this Chapter.

(e) The provisions of this subparagraph (17)(e) apply to projects at an existing emissions unit at a major stationary source (other than projects at a source with a PAL) in circumstances where there is a reasonable possibility that a project that is not a part of a major modification, and that is not excluded from the definition of physical change or change in the method of operation, may result in a significant emissions increase and the owner or operator elects to use the method specified in subparagraphs (2)(nn)2.(i) through (iii) of this Rule for calculating projected actual emissions.

1. Before beginning actual construction of the project, the owner or operator shall document and maintain a record of the following information:

(i) A description of the project;

(ii) Identification of the emissions unit(s) whose emissions of a regulated NSR pollutant could be affected by the project; and

(iii) A description of the applicability test used to determine that the project is not a major modification for any regulated NSR pollutant, including the baseline actual emissions, the projected actual emissions, the amount of emissions excluded under subparagraph (2)(nn)2.(iii) of this Rule and an explanation for why such amount was excluded, and any netting calculations, if applicable.

2. Before beginning actual construction, the owner or operator shall provide a copy of the information set out in subparagraph (17)(e)1. of this Rule to the Director. Nothing in this subparagraph shall be construed to require the owner or operator of such a unit to obtain any determination from the Director before beginning actual construction; however, nothing in this subparagraph shall be construed to exempt the owner or operator of such a unit from obtaining any minor source Air Permit in accordance with the requirements of this chapter.

3. The owner or operator shall monitor the emissions of any regulated NSR pollutant that could increase as a result of the project and that is emitted by any emissions unit identified in subparagraph (17)(e)1.(ii) of this Rule; and calculate and maintain a record of the annual emissions, in tons per year on a calendar year basis, for a period of 5 years following resumption of regular operations after the change, or for a period of 10 years following resumption of regular operations after the change if the project increases the design capacity or potential to emit of that regulated NSR pollutant at such emissions unit.

4. The owner or operator shall submit a report to the Director within 60 days after the end of each year during which records must be generated under subparagraph (17)(e)3. of this Rule. The report shall contain the following:

(i) All information required by subparagraph (17)(e)1. of this Rule.

(ii) The name, address and telephone number of the major stationary source;

(iii) The annual emissions as calculated pursuant to subparagraph (17)(e)3. of this Rule; and

(iv) Any other information that the owner or operator wishes to include in the report.

5. The owner or operator of the source shall make the information required to be documented and maintained pursuant to subparagraph (17)(e) of this Rule available for review upon a request for inspection by the Department.

6. All information submitted to the Department pursuant to the requirements of subparagraph (17)(e) of this Rule shall be available for review at the request of any member of the public in accordance with the Department's public records review procedures found in ADEM Admin. Code R-335-1-1-.06.

(18) Innovative Control Technology.

(a) An owner or operator of a proposed major stationary source or major modification may request in writing no later than the close of the comment period under paragraph (16) of this Rule that the Director approve a system of innovative control technology.

(b) The Director shall determine that the source or modification may employ a system of innovative control technology, if:

1. The proposed control system would not cause or contribute to an unreasonable risk to public health, welfare or safety in its operation or function;

2. The owner or operator agrees to achieve a level of continuous emissions reduction equivalent to that which would have been required under subparagraph (9)(b) of this Rule by a date specified by the Director. Such date shall not be later than four (4) years from the time of startup or seven (7) years from permit issuance;

3. The source or modification would meet the requirements of paragraph (9) of this Rule based on the emissions rate that the stationary source employing the system of innovative control technology would be required to meet on the date specified by the Director;

4. The source or modification has obtained all emission reductions as required in paragraph (4) prior to initial startup of the source or modification.

5. The consent of the Governor of any other affected state is secured;

6. All other applicable requirements including those for public participation have been met.

(c) The Director shall withdraw any approval to employ a system of innovative control technology made under this Rule, if:

1. The proposed system fails by the specified date to achieve the required continuous emissions reduction rate; or

2. The proposed system fails before the specified date so as to contribute to an unreasonable risk to public health, welfare or safety; or

3. The Director decides at any time that the proposed system is unlikely to achieve the required level of control or to protect the public health, welfare or safety.

(d) If a source or modification fails to meet the required level of continuous emission reduction within the specified time period or the approval is withdrawn in accordance with subparagraph (c) of this paragraph, the Director may allow the

source or modification up to an additional three (3) years to meet the requirement for the application of LAER through use of a demonstrated system of control.

(19) Reserved.

(20) Reserved.

(21) Reserved.

(22) Reserved.

(23) Actuals PALs. The provisions in subparagraphs (23)(a) through (o) of this Rule govern actuals PALs.

(a) Applicability.

1. The Director may approve the use of an actuals PAL for any existing major stationary source if the PAL meets the requirements in subparagraphs (23)(a) through (o) of this Rule. The term "PAL" shall mean "actuals PAL" throughout paragraph (23) of this Rule.

2. Any physical change in or change in the method of operation of a major stationary source that maintains its total source-wide emissions below the PAL level, meets the requirements in subparagraphs (23)(a) through (o) of this Rule, and complies with the PAL permit:

(i) Is not a major modification for the PAL pollutant;

(ii) Does not have to be approved through the nonattainment major NSR program;

3. A major stationary source shall continue to comply with all applicable Federal or State requirements, emission limitations, and work practice requirements that were established prior to the effective date of the PAL.

(b) Definitions. For the purposes of this Rule, the definitions in subparagraphs (23)(b)1. through 11. of this Rule apply. When a term is not defined in these paragraphs, it shall have the meaning given in paragraph (2) of this Rule or in the Clean Air Act.

1. Actuals PAL for a major stationary source means a PAL based on the baseline actual emissions (as defined in subparagraph (2)(uu) of this Rule) of all emissions units (as defined in subparagraph (2)(g) of this Rule) at the source, that emit or have the potential to emit the PAL pollutant.

2. Allowable emissions means "allowable emissions" as defined in subparagraph (2)(p) of this Rule, except as this definition is modified according to subparagraphs (23)(b)2.(i) and (ii) of this Rule.

(i) The allowable emissions for any emissions unit shall be calculated

considering any emission limitations that are enforceable as a practical matter on the emissions unit's potential to emit.

(ii) An emissions unit's potential to emit shall be determined using the definition in subparagraph (2)(d) of this Rule, except that the words "or enforceable as a practical matter" should be added after "enforceable."

3. *Small emissions unit* means an emissions unit that emits or has the potential to emit the PAL pollutant in an amount less than the significant level for that PAL pollutant, as defined in subparagraph (2)(w) of this Rule or in the Clean Air Act, whichever is lower.

4. Major emissions unit means:

(i) Any emissions unit that emits or has the potential to emit 100 tons per year or more of the PAL pollutant in an attainment area.

5. Plantwide applicability limitation (PAL) means an emission limitation expressed in tons per year, for a pollutant at a major stationary source, that is enforceable as a practical matter and established source-wide in accordance with subparagraphs (23)(a) through (o) of this Rule.

6. PAL effective date generally means the date of issuance of the PAL permit. However, the PAL effective date for an increased PAL is the date any emissions unit that is part of the PAL major modification becomes operational and begins to emit the PAL pollutant.

7. PAL effective period means the period beginning with the PAL effective date and ending 10 years later.

8. PAL major modification means, notwithstanding subparagraphs (2)(b) and (2)(c) of this Rule (the definitions for major modification and net emissions increase), any physical change in or change in the method of operation of the PAL source that causes it to emit the PAL pollutant at a level equal to or greater than the PAL.

9. PAL permit means the major NSR permit, the minor NSR permit, or the title V permit issued by the Director that establishes a PAL for a major stationary source.

10. PAL pollutant means the pollutant for which a PAL is established at a major stationary source.

11. Significant emissions unit means an emissions unit that emits or has the potential to emit a PAL pollutant in an amount that is equal to or greater than the significant level (as defined in subparagraph (2)(w) of this Rule or in the Clean Air Act, whichever is lower) for that PAL pollutant, but less than the amount that would qualify the unit as a major emissions unit as defined in subparagraph (23)(b)4. of this Rule.

(c) Permit application requirements. As part of a permit application requesting a PAL, the owner or operator of a major stationary source shall submit the following information to the Director for approval:

1. A list of all emissions units at the source designated as small, significant or major based on their potential to emit. In addition, the owner or operator of the source shall indicate which, if any, Federal or State applicable requirements, emission limitations, or work practices apply to each unit.

2. Calculations of the baseline actual emissions (with supporting documentation). Baseline actual emissions are to include emissions associated not only with operation of the unit, but also emissions associated with startup and shutdown.

3. The calculation procedures that the major stationary source owner or operator proposes to use to convert the monitoring system data to monthly emissions and annual emissions based on a 12-month rolling total for each month as required by subparagraph (23)(m)1. of this Rule.

(d) General requirements for establishing PALs.

1. The Director is allowed to establish a PAL at a major stationary source, provided that at a minimum, the requirements in subparagraphs (23)(d)1.(i) through (vii) of this Rule are met.

(i) The PAL shall impose an annual emission limitation in tons per year, that is enforceable as a practical matter, for the entire major stationary source. For each month during the PAL effective period after the first 12 months of establishing a PAL, the major stationary source owner or operator shall show that the sum of the monthly emissions from each emissions unit under the PAL for the previous 12 consecutive months is less than the PAL (a 12-month total, rolled monthly). For each month during the first 11 months from the PAL effective date, the major stationary source owner or operator shall show that the sum of the preceding monthly emissions from the PAL effective date for each emissions unit under the PAL is less than the PAL.

(ii) The PAL shall be established in a PAL permit that meets the public participation requirements in subparagraph (23)(e) of this Rule.

(iii) The PAL permit shall contain all the requirements of subparagraph (23)(g) of this Rule.

(iv) The PAL shall include fugitive emissions, to the extent quantifiable, from all emissions units that emit or have the potential to emit the PAL pollutant at the major stationary source.

(v) Each PAL shall regulate emissions of only one pollutant.

(vi) Each PAL shall have a PAL effective period of 10 years.

(vii) The owner or operator of the major stationary source with a PAL shall comply with the monitoring, recordkeeping, and reporting requirements provided in subparagraphs (23)(l) through (n) of this Rule for each emissions unit under the PAL through the PAL effective period.

2. At no time (during or after the PAL effective period) are emissions reductions of a PAL pollutant that occur during the PAL effective period creditable as decreases for purposes of offsets under Rule 335-3-14-.05 of this chapter unless the level of the PAL is reduced by the amount of such emissions reductions and such reductions would be creditable in the absence of the PAL.

(e) Public participation requirements for PALs. PALs for existing major stationary sources shall be established, renewed, or increased through a procedure that is consistent with those of this Rule and 40 CFR Parts 51.160 and 51.161. This includes the requirement that the Director provide the public with notice of the proposed approval of a PAL permit and at least a 30-day period for submittal of public comment. The Director must address all material comments before taking final action on the permit.

(f) Setting the 10-year actuals PAL level. The actuals PAL level for a major stationary source shall be established as the sum of the baseline actual emissions (as defined in subparagraph (2)(uu) of this Rule) of the PAL pollutant for each emissions unit at the source; plus an amount equal to the applicable significant level for the PAL pollutant under subparagraph (2)(w) of this Rule or under the Clean Air Act, whichever is lower. When establishing the actuals PAL level, for a PAL pollutant, only one consecutive 24-month period must be used to determine the baseline actual emissions for all existing emissions units. However, a different consecutive 24-month period may be used for each different PAL pollutant. Emissions associated with units that were permanently shutdown after this 24-month period must be subtracted from the PAL level. Emissions from units on which actual construction began after the beginning of the 24-month period must be added to the PAL level in an amount equal to the potential to emit of the unit if the unit began operation less than 24 months prior to the submittal of the PAL application. Baseline actual emissions from units on which actual construction began after the beginning of the 24-month period and commenced operation 24 months or more prior to the submittal of the PAL application must be added to the PAL based upon any 24 month period since the unit commenced operation. The Director shall specify a reduced PAL level(s) (in tons/yr) in the PAL permit to become effective on the future compliance date(s) of any applicable Federal or State regulatory requirement(s) that the Director is aware of prior to issuance of the PAL permit. For instance, if the source owner or operator will be required to reduce emissions from industrial boilers in half from baseline emissions of 60 ppm NOX to a new Rule limit of 30 ppm, then the permit shall contain a future effective PAL level that is equal to the current PAL level reduced by half of the original baseline emissions of such unit(s).

(g) Contents of the PAL permit. The PAL permit must contain, at a minimum, the information in subparagraphs (23)(g)1. through 10. of this Rule.

1. The PAL pollutant and the applicable source-wide emission limitation in

tons per year.

2. The PAL permit effective date and the expiration date of the PAL (PAL effective period).

3. Specification in the PAL permit that if a major stationary source owner or operator applies to renew a PAL in accordance with subparagraph (23)(j) of this Rule before the end of the PAL effective period, then the PAL shall not expire at the end of the PAL effective period. It shall remain in effect until a revised PAL permit is issued by the Director.

4. A requirement that emission calculations for compliance purposes must include emissions from startups and shutdowns.

5. A requirement that, once the PAL expires, the major stationary source is subject to the requirements of subparagraph (23)(i) of this Rule.

6. The calculation procedures that the major stationary source owner or operator shall use to convert the monitoring system data to monthly emissions and annual emissions based on a 12-month rolling total as required by subparagraph (23)(m)1. of this Rule.

7. A requirement that the major stationary source owner or operator monitor all emissions units in accordance with the provisions under subparagraph (23)(l) of this Rule.

8. A requirement to retain the records required under subparagraph (23)(m) of this Rule on site. Such records may be retained in an electronic format.

9. A requirement to submit the reports required under subparagraph (23)(n) of this Rule by the required deadlines.

10. Any other requirements that the Director deems necessary to implement and enforce the PAL.

(h) <u>PAL effective period and reopening of the PAL permit</u>. The requirements in subparagraphs (23)(h)1. and 2. of this Rule apply to actuals PALs.

1. <u>PAL effective period</u>. The Director shall specify a PAL effective period of 10 years.

2. <u>Reopening of the PAL permit</u>.

(i) During the PAL effective period, the Director must reopen the PAL permit to:

(I) Correct typographical/calculation errors made in setting the PAL or reflect a more accurate determination of emissions used to establish the PAL;

(II) Reduce the PAL if the owner or operator of the major stationary source creates creditable emissions reductions for use as offsets under Rule 335-3-14-.05; and

(III) Revise the PAL to reflect an increase in the PAL as provided under subparagraph (23)(k) of this Rule.

(ii) The Director shall have discretion to reopen the PAL permit for the following:

(I) Reduce the PAL to reflect newly applicable Federal requirements (for example, NSPS) with compliance dates after the PAL effective date;

(II) Reduce the PAL consistent with any other requirement, that is enforceable as a practical matter, and is required by these regulations; and

(III) Reduce the PAL if the Director determines that a reduction is necessary to avoid causing or contributing to a NAAQS or PSD increment violation, or to an adverse impact on a published air quality related value that has been identified for a Federal Class I area by a Federal Land Manager and for which information is available to the general public.

(iii) Except for the permit reopening in subparagraph (23)(h)2.(i)(I) of this Rule for the correction of typographical/calculation errors that do not increase the PAL level, all other reopenings shall be carried out in accordance with the public participation requirements of subparagraph (23)(e) of this Rule.

(i) Expiration of a PAL. Any PAL that is not renewed in accordance with the procedures in subparagraph (23)(j) of this Rule shall expire at the end of the PAL effective period, and the requirements in subparagraphs (23)(i)1. through 5. of this Rule shall apply.

1. Each emissions unit (or each group of emissions units) that existed under the PAL shall comply with an allowable emission limitation under a revised permit established according to the procedures in subparagraphs (23)(i)1.(i) and (ii) of this Rule.

(i) Within the time frame specified for PAL renewals in subparagraph (23)(j)2. of this Rule, the major stationary source shall submit a proposed allowable emission limitation for each emissions unit (or each group of emissions units, if such a distribution is more appropriate as decided by the Director) by distributing the PAL allowable emissions for the major stationary source among each of the emissions units that existed under the PAL. If the PAL had not yet been adjusted for an applicable requirement that became effective during the PAL effective period, as required under subparagraph (23)(j)5. of this Rule, such distribution shall be made as if the PAL had been adjusted.

(ii) The Director shall decide whether and how the PAL allowable emissions will be distributed and issue a revised permit incorporating allowable limits for each emissions unit, or each group of emissions units, as the Director determines is appropriate.

2. Each emissions unit(s) shall comply with the allowable emission limitation on a 12-month rolling basis. The Director may approve the use of

monitoring systems (source testing, emission factors, etc.) other than CEMS, CERMS, PEMS, or CPMS to demonstrate compliance with the allowable emission limitation.

3. Until the Director issues the revised permit incorporating allowable limits for each emissions unit, or each group of emissions units, as required under subparagraph (23)(i)1.(ii) of this Rule, the source shall continue to comply with a source-wide, multi-unit emissions cap equivalent to the level of the PAL emission limitation.

4. Any physical change or change in the method of operation at the major stationary source will be subject to major NSR requirements if such change meets the definition of major modification in subparagraph (2)(b) of this Rule.

5. The major stationary source owner or operator shall continue to comply with any State or Federal applicable requirements (BACT, RACT, NSPS, synthetic minor limit, etc.) that may have applied either during the PAL effective period or prior to the PAL effective period.

(j) Renewal of a PAL.

1. The Director shall follow the procedures specified in subparagraph (23)(e) of this Rule in approving any request to renew a PAL for a major stationary source, and shall provide both the proposed PAL level and a written rationale for the proposed PAL level to the public for review and comment. During such public review, any person may propose a PAL level for the source for consideration by the Director.

2. Application deadline. A major stationary source owner or operator shall submit a timely application to the Director to request renewal of a PAL. A timely application is one that is submitted at least 6 months prior to, but not earlier than 18 months from, the date of permit expiration. This deadline for application submittal is to ensure that the permit will not expire before the permit is renewed. If the owner or operator of a major stationary source submits a complete application to renew the PAL within this time period, then the PAL shall continue to be effective until the revised permit with the renewed PAL is issued.

3. Application requirements. The application to renew a PAL permit shall contain the information required in subparagraphs (23)(j)3.(i) through (iv) of this Rule.

(i) The information required in subparagraphs (23)(c)1. through 3. of this Rule.

(ii) A proposed PAL level.

(iii) The sum of the potential to emit of all emissions units under the PAL (with supporting documentation).

(iv) Any other information the owner or operator wishes the Director to consider in determining the appropriate level for renewing the PAL.

4. PAL adjustment. In determining whether and how to adjust the PAL, the Director shall consider the options outlined in subparagraphs (23)(j)4.(i) and (ii) of this Rule. However, in no case may any such adjustment fail to comply with subparagraph (23)(j)4.(iii) of this Rule.

(i) If the emissions level calculated in accordance with subparagraph (23)(f) of this Rule is equal to or greater than 80 percent of the PAL level, the Director may renew the PAL at the same level without considering the factors set forth in subparagraph (23)(j)4.(ii) of this Rule; or

(ii) The Director may set the PAL at a level that he or she determines to be more representative of the source's baseline actual emissions, or that he or she determines to be more appropriate considering air quality needs, advances in control technology, anticipated economic growth in the area, desire to reward or encourage the source's voluntary emissions reductions, or other factors as specifically identified by the Director in his or her written rationale.

(iii) Notwithstanding subparagraphs (23)(j)4.(i) and (ii) of this Rule:

(I) If the potential to emit of the major stationary source is less than the PAL, the Director shall adjust the PAL to a level no greater than the potential to emit of the source; and

(II) The Director shall not approve a renewed PAL level higher than the current PAL, unless the major stationary source has complied with the provisions of subparagraph (23)(k) of this Rule (increasing a PAL).

5. If the compliance date for a State or Federal requirement that applies to the PAL source occurs during the PAL effective period, and if the Director has not already adjusted for such requirement, the PAL shall be adjusted at the time of PAL permit renewal or title V permit renewal, whichever occurs first.

(k) Increasing a PAL during the PAL effective period.

1. The Director may increase a PAL emission limitation only if the major stationary source complies with the provisions in subparagraphs (23)(k)1.(i) through(iv) of this Rule.

(i) The owner or operator of the major stationary source shall submit a complete application to request an increase in the PAL limit for a PAL major modification. Such application shall identify the emissions unit(s) contributing to the increase in emissions so as to cause the major stationary source's emissions to equal or exceed its PAL.

(ii) As part of this application, the major stationary source owner or operator shall demonstrate that the sum of the baseline actual emissions of the small emissions units, plus the sum of the baseline actual emissions of the significant and major emissions units assuming application of BACT equivalent controls, plus the sum of the allowable emissions of the new or modified emissions unit(s) exceeds the PAL. The level of control that would result from

BACT equivalent controls on each significant or major emissions unit shall be determined by conducting a new BACT analysis at the time the application is submitted, unless the emissions unit is currently required to comply with a BACT or LAER requirement that was established within the preceding 10 years. In such a case, the assumed control level for that emissions unit shall be equal to the level of BACT or LAER with which that emissions unit must currently comply.

(iii) The owner or operator obtains a major NSR permit for all emissions unit(s) identified in subparagraph (23)(k)1.(i) of this Rule, regardless of the magnitude of the emissions increase resulting from them (that is, no significant levels apply). These emissions unit(s) shall comply with any emissions requirements resulting from the major NSR process (for example, BACT), even though they have also become subject to the PAL or continue to be subject to the PAL.

(iv) The PAL permit shall require that the increased PAL level shall be effective on the day any emissions unit that is part of the PAL major modification becomes operational and begins to emit the PAL pollutant.

2. The Director shall calculate the new PAL as the sum of the allowable emissions for each modified or new emissions unit, plus the sum of the baseline actual emissions of the significant and major emissions units (assuming application of BACT equivalent controls as determined in accordance with subparagraph (23)(k)1.(ii)), plus the sum of the baseline actual emissions of the small emissions units.

3. The PAL permit shall be revised to reflect the increased PAL level pursuant to the public notice requirements of subparagraph (23)(e) of this Rule.

(l) Monitoring requirements for PALs.

1. General requirements.

(i) Each PAL permit must contain enforceable requirements for the monitoring system that accurately determines plantwide emissions of the PAL pollutant in terms of mass per unit of time. Any monitoring system authorized for use in the PAL permit must be based on sound science and meet generally acceptable scientific procedures for data quality and manipulation. Additionally, the information generated by such system must meet minimum legal requirements for admissibility in a judicial proceeding to enforce the PAL permit.

(ii) The PAL monitoring system must employ one or more of the four general monitoring approaches meeting the minimum requirements set forth in subparagraphs (23)(l)2.(i) through (iv) of this Rule and must be approved by the Director.

(iii) Notwithstanding subparagraph (23)(l)1.(ii) of this Rule, an alternative monitoring approach that meets subparagraph (23)(l)1.(i) of this Rule may be employed if approved by the Director.

(iv) Failure to use a monitoring system that meets the requirements of this Rule renders the PAL invalid.

2. Minimum performance requirements for approved monitoring approaches. The following are acceptable general monitoring approaches when conducted in accordance with the minimum requirements in subparagraphs (23)(l)3. through 9. of this Rule:

(i) Mass balance calculations for activities using coatings or solvents;

(ii) CEMS;

(iii) CPMS or PEMS; and

(iv) Emission factors.

3. Mass balance calculations. An owner or operator using mass balance calculations to monitor PAL pollutant emissions from activities using coating or solvents shall meet the following requirements:

(i) Provide a demonstrated means of validating the published content of the PAL pollutant that is contained in or created by all materials used in or at the emissions unit;

(ii) Assume that the emissions unit emits all of the PAL pollutant that is contained in or created by any raw material or fuel used in or at the emissions unit, if it cannot otherwise be accounted for in the process; and

(iii) Where the vendor of a material or fuel, which is used in or at the emissions unit, publishes a range of pollutant content from such material, the owner or operator must use the highest value of the range to calculate the PAL pollutant emissions unless the Director determines there is site-specific data or a site-specific monitoring program to support another content within the range.

4. CEMS. An owner or operator using CEMS to monitor PAL pollutant emissions shall meet the following requirements:

(i) CEMS must comply with applicable Performance Specifications found in 40 CFR part 60, appendix B; and

(ii) CEMS must sample, analyze and record data at least every 15 minutes while the emissions unit is operating.

5. CPMS or PEMS. An owner or operator using CPMS or PEMS to monitor PAL pollutant emissions shall meet the following requirements:

(i) The CPMS or the PEMS must be based on current site-specific data demonstrating a correlation between the monitored parameter(s) and the PAL pollutant emissions across the range of operation of the emissions unit; and

(ii) Each CPMS or PEMS must sample, analyze, and record data at least

every 15 minutes, or at another less frequent interval approved by the Director, while the emissions unit is operating.

6. Emission factors. An owner or operator using emission factors to monitor PAL pollutant emissions shall meet the following requirements:

(i) All emission factors shall be adjusted, if appropriate, to account for the degree of uncertainty or limitations in the factors' development;

(ii) The emissions unit shall operate within the designated range of use for the emission factor, if applicable; and

(iii) If technically practicable, the owner or operator of a significant emissions unit that relies on an emission factor to calculate PAL pollutant emissions shall conduct validation testing to determine a site-specific emission factor within 6 months of PAL permit issuance, unless the Director determines that testing is not required.

7. A source owner or operator must record and report maximum potential emissions without considering enforceable emission limitations or operational restrictions for an emissions unit during any period of time that there is no monitoring data, unless another method for determining emissions during such periods is specified in the PAL permit.

8. Notwithstanding the requirements in subparagraphs (23)(l)3. through 7. of this Rule, where an owner or operator of an emissions unit cannot demonstrate a correlation between the monitored parameter(s) and the PAL pollutant emissions rate at all operating points of the emissions unit, the Director shall, at the time of permit issuance:

(i) Establish default value(s) for determining compliance with the PAL based on the highest potential emissions reasonably estimated at such operating point(s); or

(ii) Determine that operation of the emissions unit during operating conditions when there is no correlation between monitored parameter(s) and the PAL pollutant emissions is a violation of the PAL.

9. Re-validation. All data used to establish the PAL pollutant must be re-validated through performance testing or other scientifically valid means approved by the Director. Such testing must occur at least once every 5 years after issuance of the PAL.

(m) Recordkeeping requirements.

1.The PAL permit shall require an owner or operator to retain a copy of all records necessary to determine compliance with any requirement of paragraph (23) of this Rule and of the PAL, including a determination of each emissions unit's 12-month rolling total emissions, for 5 years from the date of such record.

2. The PAL permit shall require an owner or operator to retain a copy of the following records for the duration of the PAL effective period plus 5 years:

(i) A copy of the PAL permit application and any applications for revisions to the PAL; and

(ii) Each annual certification of compliance pursuant to title V and the data relied on in certifying the compliance.

(n) Reporting and notification requirements. The owner or operator shall submit semi-annual monitoring reports and prompt deviation reports to the Director in accordance with the applicable title V operating permit. The reports shall meet the requirements in subparagraphs (23)(n)1. through 3. of this Rule.

1. Semi-annual report. This report shall contain the information required in subparagraphs (23)(n)1.(i) through (vii) of this Rule.

(i) The identification of owner and operator and the permit number.

(ii) Total annual emissions (tons/year) based on a 12-month rolling total for each month in the reporting period recorded pursuant to subparagraph (23)(m)1. of this Rule.

(iii) All data relied upon, including, but not limited to, any Quality Assurance or Quality Control data, in calculating the monthly and annual PAL pollutant emissions.

(iv) A list of any emissions units modified or added to the major stationary source during the preceding 6-month period.

(v) The number, duration, and cause of any deviations or monitoring malfunctions (other than the time associated with zero and span calibration checks), and any corrective action taken.

(vi) A notification of a shutdown of any monitoring system, whether the shutdown was permanent or temporary, the reason for the shutdown, the anticipated date that the monitoring system will be fully operational or replaced with another monitoring system, and whether the emissions unit monitored by the monitoring system continued to operate, and the calculation of the emissions of the pollutant or the number determined by method included in the permit, as provided by subparagraph (23)(l)7. of this rule.

(vii) A signed statement by a responsible official (as defined in Chapter 335-3-16 of these Regulations) certifying the truth, accuracy, and completeness of the information provided in the report.

2. Deviation report. The major stationary source owner or operator shall promptly submit reports of any deviations or exceedance of the PAL requirements, including periods where no monitoring is available. A report submitted pursuant to 335-3-16-.05(c)3.(ii) shall satisfy this reporting

requirement. The reports shall contain the following information:

(i) The identification of owner and operator and the permit number;

(ii) The PAL requirement that experienced the deviation or that was exceeded;

(iii) Emissions resulting from the deviation or the exceedance; and

(iv) A signed statement by a responsible official (as defined in Chapter 335- 3-16 of these Regulations) certifying the truth, accuracy, and completeness of the information provided in the report.

3. Re-validation results. The owner or operator shall submit to the Director the results of any re-validation test or method within 3 months after completion of such test or method.

(o) Transition requirements.

1. The Director may not issue a PAL that does not comply with the requirements in subparagraphs (23)(a) through(o) of this Rule after the effective date of this Rule.

2. The Director may supersede any PAL that was established prior to the effective date of this Rule with a PAL that complies with the requirements of subparagraphs (23)(a) through (o) of this Rule.

(24) If any provision of this Rule, or the application of such provision to any person or circumstance, is held invalid, the remainder of this Rule, or the application of such provision to persons or circumstances other than those as to which it is held invalid, shall not be affected thereby.

Author: James W. Cooper; John E. Daniel; and Larry W. Brown.
Statutory Authority: Code of Alabama 1975, §§22-28-14, 22-22A-5, 22-22A-6, and 22-22A-8.
History: Effective Date: January 18, 1972.
Amended: April 3, 1979; February 13, 1980; March 24, 1981; March 23, 1982; February 13, 1985; November 13, 1985; September 18, 1986; June 9, 1987; May 4, 1988; September 21, 1989; November 1, 1990; October 30, 1992, December 28, 1993, April 27, 1995; November 21, 1996; March 27, 1998; January 13, 2000; September 7, 2000; May 23, 2011; June 2, 2017.

335-3-14-.06 Requirements for Control Technology [Determinations for Major Sources in Accordance with Clean Air Act Section 112(g)].

(1) Applicability.

(a) The requirements of paragraphs (1) through (4) of this rule carry out Section 112(g)(2)(B) of the 1990 Clean Air Act Amendments (hereinafter, referred to as 'the Act' in this rule).

(b) Overall requirements. The requirements of paragraphs (1) through (4) of this rule apply to any owner or operator who constructs or reconstructs a major source of hazardous air pollutants after the effective date of this rule unless the major source in question has been specifically regulated or exempted from regulation under a standard issued pursuant to Section 112(d), Section 112(h), or Section 112(j) and incorporated in another Subpart of Part 63 of the 40 Code of Federal Regulations or chapter 335-3-11 of this Division, or the owner or operator of such major source has received all necessary air quality permits for such construction or reconstruction project before the effective date of this rule.

(c) Exclusion for electric utility steam generating units. The requirements of this rule do not apply to electric utility steam generating units unless and until such time as these units are added to the source category list pursuant to Section 112(c)(5) of the Act.

(d) Exclusion for stationary sources in deleted source categories. The requirements of this rule do not apply to stationary sources that are within a source category that has been deleted from the source category list pursuant to Section 112(c)(9) of the Act.

(e) Exclusion for research and development activities. The requirements of this rule do not apply to research and development activities, as defined in paragraph (2) below.

(f) Prohibition. After the effective date of this rule, no person may begin actual construction or reconstruction of a major source of HAP unless:

1. The major source in question has been specifically regulated or exempted from regulation under a standard issued pursuant to Section 112(d), Section 112(h) or Section 112(j) in Part 63 [40 CFR 63, Subpart B, as incorporated by reference in rule 335-3-11-.06(1)], and the owner and operator has fully complied with all procedures and requirements for preconstruction review established by that standard, including any applicable requirements set forth in Subpart A of Part 63; or

2. The Department has made a final and effective case-by-case determination pursuant to the provisions of this rule such that emissions from the constructed or reconstructed major source will be controlled to a level no less stringent than the maximum achievable control technology emission limitation for new sources.

(2) Definitions.

Terms used in this rule that are not defined below have the meaning given to them in the Act and in 40 CFR Subpart A.

(a) "Affected Source" means the stationary source or group of stationary sources which, when fabricated (on site), erected, or installed meets the definition of "construct a major source" or the definition of "reconstruct a major source" contained in this paragraph.

(b) "Affected States" are all States:

1. Whose air quality may be affected and that are contiguous to the State in which a MACT determination is made in accordance with this rule; or

2. Whose air quality may be affected and that are within 50 miles of the major source for which a MACT determination is made in accordance with this rule.

(c) "Available Information" means, for purposes of identifying control technology options for the affected source, information contained in the following information sources as of the date of approval of the MACT determination by the Department:

1. A relevant proposed regulation, including all supporting information;

2. Background information documents for a draft or proposed regulation;

3. Data and information available from the Control Technology Center developed pursuant to Section 113 of the Act;

4. Data and information contained in the Aerometric Informational Retrieval System including information in the MACT data base;

5. Any additional information that can be expeditiously provided by the Director; and

6. For the purpose of determinations by the Department, any additional information provided by the applicant or others, and any additional information considered available by the Department.

(d) "Construct a Major Source" means:

1. To fabricate, erect, or install at any greenfield site a stationary source or group of stationary sources which is located within a contiguous area and under common control and which emits or has the potential to emit 10 tons per year of any HAP or 25 tons per year of any combination of HAPs, or

2. To fabricate, erect, or install at any developed site a new process or production unit which in and of itself emits or has the potential to emit 10 tons per year of any HAP or 25 tons per year of any combination of HAPs, unless the process or production unit satisfies criteria (i) through (vi) below:

(i) All HAP emitted by the process or production unit that would otherwise be controlled under the requirements of this rule will be controlled by emission control equipment which was previously installed at the same site as the process or production unit;

(ii) The Department has determined within a period of 5 years prior to the fabrication, erection, or installation of the process or production unit that the existing emission control equipment represented best available control technology

(BACT), or lowest achievable emission rate (LAER) under chapter 335- 3-14; or the Department determines that the control of HAP emissions provided by the existing equipment will be equivalent to that level of control currently achieved by other well-controlled similar sources (i.e., equivalent to the level of control that would be provided by a current BACT or LAER determination);

(iii) The Department determines that the percent control efficiency for emissions of HAP from all sources to be controlled by the existing control equipment will be equivalent to the percent control efficiency provided by the control equipment prior to the inclusion of the new process or production unit;

(iv) The Department has provided notice and an opportunity for public comment concerning its determination that criteria in subparagraphs 2.(i), 2.(ii), and 2.(iii) of this definition apply and concerning the continued adequacy of any prior LAER or BACT determination;

(v) If any commenter has asserted that a prior LAER or BACT determination is no longer adequate, the Department has determined that the level of control required by that prior determination remains adequate; and

(vi) Any emission limitations, work practice requirements, or other terms and conditions upon which the above determinations by the Department are predicated will be construed by the Department as applicable requirements under Section 504(a) and either have been incorporated into any existing Major Source Operating Permit for the affected facility or will be incorporated into such permit upon issuance.

(e) "Control Technology" means measures, processes, methods, systems, or techniques to limit the emission of hazardous air pollutants through process changes, substitution of materials or other modifications including, but not limited to, measures that:

1. Reduce the quantity of, or eliminate emissions of, such pollutants through process changes, substitution of materials or other modifications;

2. Enclose systems or processes to eliminate emissions;

3. Collect, capture or treat such pollutants when released from a process, stack, storage or fugitive emissions point;

4. Are design, equipment, work practice, or operational standards (including requirements for operator training or certification) as provided in 42 U.S.C. 7412(h); or

5. Are a combination of subparagraphs 1. - 4. of this definition.

(f) "Department" means the Department as defined in this Division.

(g) "Effective Date of Section 112(g)(2)(B)" means the effective date of this rule adopted by the Department.

(h) "Electric Utility Steam Generating Unit" means any fossil fuel fired combustion unit of more than 25 megawatts that serves a generator that produces electricity for sale. A unit that co-generates steam and electricity and supplies more than one-third of its potential electric output capacity and more than 25 megawatts electric output to any utility power distribution system for sale shall be considered an electric utility steam generating unit.

(i) "Greenfield Site" means a contiguous area under common control that is an undeveloped site.

(j) "Hazardous Air Pollutant or HAP" means any of the substances listed in Appendix G of this Division.

(k) "List of Source Categories" means the Source Category List required by Section 112(c) of the Act.

(l) "Maximum Achievable Control Technology (MACT) Emission Limitation for New Sources" means the emission limitation which is not less stringent than the emission limitation achieved in practice by the best controlled similar source, and which reflects the maximum degree of reduction in emissions that the Department, taking into consideration the cost of achieving such emission reduction, and any non-air quality health and environmental impacts and energy requirements, determines is achievable by the constructed or reconstructed major source.

(m) "Process or Production Unit" means any collection of structures and/or equipment, that processes, assembles, applies, or otherwise uses material inputs to produce or store an intermediate or final product. A single facility may contain more than one process or production unit.

(n) "Reconstruct a Major Source" means the replacement of components at an existing process or production unit that in and of itself emits or has the potential to emit 10 tons per year of any HAP or 25 tons per year of any combination of HAPs, whenever:

1. The fixed capital cost of the new components exceeds 50 percent of the fixed capital cost that would be required to construct a comparable process or production unit; and

2. It is technically and economically feasible for the reconstructed major source to meet the applicable maximum achievable control technology emission limitation for new sources established under this rule.

(o) "Research and Development Activities" means activities conducted at a research or laboratory facility whose primary purpose is to conduct research and development into new processes and products, where such source is operated under the close supervision of technically trained personnel and is not engaged in the manufacture of products for sale or exchange for commercial profit, except in a de minimis manner.

(p) "Similar Source" means a stationary source or process that has comparable emissions and is structurally similar in design and capacity to a constructed or reconstructed major source such that the source could be controlled using the same control technology.

(3) Maximum Achievable Control Technology (MACT) Determinations for Constructed and Reconstructed Major Sources.

(a) Applicability. The requirements of this paragraph apply to an owner or operator who constructs or reconstructs a major source of HAP subject to a case-by-case determination of maximum achievable control technology pursuant to this rule.

(b) Principles of MACT determinations. The following general principles shall govern preparation by the owner or operator of each permit application or other application requiring a case-by-case MACT determination concerning construction or reconstruction of a major source, and all subsequent review of and actions taken concerning such an application by the Department:

1. The MACT emission limitation or MACT requirements recommended by the applicant and approved by the Department shall not be less stringent than the emission control which is achieved in practice by the best controlled similar source, as determined by the Department.

2. Based upon available information, as defined in this rule, the MACT emission limitation and control technology (including any requirements under subparagraph (b)3. below) recommended by the applicant and approved by the Department shall achieve the maximum degree of reduction in emissions of HAP which can be achieved by utilizing those control technologies that can be identified from the available information, taking into consideration the costs of achieving such emission reduction and any non-air quality health and environmental impacts and energy requirements associated with the emission reduction.

3. The applicant may recommend a specific design, equipment, work practice, or operational standard, or a combination thereof, and the Department may approve such a standard if the Department specifically determines that it is not feasible to prescribe or enforce an emission limitation under the criteria set forth in Section 112(h)(2) of the Act.

4. If the Administrator has either proposed a relevant emission standard pursuant to Section 112(d) or Section 112(h) of the Act or adopted a presumptive MACT determination for the source category which includes the constructed or reconstructed major source, then the MACT requirements applied to the constructed or reconstructed major source shall have considered those MACT emission limitations and requirements of the proposed standard or presumptive MACT determination.

(c) Application requirements for a case-by-case MACT determination.

1. An application for a MACT determination (whether a permit application under chapter 335-3-16, or other permit specified by the Department under subparagraph (d) of this paragraph) shall specify a control technology selected by the owner or operator that, if properly operated and maintained, will meet the MACT emission limitation or standard as determined according to the principles set forth in subparagraph (b) of this paragraph.

2. In each instance where a constructed or reconstructed major source would require additional control technology or a change in control technology, the application for a MACT determination shall contain the following information:

(i) The name and address (physical location) of the major source to be constructed or reconstructed;

(ii) A brief description of the major source to be constructed or reconstructed and identification of any listed source category or categories in which it is included;

(iii) The expected commencement date for the construction or reconstruction of the major source;

(iv) The expected completion date for construction or reconstruction of the major source;

(v) the anticipated date of start-up for the constructed or reconstructed major source;

(vi) The HAP emitted by the constructed or reconstructed major source, and the estimated emission rate for each such HAP, to the extent this information is needed by the Department to determine MACT;

(vii) Any enforceable emission limitations applicable to the constructed or reconstructed major source;

(viii) The maximum and expected utilization of capacity of the constructed or reconstructed major source, and the associated uncontrolled emission rates for that source, to the extent this information is needed by the Department to determine MACT;

(ix) The controlled emissions for the constructed or reconstructed major source in tons/yr at expected and maximum utilization of capacity, to the extent this information is needed by the Department to determine MACT;

(x) A recommended emission limitation for the constructed or reconstructed major source consistent with the principles set forth in subparagraph (b) of this paragraph;

(xi) The selected control technology to meet the recommended MACT emission limitation, including technical information on the design, operation, size, estimated control efficiency of the control technology (and the manufacturer's

name, address, telephone number, and relevant specifications and drawings, if requested by the Department);

(xii) Supporting documentation including identification of alternative control technologies considered by the applicant to meet the emission limitation, and analysis of cost and non-air quality health environmental impacts or energy requirements for the selected control technology; and

(xiii) Any other relevant information required pursuant to Subpart A, 40 CFR 63.

3. In each instance where the owner or operator contends that a constructed or reconstructed major source will be in compliance, upon startup, with case-by-case MACT under this rule without a change in control technology, the application for a MACT determination shall contain the following information:

(i) The information described in subparagraphs (c)2.(i) through (c)2.(x) of this paragraph; and

(ii) Documentation of the control technology in place.

(d) Permit Content.

1. The Air Permit will contain a MACT emission limitation (or a MACT work practice standard if the Department determines it is not feasible to prescribe or enforce an emission standard) to control the emissions of HAP. The MACT emission limitation or standard will be determined by the Department and will conform to the principles set forth in subparagraph (3)(b) of this rule.

2. The Air Permit will specify any notification, operation and maintenance, performance testing, monitoring, reporting and record keeping requirements, including:

(i) Additional emission limits, production limits, operational limits or other terms and conditions necessary to ensure enforceability of the MACT emission limitation;

(ii) Compliance certifications, testing, monitoring, reporting and record keeping requirements that are consistent with the requirements of 335-3-16-.07;

(iii) In accordance with Section 114(a)(3) of the Act, monitoring shall be capable of demonstrating continuous compliance during the applicable reporting period. Such monitoring data shall be of sufficient quality to be used as a basis for enforcing all applicable requirements established under this rule, including emission limitations;

(iv) A statement requiring the owner or operator to comply with all applicable requirements contained in Subpart A of 40 CFR 63;

3. All provisions contained in the Air Permit shall be enforceable upon the

effective date of issuance of said permit, as provided by subparagraph (g) of this paragraph.

4. The Air Permit shall expire if construction or reconstruction has not commenced within 18 months of issuance, unless the Department has granted an extension which shall not exceed an additional 12 months.

(e) Public participation.

1. Notice shall be posted on the Department's web site for the duration of the comment period, and also transmitted to a list developed by the Department for persons desiring notice of permit action, including persons who have requested in writing to be on such a list;

2. The notice shall include a link to the proposed permit and information on how to access the administrative record for the proposed permit; identify the affected facility; the name and address of the permittee; the address of the Department; the activity or activities involved in the permit action; the emissions change involved in any permit modification; the name, address, and telephone number of a person (or an email or web site address) from whom interested persons may obtain additional information, including the application, all relevant supporting materials, including any compliance plan, monitoring and compliance certification report, except for information entitled to be kept confidential, and all other materials available to the Department that are relevant to the permit decision; a brief description of the comment procedures required by this chapter; and the time and place of any hearing that may be held, including a statement of procedures to request a hearing (unless a hearing has already been scheduled);

3. The Department shall provide at least 30 days for public comment and shall give notice of any public hearing at least 30 days in advance of the hearing; and

4. The Department shall keep a record of the comments made during the public participation process.

5. Exceptions.

(i) If the owner or operator obtains a Major Source Operating Permit prior to construction or reconstruction of a source subject to this rule, then the requirements of this subparagraph do not apply.

(ii) If the owner or operator is concurrently applying for an Air Permit under rules 335-3-14-.04 or 335-3-14-.05, the public participation requirements of those rules shall substitute for the requirements of this paragraph.

(f) Prohibition of construction. An owner or operator applying for a MACT emission limitation for new sources under this rule shall not begin construction until a permit has been issued pursuant to this rule.

(g) Effective date. The effective date of a MACT determination shall be the

date of issuance of a final Major Source Operating Permit incorporating a MACT determination (in those instances where the owner or operator either is required or elects to obtain such a permit before construction or reconstruction), or a permit issued pursuant to this rule.

(h) Compliance date. On and after the date of start-up, a constructed or reconstructed major source which is subject to the requirements of this rule shall be in compliance with all applicable requirements specified in the MACT determination.

(i) Compliance with MACT determinations.

1. An owner or operator of a constructed or reconstructed major source that is subject to a MACT determination shall comply with all requirements in the final Major Source Operating Permit (in those instances where the owner or operator either is required or elects to obtain such a permit before construction or reconstruction), or other permit issued pursuant to this rule, including but not limited to any MACT emission limitation or MACT work practice standard, and any notification, operation and maintenance, performance testing, monitoring, reporting, and recordkeeping requirements.

2. An owner or operator of a constructed or reconstructed major source which has obtained a MACT determination shall be deemed to be in compliance with Section 112(g)(2)(B) of the Act and this rule only to the extent that the constructed or reconstructed major source is in compliance with all requirements set forth in the final Major Source Operating Permit (in those instances where the owner or operator either is required or elects to obtain such a permit before construction or reconstruction), or other permit issued pursuant to this rule. Any violation of such requirements by the owner or operator shall be deemed by the Department and by EPA to be a violation of the prohibition on construction or reconstruction in Section 112(g)(2)(B) and this rule for whatever period the owner or operator is determined to be in violation of such requirements, and shall subject the owner or operator to appropriate enforcement action under the Act.

(4) Requirements for Constructed or Reconstructed Major Sources Subject to a Subsequently Promulgated MACT Standard or MACT Requirement.

(a) If the Administrator promulgates an emission standard under Section 112(d) or Section 112(h) of the Act or the Department issues a determination under Section 112(j) of the Act [40 CFR 63, Subpart B, as incorporated by reference in rule 335-3-11-.06(1)] that is applicable to a stationary source or group of sources which would be deemed to be a constructed or reconstructed major source under this rule before the date that the owner or operator has obtained a final and legally effective MACT determination pursuant to this rule, the owner or operator of the source(s) shall comply with the promulgated standard or determination rather than any MACT determination under this rule, and the owner or operator shall comply with the promulgated standard by the compliance date in the promulgated standard.

(b) If the Administrator promulgates an emission standard under Section

112(d) or Section 112(h) of the Act or the Department makes a determination under Section 112(j) of the Act [40 CFR 63, Subpart B, as incorporated by reference in rule 335-3-11-.06(1)] that is applicable to a stationary source or group of sources which was deemed to be a constructed or reconstructed major source under this rule and has been subject to a prior case-by-case MACT determination pursuant to this rule, and the owner and operator obtained a final and legally effective case-by-case MACT determination prior to the promulgation date of such emission standard, then the Department shall (if the initial Major Source Operating Permit has not yet been issued) issue an initial operating permit which incorporates the emission standard or determination, or shall (if the initial Major Source Operating Permit has been issued) revise the operating permit according to the reopening procedures in chapter 335-3-16 to incorporate the emission standard or determination.

1. The EPA may include in the emission standard established under Section 112(d) or Section 112(h) of the Act a specific compliance date for those sources which have obtained a final and legally effective MACT determination under this rule and which have submitted the information required by paragraph (3) of this rule to the EPA before the close of the public comment period for the standard established under Section 112(d) of the Act. Such date shall assure that the owner or operator shall comply with the promulgated standard as expeditiously as practicable, but not longer than 8 years after such standard is promulgated. In that event, the Department shall incorporate the applicable compliance date in the Major Source Operating Permit.

2. If no compliance date has been established in the promulgated Section 112(d) or 112(h) standard or Section 112(j) determination [40 CFR 63, Subpart B, as incorporated by reference in rule 335-3-11-.06(1)], for those sources which have obtained a final and legally effective MACT determination under this rule, then the Department shall establish a compliance date in the permit that assures that the owner or operator shall comply with the promulgated standard or determination as expeditiously as practicable, but not longer than 8 years after such standard is promulgated or a Section 112(j) determination [40 CFR 63, Subpart B, as incorporated by reference in rule 335-3-11-.06(1)] is made.

(c) Notwithstanding the requirements of subparagraphs (a) and (b) of this paragraph, if the Administrator promulgates an emission standard under Section 112(d) or Section 112(h) of the Act or the Department issues a determination under Section 112(j) of the Act [40 CFR 63, Subpart B, as incorporated by reference in rule 335-3-11-.06(1)] that is applicable to a stationary source or group of sources which was deemed to be a constructed or reconstructed major source under this rule and which is the subject of a prior case-by-case MACT determination pursuant to paragraph (3) of this rule, and the level of control required by the emission standard issued under Section 112(d) or Section 112(h) or the determination issued under Section 112(j) [40 CFR 63, Subpart B, as incorporated by reference in rule 335-3-11-.06(1)] is less stringent than the level of control required by any emission limitation or standard in the prior MACT determination, the Department is not required to incorporate any less stringent terms of the promulgated standard in the Major Source Operating Permit applicable to such source(s) and may in its discretion consider any more stringent

provisions of the prior MACT determination to be applicable legal requirements when issuing or revising such an operating permit.

Author: Ronald W. Gore.
Statutory Authority: Code of Alabama 1975, §§22-28-11, 22-28-14, 22-28-16, 22-22A-5.
History: Effective Date: March 27, 1998.
Amended: September 7, 2000; June 2, 2017.

ALABAMA DEPARTMENT OF ENVIRONMENTAL MANAGEMENT
AIR DIVISION – AIR POLLUTION CONTROL PROGRAM

CHAPTER 335-3-15
SYNTHETIC MINOR OPERATING PERMITS

TABLE OF CONTENTS

335-3-15-.01 Definitions
335-3-15-.02 General Provisions
335-3-15-.03 Applicability
335-3-15-.04 Synthetic Minor Operating Permit Requirements
335-3-15-.05 Public Participation

335-3-15-.01 Definitions. For the purposes of this Chapter only, the following words and phrases, unless a different meaning is plainly required by the content, shall have the following meanings.

(a) "Act" shall mean the Clean Air Act, as amended, 42 U.S.C. 7401, et seq.

(b) "Air Permit" shall mean any permit issued pursuant to the regulations in Chapter 335-3-14.

(c) "Department" shall mean the Alabama Department of Environmental Management.

(d) "Operating Permit" shall mean any permit issued pursuant to the regulations in Chapter 335-3-16.

(e) "Potential Major Source" shall mean any major source as defined in Chapter 335-3-16 whose actual emissions are less than the major source thresholds.

(f) "Stationary Source" shall mean any building, structure, facility, or installation that emits or may emit any regulated air pollutant as defined in Chapter 335-3-16 or any pollutant listed in Appendix G of this Administrative Code.

(g) "Synthetic Minor Operating Permit" shall mean a permit which restricts a source's potential to emit so that it is a Synthetic Minor Source. Also, those sources whose actual emissions are less than or equal to 50 percent of any applicable major source thresholds and that also comply with the requirements of Rule 335-3-15-.02(10) shall be considered as holding a Synthetic Minor Operating Permit for purposes of complying with Rule 335-3- 16-.02(1) until the Department amends this Rule in the future in accordance with the adoption of

a Rule by the Environmental Protection Agency that codifies a position regarding the subject of this sentence in some form.

(h) "Synthetic Minor Source" shall mean a source whose potential to emit is restricted to less than a major source threshold as defined in Chapter 335-3-16.

Author: Richard E. Grusnick
Statutory Authority: Code of Alabama 1975, §§22-22A-4, 22-22A-5, 22-22A-6, and 22-22A-8.
History: Effective Date: December 28, 1993.
Amended: November 21, 1996; January 16, 1997.

335-3-15-.02 General Provisions.

(1) Any Potential Major Source operating without an Air Permit, an Operating Permit or a Synthetic Minor Operating Permit may continue to operate (or may restart) only if its owner or operator obtains a Synthetic Minor Operating Permit or an Operating Permit prior to a date to be set by the Director (or prior to restarting).

(2) Display of Synthetic Minor Operating Permit. A person who has been granted a Synthetic Minor Operating Permit for any article, machine, equipment, or other contrivance shall keep such permit under file or on display at all times at the site where the article, machine, equipment, or other contrivance is located and will make such a permit readily available for inspection by any and all persons who may request to see it.

(3) The Director shall have the authority to decide cases where an article, machine, equipment, or other contrivance is not clearly subject to nor exempt from the application of this Rule. In addition, the Director may rule that a particular article, machine, equipment, or other contrivance is subject to the application of this Rule even though it is exempt from the system according to Rule 335-3-15-.03. The operator or builder of such an article, machine, equipment, or other contrivance may appeal the Director's classification to the Commission, which shall overrule the Director only if it is shown that he acted arbitrarily and contrary to the purposes of the Act.

(4) The Department may issue a Synthetic Minor Operating Permit subject to conditions which will bring the operation of any article, machine, equipment, or other contrivance within the standards of subparagraph (8)(a) of this Rule in which case the conditions shall be specified in writing. Commencing construction or operation under such a Synthetic Minor Operating Permit shall be deemed acceptance of all the conditions specified. The Department shall issue a Synthetic Minor Operating Permit with revised conditions upon receipt of a new application, if the applicant demonstrates that the article, machine, equipment, or other contrivance can operate within the standards of subparagraph (8)(a) of this Rule under the revised conditions.

(5) Provision of Sampling and Testing Facilities. A person operating or using any article, machine, equipment or other contrivance for which these rules and regulations require a permit shall provide and maintain such sampling and testing facilities as specified in the Synthetic Minor Operating Permit.

(6) Transfer. A Synthetic Minor Operating Permit shall not be transferable whether by operation of law or otherwise, either from one location to another, from one piece of equipment to another, or from one person to another.

(7) Delegation of Synthetic Minor Operating Permit requirements to Local Air Pollution Control Programs.

(a) Local air pollution control programs may receive delegation of authority from the Director to administer the requirements of Chapter 335-3-15 within their jurisdiction provided the local air pollution control program:

1. Adopts regulations which will insure that applicants are required to satisfy the same requirements contained in the Department's regulations; and

2. Adopts regulations which will require that the Department be provided with an opportunity to review the permit application, the analysis of the permit, and proposed permit conditions at least 10 days prior to issuance of a Synthetic Minor Operating Permit.

(b) If the Director of the Department determines that local program procedures for implementing all the portions of Chapter 335-3-15 are inadequate, or are not being effectively carried out, any authority delegated to the local programs to administer Chapter 335-3-15 may be revoked in whole or in part. Any such revocation shall be effective as of the date specified in a Notice of Revocation to the local air pollution control program.

(c) The Department reserves the authority contained in subparagraph (8)(h) of this Rule below, to revoke any Synthetic Minor Operating Permit issued pursuant to this Chapter.

(d) Any Synthetic Minor Operating Permit issued by a local air pollution control program, including all conditions contained therein, is enforceable by the Department.

(8) General Standards for Granting Synthetic Minor Operating Permits.

(a) The Department shall deny a Synthetic Minor Operating Permit if the applicant does not show that every article, machine, equipment, or other contrivance, the use of which may cause the issuance of air contaminants, is so designed, controlled, or equipped with such air pollution control equipment, that it may be expected to operate without emitting or without causing to be emitted air contaminants in violation of this Administrative Code. Issuance of a Synthetic Minor Operating Permit shall not relieve the permittee from complying with any other applicable requirements not contained in this Administrative

Code.

(b) The Department shall deny a Synthetic Minor Operating Permit if the applicant does not present, in writing, a plan whereby the emission of air contaminants by every article, machine, equipment, or other contrivance described in the permit application, will be reduced during periods of an Air Pollution Alert, Air Pollution Warning, and Air Pollution Emergency in accordance with the provisions of Chapter 335-3-2, where such a plan is required.

(c) Before a Synthetic Minor Operating Permit is granted, the Director may require the applicant to provide and maintain such facilities as are necessary for sampling and testing purposes in order to secure information that will disclose the nature, extent, quantity or degree of air contaminants discharged into the atmosphere from the article, machine, equipment, or other contrivance described in the Synthetic Minor Operating Permit. In the event of such a requirement, the Department shall notify the applicant in writing of the required size, number, and location of the sampling platform; the access to the sampling platform; and the utilities for operating and sampling and testing equipment. The Department may also require the applicant to install, use, and maintain such monitoring equipment or methods; sample such emissions in accordance with such methods, at such locations, intervals, and procedures as may be specified; and provide such information as the Department may require.

(d) Before acting on an application for a Synthetic Minor Operating Permit, the Department may require the applicant to furnish further information or further plans or specifications.

(e) If the Department finds that the article, machine, or other contrivance has been constructed not in accordance with the Synthetic Minor Operating Permit application, and if the changes noted are of a substantial nature in that the amount of air contaminants emitted by the article, machine, equipment, or other contrivance may be increased, or in that the effect is unknown, then it shall revoke the Synthetic Minor Operating Permit. The Department shall not accept any further application for a Synthetic Minor Operating Permit until the article, machine, equipment, or other contrivance has been reconstructed in accordance with said Synthetic Minor Operating Permit or until the applicant has proven to the satisfaction of the Department that the change will not cause an increase in the emission of air contaminants.

(f) The Department shall deny a Synthetic Minor Operating Permit where it determines that the construction and operation of such Stationary Source will interfere with attaining or maintaining any primary or secondary standard established by Rule 335-3-1-.03(1). A new Stationary Source or modification will be considered to interfere with attaining or maintaining a standard when such Stationary Source or modification would, at a minimum, exceed the following significance levels at any locality that does not or would not meet the

National Primary and Secondary Ambient Air Quality Standards, as defined in

Rule 335-3-1-.03:

Pollutant	Averaging Time				
	Annual	24 hours	8 hours	3 hours	1 hour
SO_2	1.0 μg/m³	5 μg/m³		25 μg/m³	
PM_{10}	1.0 μg/m³	5 μg/m³			
NO_2	1.0 μg/m³				
CO			0.5 mg/m³		2 mg/m³

(g) A determination may be made by the Director to deny a permit application if the applicant operates other permitted facilities or Stationary Sources within the state which are in substantial noncompliance as determined by the Director, until such noncompliance is corrected or if the Director determines that a permit that results in compliance with applicable air pollution control standards could not be issued, or if issued, could not be complied with.

(h) Revocation of Synthetic Minor Operating Permits. Any Synthetic Minor Operating Permit granted by the Department may be revoked for any of the following causes:

1. failure to comply with any conditions of the permit;

2. failure to establish and maintain such records, make such reports, install, use and maintain such monitoring equipment or methods; and sample such emissions in accordance with such methods at such locations, intervals and procedures as the Department may prescribe in accordance with Rule 335-3-1-.04(2);

3. failure to comply with any provisions of any Departmental administrative order issued concerning the permitted Stationary Source or facility.

4. failure to allow employees of the Department upon proper identification to:

(i) enter any premises, at reasonable times, where any article, machine, equipment, or other contrivance described in Rule 335-3-15-.03 is located or in which any records are required to be kept under provisions of the permit and/or this Administrative Code;

(ii) have access to and copy any records required to be kept under provisions of the permit and/or this Administrative Code;

(iii) inspect any monitoring equipment or practices being maintained pursuant to the permit and/or rules and regulations; and

(iv) have access to and sample any discharge of air contaminants resulting directly or indirectly from the operation of any article, machine, equipment, or other contrivance described in Rule 335-3-15-.03.

5. failure to comply with the Department's Administrative Codes.

6. for any other cause, after a hearing which establishes, in the judgment of the Department, that continuance of the permit is not consistent with the purpose of this Act or regulations adopted pursuant thereto.

(9) Stack Heights.

(a) Definitions. For purposes of this subparagraph, the following terms will have the meanings ascribed in this paragraph.

1. "Emission limitation" and "emission standard" mean a requirement, established by ADEM or the EPA Administrator, which limits the quantity, rate, or concentration of emissions of air pollutants on a continuous basis, including any requirements which limit the level of opacity, prescribe equipment, set fuel specifications, or prescribe operation or maintenance procedures for a source to assure continuous emission reduction.

2. "Stack" means any point in a source designed to emit solids, liquids, or gases into the air, including a pipe or duct pollutant; but not including flares.

3. "A stack in existence" means that the owner or operator had (1) begun, or caused to begin, a continuous program of physical on-site construction of the stack or (2) entered into binding agreements or contractual obligations, which could not be canceled or modified without substantial loss to the owner or operator, to undertake a program of construction of the stack to be completed in a reasonable time.

4. "Dispersion technique" means any technique which attempts to affect the concentration of a pollutant in the ambient air by:

(i) Using that portion of a stack which exceeds good engineering practice stack height;

(ii) Varying the rate of emission of a pollutant according to atmospheric conditions or ambient concentrations of that pollutant; or

(iii) Increasing final exhaust gas plume rise by manipulating source-process parameters, exhaust gas parameters, stack parameters, or combining exhaust gases from several existing stacks into one stack; or other selective handling of exhaust gas streams so as to increase the exhaust gas plume rise.

(iv) The preceding sentence does not include:

(I) The reheating of a gas stream, following use of a pollution control system, for the purpose of returning the gas to the temperature at which it was originally discharged from the facility generating the gas stream;

(II) The merging of exhaust gas streams where:

I. The source owner or operator demonstrates that the facility was originally designed and constructed with such merged gas streams;

II. After July 8, 1985, such merging is part of a change in operation at the facility that includes the installation of pollution controls and is accompanied by a net reduction in the allowable emissions of a pollutant. This exclusion from the definition of "dispersion techniques" shall apply only to the emission limitation for the pollutant affected by such change in operation; or

III. Before July 8, 1985, such merging was part of a change in operation at the facility that included the installation of emissions control equipment or was carried out for sound economic or engineering reasons. Where there was an increase in the emission limitation or, in the event that no emission limitation was in existence prior to the merging, an increase in the quantity of pollutants actually emitted prior to the merging, the Director shall presume that merging was significantly motivated by an intent to gain emissions credit for greater dispersion. Absent a demonstration by the source owner or operator that merging was not significantly motivated by such intent, the Director shall deny credit for the effects of such merging in calculating the allowable emissions for the source;

(III) Smoke management in agricultural or silvicultural prescribed burning programs;

(IV) Episodic restrictions on residential wood burning and open burning; or

(V) Techniques under subparagraph (a)4.(iii) of this paragraph which increase final exhaust gas plume rise where the resulting allowable emissions of sulfur dioxide from the facility do not exceed 5,000 tons per year.

5. "Good engineering practice" (GEP) stack height means the greater of:

(i) 65 meters, measured from the ground-level elevation at the base of the stack:

(ii) For stacks in existence on January 12, 1979, and for which the owner or operator had obtained all applicable permits or approvals required under 40 CFR 51 and 52, provided the owner or operator produces evidence that this equation was actually relied on in establishing an emission limitation;

$$H_g = 2.5H$$

(I.) For all other stacks,

$$H_g = H + 1.5L$$

where

H_g = good engineering practice stack height measured from the ground-level elevation at the base of the stack,

H = height of nearby structure(s) measured from the ground-level elevation at the base of the stack,

L = lesser dimension, height or projected width of nearby structure(s), provided that the Director may require the use of a field study or fluid model to verify GEP stack height for the source; or

(iii) The height demonstrated by a fluid model or a field study approved by the Director, which ensures that the emissions from a stack do not result in excessive concentrations of any air pollutant as a result of atmospheric downwash, wakes, or eddy effects created by the source itself, nearby structures, or nearby terrain features.

6. "Nearby" as used in subparagraph (a)5. of this paragraph is defined for a specific structure or terrain feature and

(i) for purposes of applying the formulas provided in subparagraph (a)5.(ii) of this paragraph means that distance up to five times the lesser of the height or the width dimension of a structure, but not greater than 0.8 km (½ mile), and

(ii) for conducting demonstrations under subparagraph (a)5.(iii) of this paragraph means not greater than 0.8 km (½ mile), except that the portion of a terrain feature may be considered to be nearby which falls within a distance of up to 10 times the maximum height (h_t) of the feature, not to exceed 2 miles if such feature achieves a height (h_t) 0.8 km from the stack that is at least 40 percent of the GEP stack height determined by the formula provided in subparagraph (a)5.(ii)(I) of this paragraph or 26 meters, whichever is greater, as measured from the ground-level elevation at the base of the stack. The height of the structure or terrain feature is measured from the ground-level elevation at the base of the stack.

7. "Excessive concentration" is defined for the purpose of determining GEP stack height under subparagraph (a)5.(iii) of this paragraph and means:

(i) for sources seeking credit for stack height exceeding that established under subparagraph (a)5.(ii) of this paragraph, a maximum ground-level concentration due to emissions from a stack due in whole or part to downwash, wakes, and eddy effects produced by nearby structures or nearby terrain features which individually is at least 40 percent in excess of the maximum concentration experienced in the absence of such downwash, wakes, or eddy effects and which contributes to a total concentration due to emissions from all sources that is greater than a NAAQS. For sources subject to the PSD program (Rule 335-3-14-.04), an excessive concentration alternatively means a maximum ground-level concentration due to emissions from a stack due in whole or part to downwash, wakes, or eddy effects produced by nearby structures or nearby terrain features

which individually is at least 40 percent in excess of the maximum concentration experienced in the absence of such downwash, wakes, or eddy effects and greater than a prevention of significant deterioration increment. The allowable emissions rate to be used in making demonstrations under this Rule shall be prescribed by the new source performance standard that is applicable to the source category unless the owner or operator demonstrates that this emission rate is infeasible. Where such demonstrations are approved by the Director, an alternative emission rate shall be established in consultation with the source owner or operator;

(ii) for sources seeking credit after October 11, 1983, for increases in existing stack heights up to the heights established under subparagraph (a)5.(ii) of this paragraph, either:

(I) a maximum ground-level concentration due in whole or part to downwash, wakes, or eddy effects as provided in subparagraph (a)7.(i) of this paragraph, except that the emission rate specified elsewhere in these regulations (or, in the absence of such a limit, the actual emission rate) shall be used, or

(II) the actual presence of a local nuisance caused by the existing stack, as determined by the Director; and

(iii) for sources seeking credit after January 12, 1979, for a stack height determined under subparagraph (a)5.(ii) of this paragraph, where the Director requires that use of a field study or fluid model to verify GEP stack height, for sources seeking stack height credit after November 9, 1984, based on the aerodynamic influence of cooling towers, and for sources seeking stack height credit after December 31, 1970, based on the aerodynamic influence of structures not adequately represented by the equations in subparagraph (a)5.(ii) of this paragraph, a maximum ground-level concentration due in whole or part to downwash, wakes, or eddy effects that is at least 40 percent in excess of the maximum concentration experienced in the absence of such downwash, wakes, or eddy effects.

(b) Before acting on any Synthetic Minor Operating Permit, the Director shall require that the degree of emission limitation required of any source for control of any air pollutants shall not be affected by so much of any source's stack height that exceeds GEP or by any other dispersion technique, except as provided in subparagraph (c) of this paragraph.

(c) The provisions of subparagraph (b) of this paragraph shall not apply to stack heights in existence, or dispersion techniques implemented, prior to December 31, 1970, except where pollutants are being emitted from such stacks or using such dispersion techniques by sources, as defined in Section 111(a)(3) of the Clean Air Act, which were constructed, or reconstructed or for which major modifications, as defined pursuant to Rules 335-3-14-.05(2)(d) and 335-3-14-.04(2)(b) were carried out after December 31, 1970.

(d) If any existing source, after appropriate application of the preceding

limitations and provisions, is found to exceed or potentially exceed a NAAQS or PSD increment, when operating within previously established emission limitations, the emissions limitations applicable to that source shall be modified so as to eliminate and prevent the exceedance.

(e) If any new source or source modification, after appropriate application of the preceding limitations and provisions, is predicted to exceed a NAAQS or PSD increment when evaluated under emission limitations consistent with other applicable rules and regulations, the emission limitations considered shall be deemed inadequate and different emission limits, based on air quality considerations, shall be made applicable.

(f) If any source provides a field study or fluid modeling demonstration proposing a GEP stack height greater than that allowed by subparagraphs (a)5.(i) and (a)5.(ii) of this paragraph, then the public will be notified of the availability of the study and provided the opportunity for a public hearing before any new or revised emission limitation or permit is approved.

(g) The actual stack height used or proposed by a source shall not be restricted in any manner by the requirements of this paragraph.

(10) Optional Provisions.

(a) Any Potential Major Source whose actual emissions do not exceed 50 percent of any and all applicable major source thresholds, for every consecutive 12 month period, shall be considered to hold a Synthetic Minor Operating Permit until the Department amends this Rule in the future in accordance with the adoption of a Rule by the Environmental Protection Agency that codifies a position regarding the subject of this sentence in some form, provided that:

1. The source maintains adequate records such as emission tests, production data or operational logs sufficient to determine actual emissions, and;

2. Such records are maintained and made available for inspection by the Department for a period of five years in a format suitable for inspection by the Department, and are submitted to the Department within thirty (30) days of receipt of a specific request.

(b) Nothing in paragraph (2) of this Rule shall exempt any source from complying with the new source permitting requirements of Chapter 335-3-14.

Author: Richard E. Grusnick
Statutory Authority: Code of Alabama 1975, §§22-22A-4, 22-22A-5, 22-22A-6, and 22-22A-8.
History: Effective Date: December 28, 1993.
Amended: November 21, 1996; January 16, 1997; September 7, 2000.

335-3-15-.03 Applicability.

The provisions of this Chapter shall apply only to Potential Major Sources, except for those Stationary Sources which are applying for, will apply for, or have obtained Operating Permits.

Author: Richard E. Grusnick
Statutory Authority: Code of Alabama 1975, §§22-22A-4, 22-22A-5, 22-22A-6, and 22-22A-8.
History: Effective Date: December 28, 1993
Amended:

335-3-15-.04 Synthetic Minor Operating Permit Requirements.

(1) General Provisions.

(a) The Synthetic Minor Operating Permit shall include specific conditions that restrict the facility's potential to emit and that are federally enforceable.

(b) Any Stationary Source requesting a Synthetic Minor Operating Permit must undergo the public participation procedures prescribed in Rule 335-3-15-.05.

(c) A Potential Major Source that does not obtain a Synthetic Minor Operating Permit shall apply for an Operating Permit.

(d) The Department shall act, within a reasonable time, on an application for a Synthetic Minor Operating Permit and shall notify the applicant in writing of its approval, conditional approval, or denial.

(e) In the event of a denial of a Synthetic Minor Operating Permit, the Department shall notify the applicant in writing of the reason therefore. Service of this notification may be made in person or by mail, and such service may be proved by the written acknowledgment of the persons served or affidavit of the person making the service. The Department shall not accept a further application unless the applicant has complied with the objections specified by the Department as its reasons for denial of the Synthetic Minor Operating Permit.

(f) The facility shall obtain a Synthetic Minor Operating Permit prior to beginning operation of the new or modified Stationary Source and shall notify the Department at least ten (10) days prior to beginning such operation.

(g) Any Stationary Source applying for a Synthetic Minor Operating Permit shall submit applications for a Synthetic Minor Operating Permit at least 10 days prior to construction except as specified in subparagraph (3)(c) of this Rule.

(h) The holder of a Synthetic Minor Operating Permit shall comply with all conditions contained in such permit, as well as all applicable provisions of this

Administrative Code. Such conditions shall be permanent, quantifiable and otherwise enforceable as a practical matter. Synthetic Minor Operating Permits which do not conform to the provision in this Chapter and the requirements of EPA's underlying regulations may be deemed not "federally enforceable" by EPA.

(2) Existing Potential Major Sources.

(a) Any facility that would request a Synthetic Minor Operating Permit shall apply to the Department within one year after approval by EPA of the Operating Permit regulations in Chapter 335-3-16.

(b) Any facility possessing an Operating Permit or whose potential emissions require it to obtain an Operating Permit may, at any time, accept federally enforceable permit restrictions which would allow it to obtain a Synthetic Minor Operating Permit.

(3) New Potential Major Sources.

(a) Any new Potential Major Source which commences construction after November 15, 1995, may apply to the Department for a Synthetic Minor Operating Permit. This application shall be accurately completed and submitted to the Department prior to such construction.

(b) A Synthetic Minor Operating Permit for a new Potential Major Source shall expire and the application shall be canceled two years from the date of issuance of the Synthetic Minor Operating Permit if construction has not begun.

(c) Any new Stationary Source applying for a Synthetic Minor Operating Permit at a greenfield site shall not initiate construction until the Synthetic Minor Operating Permit has been issued. "Greenfield site" shall have the same meaning as defined in Rule 335-3-14-.01(7)(a)1.(i).

(4) Modifications to Synthetic Minor Sources.

(a) Any Stationary Source subject to the regulations in this Chapter that is modified so that it becomes a major source as defined in Rule 335-3-16-.01(15) shall apply for an Operating Permit within twelve (12) months of beginning operation.

(b) Any modification which would require a change to existing permit conditions that restrict the facility's potential to emit or require new conditions that restrict the facility's potential to emit, as required in subparagraph (1)(a) of this Rule, must undergo the public participation procedures prescribed in Rule 335-3-15-.05.

(5) Exceptions to Violations of Emission Limits.

(a) The Director may, in the Synthetic Minor Operating Permit, exempt on a case by case basis any exceedances of emission limits or permit conditions which

cannot reasonably be avoided, such as during periods of start-up and shut-down or load change.

(b) The Director may exempt on a case by case basis exceedances of emission limits and permit conditions which cannot reasonably be avoided as a result of an "emergency" situation.

1. An "emergency" means any situation arising from sudden and reasonably unforeseeable events beyond the control of the facility, including acts of God. These are situations that require immediate corrective action(s) to restore normal operation, and that cause the facility to exceed a technology based emission limitation set by the permit, due to unavoidable increases in emissions attributable to the emergency. An emergency shall not include exceedances of the permit emission limitations caused by improperly designed equipment, lack of preventive maintenance, careless or improper operation, or operator error.

2. Exceedances of emissions limitations during emergencies at a facility may be exempted as being violations provided that:

(i) the permittee identifies the cause(s) of the emergency;

(ii) the permitted facility was being properly operated until such a time as the emergency occurred;

(iii) during the period of which the emergency occurred, the permittee took all reasonable steps to minimize levels of emissions that exceeded the standards, or other requirements of the permit; and

(iv) the permittee submitted notice of the emergency to the Department within two (2) working days of the time when the emissions limitations were exceeded as a result of the emergency. Such notice shall include those deviations attributable to upset conditions as defined in the permit, the probable cause of said deviations, and any corrective actions or preventive measures that were taken. Within 5 working days of the emergency, a written documentation of what was reported in the notice of the emergency shall be submitted to the Department.

3. The Director shall be the sole determiner of whether an emergency has occurred.

4. This provision is in addition to any emergency or upset provision contained in any applicable requirement of the permit or the regulations.

Author: Richard E. Grusnick
Statutory Authority: Code of Alabama 1975, §§22-22A-4, 22-22A-5, 22-22A-6, and 22-22A-8.
History: Effective Date: December 28, 1993.
Amended: November 21, 1996.

335-3-15-.05 Public Participation.

(a) The provisions of this Rule apply only to potential major sources as specified in Rules 335-3-15-.04(1)(b) and -.04(4)(b). Notice shall be posted on the Department's web site for the duration of the public comment period and transmitted to a list developed by the Department for persons desiring notice of permit action, including persons who have requested in writing to be on such a list. The notice shall contain a link to the proposed permit. A copy of the notice shall also be provided to EPA;

(b) The notice shall identify the affected facility; the name and address of the permittee; the address of the Department; the activity or activities involved in the permit action; the emissions change involved in any permit modification; the name, address, and telephone number of a person (or an email or web site address) from whom interested persons may obtain additional information, including copies of the permit draft, the application, all relevant supporting materials, except for information entitled to be kept confidential, and all other materials available to the Department that are relevant to the permit decision; a brief description of the comment procedures required by this Rule; and the time and place of any hearing that may be held, including a statement of procedures to request a hearing (unless a hearing has already been scheduled);

(c) The Department shall provide at least 15 days for public comment; and

(d) The Department shall keep a record of the commenters and also of the issues raised during the public participation process.

Author: Richard E. Grusnick
Statutory Authority: Code of Alabama 1975, §§22-22A-4, 22-22A-5, 22-22A-6, and 22-22A-8.
History: Effective Date: December 28, 1993.
Amended: November 21, 1996; June 2, 2017.

ALABAMA DEPARTMENT OF ENVIRONMENTAL MANAGEMENT
AIR DIVISION - AIR POLLUTION CONTROL PROGRAM

CHAPTER 335-3-16
MAJOR SOURCE OPERATING PERMITS

TABLE OF CONTENTS

335-3-16-.01 Definitions
335-3-16-.02 General Provisions
335-3-16-.03 Applicability
335-3-16-.04 Permit Application Requirements
335-3-16-.05 Permit Content
335-3-16-.06 Federally Enforceable Requirements
335-3-16-.07 Compliance Requirements
335-3-16-.08 General Permits
335-3-16-.09 Temporary Sources
335-3-16-.10 Permit Shield
335-3-16-.11 Exceptions to Violations of Emissions Limits
335-3-16-.12 Permit Issuance
335-3-16-.13 Permit Modifications or Amendments
335-3-16-.14 Off-Permit Changes
335-3-16-.15 Permit Review by EPA, Affected States and Public

335-3-16-.01 Definitions.

(1) For the purposes of this chapter only, the following words and phrases, unless a different meaning is plainly required by the content, shall have the following meanings.

(a) "Act" means the Clean Air Act, as amended, 42 U.S.C. 7401, et seq.

(b) "Affected source" means a source that includes one or more affected units subject to emission reduction requirements or limitations in Title IV of the Act.

(c) "Affected States" are all States:

1. Whose air quality may be affected and that are contiguous to the State in which permit modification or permit renewal is being proposed; or

2. That are within 50 miles of the permitted source.

(d) "Affected Unit" means any unit subject to emission reduction requirements or limitations under Title IV of the Act.

(e) "Applicable Requirement" means all of the following as they apply to

emissions units (including requirements that have been promulgated or approved by EPA through rule making at the time of issuance but have future effective compliance dates):

1. Any standard or other requirement provided for in Alabama's State Implementation Plan approved or promulgated by EPA through rulemaking in Part 51 of Title 40 in the Code of Federal Regulations that implements the relevant requirements of the Act, including any revisions to that plan promulgated in Subpart B of Part 52 of Title 40 in the Code of Federal Regulation;

2. Any term or condition of any preconstruction permits issued pursuant to regulations approved or promulgated through rule making under Title I, including parts C or D, of the Act; (Air Pollution Prevention and Control, Prevention of Significant Deterioration and Plan Requirement for nonattainment areas);

3. Any standard or other requirement in chapter 335-3-10 (NSPS); including Section 111(d);

4. Any standard or other requirement in chapter 335-3-11 (NESHAPS), including any requirement concerning accident prevention under Section 112(r)(7) of the Act;

5. Any standard or other requirement of the acid rain program under Title IV (Acid Deposition Control) of the Act or the regulations promulgated thereunder;

6. Any requirements established pursuant to Section 504(b) or Section 114(a)(3) of the Act;

7. Any standard or other requirement governing solid waste incineration, under Section 129 of the Act;

8. Any standard or other requirement for consumer and commercial products, under Section 183(e) of the Act;

9. Any standard or other requirement for tank vessels under Section 183(f) of the Act;

10. Any standard or other requirement of the regulations promulgated to protect stratospheric ozone (Title VI of the Act, Stratospheric Ozone Protection) unless the Administrator has determined that such requirements need not be contained in a Title V permit; and

11. Any national ambient air quality standard as defined in rule 335-3-1-.03 or increment as defined in rule 335-3-14-.04(3) or visibility requirement in rule 335-3-14-.04(15), but only as it would apply to temporary sources permitted pursuant to rule 335-3-16-.09.

(f) "<u>the Department"</u> means the Alabama Department of Environmental Management.

(g) "Designated Representative" means a responsible person or official authorized by the owner or operator of an Affected Unit to represent the owner or operator in matters pertaining to the holding, transfer, or disposition of allowances allocated to an Affected Unit, and the submission of and compliance with permits, permit applications, and compliance plans for the Affected Unit.

(h) "Draft Permit" means the version of a permit for which the Department offers public participation under rule 335-3-16-.15(4) or affected State review under rule 335-3-16-.15(2) of this chapter.

(i) "Emissions Allowable under the Permit" means a federally enforceable permit term or condition determined at issuance of the permit to be required by an applicable requirement that establishes an emissions limit (including a work practice standard) or a federally enforceable emissions cap that the source has assumed to avoid an applicable requirement to which the source would otherwise be subject.

(j) "Emissions Unit" means any part or activity of a stationary source that emits or has the potential to emit any regulated air pollutant or any pollutant listed under Section 112(b) of the Act. This term is not meant to alter or affect the definition of the term "unit" for purposes of Title IV (Acid Deposition Control) of the Act.

(k) "The EPA" or "the Administrator" means the Administrator of the EPA or his/her designee.

(l) "Final Permit" means the version of a permit issued by the Department that has completed all review procedures required by rules 335-3-16-.12 and 335-3-16-.15 of this chapter.

(m) "Fugitive Emissions" means those emissions which could not reasonably pass through a stack, chimney, vent, or other functionally equivalent opening.

(n) "General Permit" means a permit that meets the requirements of rule 335-3-16-.08.

(o) "Insignificant Activity" generally means any air emissions or air emissions unit at a plant that has the potential to emit less than 5 tons per year of any criteria pollutant or less than 1000 pounds per year of any pollutant listed in Appendix G of ADEM Admin. Code r. 335-3. Subject to EPA review and approval, the Director may determine that certain types or classes of units may be considered insignificant at higher emission levels, or that, due to the nature of the pollutant(s) emitted, a unit may be considered significant at a lower emission rate. The Director shall maintain lists of air emissions or air emission units which are considered to be insignificant without a determination of emission levels by the permittee. Changes to this list are subject to EPA review and approval. Activities subject to applicable requirements as defined in paragraph (e) of this rule shall not be classified as insignificant.

(p) "Interim Approval" means a conditional approval of ADEM Admin. Code 335-3-16 by the Administrator that may extend the implementation deadline of this Administrative Code.

(q) "Major Source" means any stationary source (or any group of stationary sources that are located on one or more contiguous or adjacent properties, and are under common control of the same person [or persons under common control)] belonging to a single major industrial grouping and that are described in paragraph (1) or (2) of this definition. For the purposes of defining "major source," a stationary source or group of stationary sources shall be considered part of a single industrial grouping if all of the pollutant emitting activities at such source or group of sources on contiguous or adjacent properties belong to the same Major Group (i.e., all have the same two digit code) as described in the Standard Industrial Classification Manual, 1987.

1. A major source under Section 112 of the Act, which is defined as:

(i) For pollutants other than radionuclides, any stationary source or group of stationary sources located within a contiguous area and under common control that emits or has the potential to emit, in the aggregate, 10 tons per year (tpy) or more of any hazardous air pollutant which has been listed in Appendix G of this Administrative Code, 25 tpy or more of any combination of such hazardous air pollutants, or such lesser quantity as the Administrator may establish by rule. Notwithstanding the preceding sentence, emissions from any oil or gas exploration or production well (with its associated equipment) and emissions from any pipeline compressor or pump station shall not be aggregated with emissions from other similar units, whether or not such units are in a contiguous area or under common control, to determine whether such units or stations are major sources; or

(ii) For radionuclides, "major source" shall have the meaning specified by the Administrator by rule.

2. A major stationary source of air pollutants, as defined in Section 302 of the Act, that directly emits or has the potential to emit, 100 tpy or more of any regulated air pollutant (including any major source of fugitive emissions of any such pollutant, as determined by rule by the Administrator). The fugitive emissions of a stationary source shall not be considered in determining whether it is a major stationary source for the purposes of this chapter, unless the source belongs to one of the following categories of stationary source:

(i) Coal cleaning plants (with thermal dryers);

(ii) Kraft pulp mills;

(iii) Portland cement plants;

(iv) Primary zinc smelters;

(v) Iron and steel mills;

(vi) Primary aluminum ore reduction plants;

(vii) Primary copper smelters;

(viii) Municipal incinerators capable of charging more than 250 tons of refuse per day;

(ix) Hydrofluoric, sulfuric, or nitric acid plants;

(x) Petroleum refineries;

(xi) Lime plants;

(xii) Phosphate rock processing plants;

(xiii) Coke oven batteries;

(xiv) Sulfur recovery plants;

(xv) Carbon black plants (furnace process);

(xvi) Primary lead smelters;

(xvii) Fuel conversion plants;

(xviii) Sintering plants;

(xix) Secondary metal production plants;

(xx) Chemical process plants;

(xxi) Fossil-fuel boilers (or combination thereof) totaling more than 250 million British thermal units per hour heat input;

(xxii) Petroleum storage and transfer units with a total storage capacity exceeding 300,000 barrels;

(xxiii) Taconite ore processing plants;

(xxiv) Glass fiber processing plants;

(xxv) Charcoal production plants;

(xxvi) Fossil-fuel fired steam electric plants of more than 250 million British thermal units per hour heat input; or

(xxvii) All other stationary source categories regulated by a standard promulgated under chapters 10 and 11 of this Administrative Code.

3. No source shall be considered a major source for the purposes of this Chapter due solely to the emissions of greenhouse gas emissions.

(r) "Operating Permit" or "Permit" (unless the context suggests otherwise) means any permit or group of permits that is issued, renewed, amended, or revised pursuant to this chapter.

(s) "Permit Modification" means a revision to a permit that meets the requirements of rules 335-3-16-.13(3) and (4).

(t) "Permit Revision" means any permit modification or administrative permit amendment.

(u) "Potential to Emit" means the maximum capacity of a stationary source to emit any air pollutant under its physical and operational design. Any physical or operational limitation on the capacity of a source's potential to emit an air pollutant, including air pollution control equipment and restrictions on hours of operation or on the type or amount of material combusted, stored, or processed, shall be treated as part of its design if the limitation is enforceable by the Administrator. This term does not alter or affect the use of this term for any other purposes under the Act, or the term "capacity factor" as used in Title IV (Acid Deposition Control) of the Act or the regulations promulgated thereunder.

(v) "Proposed Permit" means the version of a permit that the Department proposes to issue and forwards to the Administrator for review in compliance with rule 335-3-16-.15(2).

(w) "Regulated Air Pollutant" means the following:

1. Nitrogen oxides or any volatile organic compounds;

2. Any pollutant for which a national ambient air quality standard has been promulgated;

3. Any pollutant that is subject to any standard promulgated under Section 111 of the Act;

4. Any Class I or II substance subject to a standard promulgated under or established by Title VI (Stratospheric Ozone Protection) of the Act; or

5. Any pollutant subject to a standard promulgated under Section 112 or other requirements established under Section 112 of the Act, including Sections 112(g), (j), and (r) of the Act, including the following:

(i) Any pollutant subject to requirements under Section 112(j) of the Act. If the Administrator fails to promulgate a standard by the date established pursuant to Section 112(e) of the Act, any pollutant for which a subject source would be major shall be considered to be regulated on the date 18 months after the applicable date established pursuant to Section 112(e) of the Act; and

(ii) Any pollutant for which the requirements of Section 112(g)(2) of the Act have been met, but only with respect to the individual source subject to Section 112(g)(2) requirement.

6. As of July 1, 2011 and after, greenhouse gases as defined in 335-3-16-.01(cc).

(x) "Renewal" means the process by which a permit is reissued at the end of its term.

(y) "Responsible Official" means one of the following:

1. For a corporation: a president, secretary, treasurer, or vice-president of the corporation in charge of a principal business function, or any other person who performs similar policy or decision-making functions for the corporation, or a duly authorized representative of such person if the representative is responsible for the overall operation of one or more manufacturing, production, or operating facilities applying for or subject to a permit and either:

(i) The facilities employ more than 250 persons or have gross annual sales or expenditures exceeding $25 million (in second quarter 1980 dollars); or

(ii) The delegation of authority to such representatives is approved in advance by the Department;

2. For a partnership or sole proprietorship: a general partner or the proprietor, respectively;

3. For a municipality, State, Federal, or other public agency: Either a principal executive officer or ranking elected official. For the purposes of this chapter, a principal executive officer of a Federal agency includes the chief executive officer having responsibility for the overall operations of a principal geographic unit of the agency (e.g., a Regional Administrator of EPA); or

4. For affected sources:

(i) The designated representative in so far as actions, standards, requirements, or prohibitions under Title IV (Acid Deposition Control) of the Act or the regulations promulgated thereunder are concerned; and

(ii) The designated representative for any other purposes under this chapter.

(z) "Section 502(b)(10) Changes" are changes that contravene an express permit term. Such changes do not include changes that would violate applicable requirements or contravene federally enforceable permit terms and conditions that are monitoring (including test methods), record keeping, reporting, or compliance certification requirements.

(aa) "Stationary Source" means any building, structure, facility, or

installation that emits or may emit any regulated air pollutant or any pollutant listed under Appendix G of this Administrative Code.

(bb) "Trivial Activity" means any air emissions from a unit that is considered inconsequential, as determined by the Director. The Director shall maintain a list of air emission units that have been determined to be trivial activities.

(cc) Greenhouse gases (GHGs) means the aggregate of: carbon dioxide, nitrous oxide, methane, hydrofluorocarbons, perfluorocarbons, and sulfur hexafluoride.

(dd) CO_2 equivalent emissions (CO_2e) shall represent the amount of GHGs emitted as computed by the following:

1. Multiplying the mass amount of emissions (TPY) for each of the six greenhouse gases in the pollutant GHGs by the gas's associated global warming potential as listed in Appendix I.

2. Sum the resultant value determined in subparagraph (dd)1. for each gas to calculate the TPY of CO_2e.

Author: Richard E. Grusnick; Ronald W. Gore.
Statutory Authority: Code of Alabama 1975, §§22-22A-4, 22-22A-5, 22-22A-6, and 22-22A-8.
History: Effective Date: December 28, 1993.
Amended: November 21, 1996; September 7, 2000; October 3, 2002; May 23, 2011; May 28, 2013; November 25, 2014.

335-3-16-.02 General Provisions.

(1) Any Major Source operating without an Air Permit, an Operating Permit or a Synthetic Minor Operating Permit (as defined in chapters 14, 15 and 16 of this Administrative Code) may continue to operate (or may restart) only if its owner or operator obtains an Operating Permit or a Synthetic Minor Operating Permit prior to a date to be set by the Director (or prior to restarting).

(2) Display of Operating Permit. A person who has been granted an Operating Permit for any article, machine, equipment, or other contrivance shall keep such permit under file or on display at all times at the site where the article, machine, equipment, or other contrivance is located and will make such a permit readily available for inspection by any and all persons who may request to see it.

(3) The Director shall have the authority to decide cases where an article, machine, equipment, or other contrivance is not clearly subject to nor exempt from the application of this rule. The operator or builder of such an article, machine, equipment, or other contrivance may appeal the Director's classification to the Commission, which shall overrule the Director only if it is shown that he acted arbitrarily and contrary to the purposes of the Act.

(4) The Director may issue an Operating Permit subject to conditions which will bring the operation of any article, machine, equipment, or other contrivance within the standards of subparagraph (8)(a) of this rule in which case the conditions shall be specified in writing. Commencing construction or operation under such an Operating Permit shall be deemed acceptance of all the conditions specified. The Director may issue an Operating Permit with revised conditions upon receipt of a new application, if the applicant demonstrates that the article, machine, equipment, or other contrivance can operate within the standards of subparagraph (8)(a) of this rule under the revised conditions.

(5) Provision of Sampling and Testing Facilities. A person operating or using any article, machine, equipment or other contrivance for which this Administrative Code require a permit shall provide and maintain such sampling and testing facilities as specified in the Operating Permit.

(6) Transfer. An Operating Permit shall not be transferable whether by operation of law or otherwise, either from one location to another, from one piece of equipment to another, or from one person to another, except as provided in rule 335-3-16-.13(1)(a)5.

(7) Delegation of Operating Permit requirements to Local Air Pollution Control Programs.

(a) Local air pollution control programs may receive delegation of authority from the Director to administer the requirements of chapter 335-3-16 of the ADEM Administrative Code within their jurisdiction provided the local air pollution control program:

1. adopts regulations insuring applicants are required to satisfy the same requirements as contained in the Department's regulations; and

2. adopts regulations which require the Director to be provided with an opportunity to review the permit application, the analysis of the permit, and proposed permit conditions at least 30 days prior to issuance of an Operating Permit.

(b) If the Director of the Department determines that local program procedures for implementing all the portions of chapter 335-3-16 are inadequate, or are not being effectively carried out, any authority delegated to the local programs to administer chapter 335-3-16 may be revoked in whole or in part. Any such revocation shall be effective as of the date specified in a Notice of Revocation to the local air pollution control program.

(c) The Director reserves the authority contained in subparagraph (8)(e) of this rule, to revoke any Operating Permit issued pursuant to this chapter.

(d) Any Operating Permit issued by a local air pollution control program, including all conditions contained therein, is enforceable by the Department.

(8) General Standards for Granting Operating Permits.

(a) The Director shall deny an Operating Permit if the applicant does not show that every article, machine, equipment, or other contrivance, the use of which may cause the issuance of air contaminants, is so designed, controlled, or equipped with such air pollution control equipment, that it is expected to operate without emitting or without causing to be emitted air contaminants in violation of this Administrative Code.

(b) The Director shall deny an Operating Permit if the applicant does not present, in writing, a plan whereby the emission of air contaminants by every article, machine, equipment, or other contrivance described in the permit application, will be reduced during periods of an Air Pollution Alert, Air Pollution Warning, and Air Pollution Emergency in accordance with the provisions of chapter 335-3-2, where such plan is required.

(c) Before an Operating Permit is granted, the Director may require the applicant to provide and maintain such facilities as are necessary for sampling and testing purposes in order to secure information that will disclose the nature, extent, quantity or degree of air contaminants discharged into the atmosphere from the article, machine, equipment, or other contrivance described in the Operating Permit. In the event of such a requirement, the Director shall notify the applicant in writing of the required size, number, and location of the sampling platform; the access to the sampling platform; and the utilities for operating and sampling and testing equipment. The Director may also require the applicant to install, use, and maintain such monitoring equipment or methods, including enhanced monitoring methods prescribed under Section 504(b) or Section 114(a)(3); sample such emissions in accordance with such methods, at such locations, intervals, and procedures as may be specified; and provide such information as the Director may require.

(d) Before acting on an application for an Operating Permit, the Director may require the applicant to furnish further information or further plans or specifications.

(e) If the Director finds that the article, machine, or other contrivance has been constructed not in accordance with the Operating Permit application, and if the changes noted are of a substantial nature in that the amount of air contaminants emitted by the article, machine, equipment, or other contrivance may be increased, or in that the effect is unknown, then he shall revoke the Operating Permit. The Director shall not accept any further application for an Operating Permit until the article, machine, equipment, or other contrivance has been reconstructed in accordance with said Operating Permit or until the applicant has proven to the satisfaction of the Director that the change will not cause an increase in the emission of air contaminants.

(9) Revocation of Operating Permits. Any Operating Permit granted by the Director may be revoked for any of the following causes:

(a) failure to comply with any conditions of the permit;

(b) failure to establish and maintain such records, make such reports,

install, use and maintain such monitoring equipment or methods; and sample such emissions in accordance with such methods at such locations, intervals and procedures as the Director may prescribe in accordance with rule 335-3-1-.04(2);

(c) failure to comply with any provisions of any Departmental administrative order issued concerning the permitted Stationary Source or facility;

(d) failure to allow employees of the Department upon proper identification, to:

1. enter any premises where any article, machine, equipment, or other contrivance described in rule 335-3-16-.03(1) is located or in which any records are required to be kept under provisions of the permit and/or this Administrative Code;

2. have access to and copy any records required to be kept under provisions of the permit and/or this Administrative Code;

3. inspect any monitoring equipment or practices being maintained pursuant to the permit and/or this Administrative Code; and

4. have access to and sample any discharge of air contaminants resulting directly or indirectly from the operation of any article, machine, equipment, or other contrivance described in rule 335-3-16-.03(1).

(e) failure to comply with this or any other Administrative Code of the Department.

(f) for any other cause, after a hearing which establishes, in the judgment of the Department, that continuance of the permit is not consistent with the purpose of the Act or this Administrative Code.

(10) Stack Heights.

(a) Definitions. For purposes of this paragraph, the following terms will have the meanings ascribed in this subparagraph.

1. "Emission limitation" and "emission standard" mean a requirement, established by ADEM or the EPA Administrator, which limits the quantity, rate, or concentration of emissions of air pollutants on a continuous basis, including any requirements which limit the level of opacity, prescribe equipment, set fuel specifications, or prescribe operation or maintenance procedures for a source to assure continuous emission reduction.

2. "Stack" means any point in a source designed to emit solids, liquids, or gases into the air, including a pipe or duct but not including flares.

3. "A stack in existence" means that the owner or operator had (1) begun, or caused to begin, a continuous program of physical on-site construction of the stack or (2) entered into binding agreements or contractual obligations, which could

not be canceled or modified without substantial loss to the owner or operator, to undertake a program of construction of the stack to be completed in a reasonable time.

4. "Dispersion technique" means any technique which attempts to affect the concentration of a pollutant in the ambient air by:

(i) Using that portion of a stack which exceeds good engineering practice stack height;

(ii) Varying the rate of emission of a pollutant according to atmospheric conditions or ambient concentrations of that pollutant; or

(iii) Increasing final exhaust gas plume rise by manipulating source-process parameters, exhaust gas parameters, stack parameters, or combining exhaust gases from several existing stacks into one stack; or other selective handling of exhaust gas streams so as to increase the exhaust gas plume rise.

(iv) The preceding sentence does not include:

(I) The reheating of a gas stream, following use of a pollution control system, for the purpose of returning the gas to the temperature at which it was originally discharged from the facility generating the gas stream; or,

(II) The merging of exhaust gas streams where:

I. The source owner or operator demonstrates that the facility was originally designed and constructed with such merged gas streams;

II. After July 8, 1985, such merging is part of a change in operation at the facility that includes the installation of pollution controls and is accompanied by a net reduction in the allowable emissions of a pollutant. This exclusion from the definition of "dispersion techniques" shall apply only to the emission limitation for the pollutant affected by such change in operation; or

III. Before July 8, 1985, such merging was part of a change in operation at the facility that included the installation of emissions control equipment or was carried out for sound economic or engineering reasons. Where there was an increase in the emission limitation or, in the event that no emission limitation was in existence prior to the merging, an increase in the quantity of pollutants actually emitted prior to the merging, the Director shall presume that merging was significantly motivated by an intent to gain emissions credit for greater dispersion. Absent a demonstration by the source owner or operator that merging was not significantly motivated by such intent, the Director shall deny credit for the effects of such merging in calculating the allowable emissions for the source;

(III) Smoke management in agricultural or silvicultural prescribed burning programs;

(IV) Episodic restrictions on residential woodburning and open burning; or

(V) Techniques under subparagraph (a)4.(iii) of this paragraph which increase final exhaust gas plume rise where the resulting allowable emissions of sulfur dioxide from the facility do not exceed 5,000 tons per year.

5. "Good engineering practice" (GEP) stack height means the greater of:

(i) 65 meters measured from the ground-level elevation at the base of the stack:

(ii) For stacks in existence on January 12, 1979, and for which the owner or operator had obtained all applicable permits or approvals required under 40 CFR 51 and 52, provided the owner or operator produces evidence that this equation was actually relied on in establishing an emission limitation;

$$H_g = 2.5H$$

(I) For all other stacks,

$$H_g = H + 1.5L,$$

where

H_g = good engineering practice stack height measured from the ground-level elevation at the base of the stack,

H = height of nearby structure(s) measured from the ground-level elevation at the base of the stack,

L = lesser dimension, height or projected width of nearby structure(s), provided that the Director may require the use of a field study or fluid model to verify GEP stack height for the source; or

(iii) The height demonstrated by a fluid model or a field study approved by the Director, which ensures that the emissions from a stack do not result in excessive concentrations of any air pollutant as a result of atmospheric downwash, wakes, or eddy effects created by the source itself, nearby structures, or nearby terrain features.

6. "Nearby" as used in subparagraph (a)5. of this paragraph is defined for a specific structure or terrain feature and

(i) for purposes of applying the formulas provided in subparagraph (a)5.(ii) of this paragraph means that distance up to five times the lesser of the height or the width dimension of a structure, but not greater than 0.8 km (1/2 mile), and

(ii) for conducting demonstrations under subparagraph (a)5.(iii) of this paragraph means not greater than 0.8 km (1/2 mile), except that the portion of a terrain feature may be considered to be nearby which falls within a distance of up

to 10 times the maximum height (h_t) of the feature, not to exceed 2 miles if such feature achieves a height (h_t) 0.8 km from the stack that is at least 40 percent of the GEP stack height determined by the formula provided in subparagraph (a)5.(ii)(I) of this paragraph or 26 meters, whichever is greater, as measured from the ground-level elevation at the base of the stack. The height of the structure or terrain feature is measured from the ground-level elevation at the base of the stack.

7. "Excessive concentration" is defined for the purpose of determining GEP stack height under subparagraph (a)5.(iii) of this paragraph and means:

(i) for sources seeking credit for stack height exceeding that established under subparagraph (a)5.(ii) of this paragraph, a maximum ground-level concentration due to emissions from a stack due in whole or part to downwash, wakes, and eddy effects produced by nearby structures or nearby terrain features which individually is at least 40 percent in excess of the maximum concentration experienced in the absence of such downwash, wakes, or eddy effects and which contributes to a total concentration due to emissions from all sources that is greater than a NAAQS. For sources subject to the PSD program (rule 335-3-14-.04), an excessive concentration alternatively means a maximum ground-level concentration due to emissions from a stack due in whole or part to downwash, wakes, or eddy effects produced by nearby structures or nearby terrain features which individually is at least 40 percent in excess of the maximum concentration experienced in the absence of such downwash, wakes, or eddy effects and greater than a prevention of significant deterioration increment. The allowable emissions rate to be used in making demonstrations under this rule shall be prescribed by the new source performance standard that is applicable to the source category unless the owner or operator demonstrates that this emission rate is infeasible. Where such demonstrations are approved by the Director, an alternative emission rate shall be established in consultation with the source owner or operator;

(ii) for sources seeking credit after October 11, 1983, for increases in existing stack heights up to the heights established under subparagraph (a)5.(ii) of this paragraph, either:

(I) a maximum ground-level concentration due in whole or part to downwash, wakes, or eddy effects as provided in subparagraph (a)7.(i) of this paragraph, except that the emission rate specified elsewhere in this Administrative Code (or, in the absence of such a limit, the actual emission rate) shall be used, or

(II) the actual presence of a local nuisance caused by the existing stack, as determined by the Director; and

(iii) for sources seeking credit after January 12, 1979, for a stack height determined under subparagraph (a)5.(ii) of this paragraph where the Director requires that use of a field study or fluid model to verify GEP stack height, for sources seeking stack height credit after November 9, 1984, based on the aerodynamic influence of cooling towers, and for sources seeking stack height credit after December 31, 1970, based on the aerodynamic influence of structures

not adequately represented by the equations in subparagraph (a)5.(ii) of this paragraph, a maximum ground-level concentration due in whole or part to downwash, wakes, or eddy effects that is at least 40 percent in excess of the maximum concentration experienced in the absence of such downwash, wakes, or eddy effects.

(b) Before acting on any Major Source Operating Permit, the Director shall require that the degree of emission limitation required of any source for control of any air pollutants shall not be affected by so much of any source's stack height that exceeds GEP or by any other dispersion technique, except as provided in subparagraph (c) of this paragraph.

(c) The provisions of subparagraph (b) of this paragraph shall not apply to stack heights in existence, or dispersion techniques implemented, prior to December 31, 1970, except where pollutants are being emitted from such stacks or using such dispersion techniques by sources, as defined in Section 111(a)(3) of the Clean Air Act, which were constructed, or reconstructed or for which major modifications, as defined pursuant to rules 335-3-14-.05(2)(d) and 335-3-14-.04(2)(b), were carried out after December 31, 1970.

(d) If any existing source, after appropriate application of the preceding limitations and provisions, is found to exceed or potentially exceed a NAAQS or PSD increment, when operating within previously established emission limitations, the emissions limitations applicable to that source shall be modified so as to eliminate and prevent the exceedance.

(e) If any new source or source modification, after appropriate application of the preceding limitations and provisions, is predicted to exceed a NAAQS or PSD increment when evaluated under emission limitations consistent with other applicable rules and regulations, the emission limitations considered shall be deemed inadequate and different emission limits, based on air quality considerations, shall be made applicable.

(f) If any source provides a field study or fluid modeling demonstration proposing a GEP stack height greater than that allowed by subparagraphs (a)5.(i) and (a)5.(ii) of this paragraph, then the public will be notified of the availability of the study and provided the opportunity for a public hearing before any new or revised emission limitation or permit is approved.

(g) The actual stack height used or proposed by a source shall not be restricted in any manner by requirements of this paragraph.

Author: Richard E. Grusnick.
Statutory Authority: Code of Alabama 1975, §§22-22A-4, 22-22A-5, 22-22A- 6, and 22-22A-8.
History: Effective Date: December 28, 1993.
Amended: November 21, 1996; January 13, 2000; September 7, 2000.

335-3-16-.03 Applicability.

(1) Except as exempted under paragraph (2) below and elsewhere herein, the following sources are subject to the permitting requirements under this Administrative Code:

(a) Any major source as defined under rule 335-3-16-.01 of this chapter;

(b) Any source subject to a standard, limitation, or other requirement under chapters 335-3-10 or 335-3-11 of this Administrative Code;

(c) Any affected source as defined under rule 335-3-16-.01 of this chapter;

(2) The following sources are exempt from the requirements of this chapter:

(a) Non-major sources subject to chapters 335-3-10 or 335-3-11 of this Administrative Code prior to July 21, 1992;

(b) Non-major sources subject to chapters 335-3-10 or 335-3-11 of this Administrative Code which have an applicability date after July 21, 1992 that have been exempted by the Administrator from the requirements of 40 CFR 70; and

(c) Asbestos demolitions and renovation sources subject to chapter 335-3-11 of this Administrative Code.

Author: Richard E. Grusnick.
Statutory Authority: Code of Alabama 1975, §§22-22A-4, 22-22A-5, 22-22A-6, and 22-22A-8.
History: Effective Date: December 28, 1993.
Amended: November 21, 1996.

335-3-16-.04 Permit Application Requirements.

(1) Upon becoming subject to this Administrative Code, a source must submit an application, as described in this rule within 12 months. The Director may require some sources to submit their applications earlier than 12 months after the rules in this chapter become applicable if it is determined that an earlier submittal is necessary to satisfy the requirements in rule 335-3-16-.12(1). The Department shall notify any emission source that must submit early applications at least one year in advance of the date the submittal is due.

(2) Sources subject to rule 335-3-14-.06 or subject to preconstruction review under Title I of the Act must apply for a permit under this chapter within 12 months after commencing operation, except, when an existing permit issued under this chapter prohibits construction or a change in operation, a permit revision must be obtained before commencing operation.

(3) Renewal. An application for renewal shall be submitted at least six (6

months before the date of permit expiration, unless a longer period (not to exceed 18 months) is specified in the permit.

(4) Applications for initial phase II acid rain permits shall be submitted by January 1, 1996 for sulfur dioxide (SO_2) and by January 1, 1998 for nitrogen oxides (NOx).

(5) Complete application. Unless the Department notifies the permit applicant in writing that the application is not complete, the application is considered complete 60 days after receipt by the Department. If, while processing the application, the Department determines that more information is needed to evaluate the application, the applicant must submit such information within 30 days or for such other reasonable time as set by a written request(s) by the Department.

(6) A source may operate without a permit under this chapter between the date the application has been deemed complete and the date the final permit is issued, provided that the applicant submits any requested additional material by the deadline(s) specified by the Department.

(7) Duty to supplement or correct an application. A source must submit additional information to the Department to supplement or correct an application promptly after becoming aware of the need for additional or corrected information. Also, a source must supply to the Department additional information concerning any new requirements which have become applicable after a complete application has been filed but before a draft permit is released.

(8) Standard application form and required information. The following information shall be included in an application by a source for a permit under this chapter:

(a) Identifying information, including company name and address (or plant name and address if different from the company name), owner's name and agent, and telephone number and names of plant site manager/contact;

(b) A description of the source's processes and products (by four-digit Standard Industrial Classification Code), including any processes and products associated with each alternate scenario that is identified by the source and a list of insignificant sources and the basis for the determination(s);

(c) The following emissions-related information:

1. A list of all emissions of pollutants for which the source is considered to be major and a list of all emissions of regulated air pollutants. The permit application shall describe all emissions of regulated air pollutants emitted from any emissions unit, except where such units are exempted under this rule. The source shall submit additional information related to the emissions of air pollutants sufficient to verify which requirements are applicable to the source, and other information necessary to determine the amount of any permit fees owed under the fee schedule approved pursuant to rule 335-1-7-.04 of the ADEM Administrative Code;

2. Identification and description of all points of emissions described in subparagraph (c)1. of this paragraph in sufficient detail to establish the basis for fees and the applicability of the requirements of this chapter;

3. Emissions rates of all pollutants in tons per year (tpy) and in such terms as are necessary to establish compliance consistent with the applicable standard reference test method, or alternative method approved by the Department's Director;

4. The following information to the extent it is needed to determine or regulate emissions: fuels to be used, rate of fuel use, raw materials that will be used in the production process, production rates, and operating schedules;

5. Identification and description of all air pollution control equipment and compliance monitoring devices or activities that will be used by the source;

6. Limitations that will be placed on the source's operation so as to affect emissions or any work practice standards that will be implemented, where applicable, for all regulated pollutants.

7. Other information that may be required to address other applicable requirements (including, but not limited to, information relating to stack height limitations developed pursuant to Section 123 of the Act).

8. Calculations on which the information in subparagraphs 1. through 7. above are based.

9. Trivial and insignificant activities.

(i) Insignificant activities shall not necessarily be listed in permits issued pursuant to the provisions of this chapter, provided they are listed in the permit application, and they are not expected to violate any generally applicable requirements listed in the permit.

(ii) Trivial activities shall not be subject to the provisions of this chapter.

(d) The following air pollution control requirements:

1. Citations and descriptions of all applicable statutory and administrative code requirements, and

2. A description of or reference to any applicable test methods for determining compliance with each applicable statutory or administrative code requirement.

(e) Other information that may be required by the Department to enforce and implement other requirements of this chapter;

(f) An explanation of all proposed exemptions from otherwise applicable requirements;

(g) Additional information determined by the Department to be necessary to define alternative operating scenarios that are identified by the source pursuant to rule 335-3-16-.05(l), or to define permit terms or conditions implementing rule 335-3-16-.05(m) or rule 335-3-16-.14.

(h) A compliance plan for the source that contains the following:

1. A description of the compliance status of the source with respect to all applicable requirements and a compliance schedule.

2. A statement that the source will continue to comply with all regulatory requirements that it is now in compliance with;

3. A statement that the source will, on a timely basis, meet such requirements that will become effective during the permit term unless a more detailed schedule is expressly required by the applicable requirement;

4. A narrative description of how the source will achieve compliance with requirements for which the source is not in compliance at the time of permit issuance with a compliance schedule for the source. Any schedule shall include a schedule of remedial measures, including an enforceable sequence of actions with milestones, leading to compliance with any applicable requirements for which the source will be in noncompliance at the time of permit issuance. The compliance schedule shall be at least as stringent as any compliance schedule that is contained in any judicial consent decree or administrative order to which the source is subject. Any schedule of compliance shall be supplemental to, and shall not sanction non-compliance with, the applicable requirements on which it is based.

5. A schedule for submission of certified progress reports no less frequently than every 6 months for sources required to have a schedule of compliance to remedy a violation.

6. The compliance plan content requirements specified in this paragraph shall apply and be included in the acid rain portion of a compliance plan for an affected source, except as specifically superseded by regulations promulgated under Title IV of the Act with regard to the schedule and method(s) the source will use to achieve compliance with the acid rain emissions limitations.

(i) A compliance certification, including the following:

1. A certification of compliance with all applicable requirements by a responsible official consistent with paragraph (9) of this rule and Section 114(a)(3) of the Act, as it relates to the enhanced monitoring requirements;

2. A statement of methods used for determining compliance, including a description of monitoring, record keeping, and reporting requirements and test methods;

3. A schedule for submission of compliance certifications during

the permit term, which shall be submitted annually, or more frequently if required by the underlying applicable requirement or by the Department; and

4. A statement indicating the source's compliance status with any applicable enhanced monitoring and compliance certification requirements of the Act.

(j) The use of nationally-standardized forms for acid rain portions of permit applications and compliance plans as required by regulations promulgated under Title IV of the Act.

(9) Certification of truth, accuracy and completeness.

Any application form, report, or compliance certification submitted pursuant to this Administrative Code shall contain certification by a responsible official of truth, accuracy, and completeness. This certification and any other certification required under this chapter shall state that, based on information and belief formed after reasonable inquiry, the statements and information in the document are true, accurate, and complete.

Author: Richard E. Grusnick; Ronald W. Gore.
Statutory Authority: Code of Alabama 1975, §§22-22A-4, 22-22A-5, 22-22A-6, and 22-22A-8.
History: Effective Date: December 28, 1993.
Amended: November 21, 1996; March 27, 1998; September 7, 2000; March 14, 2002.

335-3-16-.05 Permit Content. All permits required under this chapter shall include certain standard permit requirements. The permits shall contain the following:

(a) Applicable emissions limitations and standards and operational requirements and limitations necessary to assure compliance with all applicable requirements at the time of permit issuance. In addition, the permit shall include:

1. A statement or reference to the origin and authority for each term or condition in the permit and any difference in form as compared to the applicable requirement under this chapter upon which the term or condition is based; and

2. A statement to the effect that where an applicable requirement of this chapter is more stringent than an applicable requirement of regulations promulgated under Title IV of the Act, both provisions shall be incorporated into the permit and shall be enforceable by the Department.

(b) Duration of Operating Permits.

1. The Department shall issue permits for a fixed period of five years, except as provided in subparagraph (b)2. below.

2. Solid waste incineration units combusting municipal waste subject to standards under Section 129(e) of the Act shall have a fixed term not to exceed 12 years. However, said permits shall be reviewed every five years.

3. Permits which are issued for new emission units before the units become operational shall be effective for five years after operation of the unit commences.

(c) Monitoring and record keeping requirements.

1. Permits shall contain the following requirements with respect to monitoring:

(i) All emissions monitoring and analysis procedures or test methods required under the applicable requirements, including any procedures and methods promulgated pursuant to Sections 114(a)(3) or 504(b) of the Act;

(ii) Where the applicable requirement does not require periodic testing or instrumental or non-instrumental monitoring (e.g. record keeping designed to serve as monitoring), periodic monitoring sufficient to yield reliable data from the relevant time period that is representative of the source's compliance with the permit, as reported pursuant to subparagraph (c) of this paragraph. Such monitoring requirements shall assure use of terms, test methods, units, averaging periods, and other statistical conventions consistent with the applicable requirement. In certain instances record keeping provisions may be sufficient to meet the requirements of this paragraph; and

(iii) As necessary, information concerning the use, maintenance, and, where appropriate, installation of monitoring equipment or methods.

2. With respect to record keeping, the permit shall incorporate all requirements of this chapter and require, where appropriate, the following:

(i) Records of required monitoring information of the source that include the following:

(I) The date, place as defined in the permit, and time of all sampling or measurements;

(II) The date(s) analyses were performed;

(III) The company or entity that performed the analyses;

(IV) The analytical techniques or methods used;

(V) The results of all analyses; and

(VI) The operating conditions that existed at the time of sampling or measurement;

(ii) Retention of records of all required monitoring data and support

information of the source for a period of at least 5 years from the date of the monitoring sample, measurement, report, or application. Support information includes all calibration and maintenance records and all original strip-chart recordings for continuous monitoring instrumentation and copies of all reports required by the permit.

3. Permits shall incorporate all reporting requirements of this chapter and require the following:

(i) The source to submit reports to the Department of any required monitoring at least every 6 months. All instances of deviations from permit requirements must be clearly identified in said reports. All required reports must be certified by a responsible official consistent with rule 335-3-16-.04(9).

(ii) The source to report deviations from permit requirements within 2 working days of such deviations, including those attributable to upset conditions as defined in the permit, the probable cause of said deviations, and any corrective actions or preventive measures that were taken.

(d) Permits shall contain statements to the effect that emissions exceeding any allowances that the source lawfully holds under Title IV of the Act or the regulations promulgated thereunder are prohibited. Furthermore, the following shall be applicable:

1. No permit revision shall be required for increases in emissions that are authorized by allowances acquired pursuant to the acid rain program, provided that such increases do not require a permit revision under any other applicable requirement.

2. No limit shall be placed on the number of allowances held by the source. The source may not, however, use allowances as a defense to noncompliance with any other applicable requirement.

3. Any such allowance shall be accounted for according to the procedures established in regulations promulgated pursuant to Title IV of the Act.

(e) Permits shall include a severability clause for the purpose of continuation of a permit in the event a portion(s) of the permit is successfully challenged in a legal forum.

(f) Permits shall contain a provision that states that the source (permittee) must comply with all conditions of this administrative code: Noncompliance with a permit will constitute a violation of the Act and this administrative code and may result in an enforcement action; including but not limited to, permit termination, revocation and reissuance, or modification; or denial of a permit renewal application by the source.

(g) Permits shall contain a provision that states the source (permittee) shall not use as a defense in an enforcement action, that maintaining compliance with conditions of the permit would have required halting or reducing the

permitted activity.

(h) Permits shall contain a provision that states that the permit may be modified, revoked, reopened, and reissued, or terminated for cause. The filing of a request by the source (permittee) for a permit modification, revocation and reissuance, or termination, or of a notification of planned changes or anticipated noncompliance will not stay any permit condition.

(i) Permits shall contain a provision that states that no property rights of any sort, or any exclusive privilege are conveyed through the issuance of the permit.

(j) Permits shall contain a provision that states that the source (permittee) shall furnish to the Department, within 30 days or for such other reasonable time as the Department may set, any information that the Department may request in writing to determine whether cause exists for modifying, revoking and reissuing, or terminating the permit or to determine compliance with the permit. Upon receiving a specific request, the permittee shall also furnish to the Department copies of records required to be kept by the permit.

(k) Permits shall state that no permit revision shall be required, under any approved economic incentives, marketable permits, emissions trading and other similar programs or processes for changes that are provided for in the permit.

(l) The permit shall contain a provision that quantifies the terms and conditions for reasonably anticipated alternative operating scenarios that were identified by the source in its application and are acceptable to the Department. The alternative operating scenarios terms and conditions shall:

1. Require the source, contemporaneously with making a change from one operating scenario to another, to record in a log at the permitted facility a record of the scenario under which it is operating;

2. Ensure that the terms and conditions of each such alternative scenario meet all applicable requirements and the requirements of this chapter.

(m) The permit shall contain terms and conditions, if specifically requested by the applicant, which authorize the trading of emissions increases and decreases in the permitted facility solely for the purposes of complying with a federally enforceable emissions cap that is established in the permit independent of otherwise applicable requirements, to the extent that the applicable requirements provide for trading such increases and decreases without a case-by-case approval of each emissions trade.

1. Such terms and conditions:

(i) Shall include all terms required under rule 335-3-16-.05 and rule 335-3-16-.07 to determine compliance;

(ii) May extend the permit shield described in rule 335-3-16-.10 to all

terms and conditions that allow such increases and decreases in emissions; and

(iii) Must meet all applicable requirements and requirements of this chapter.

2. All requests for emissions trading under this rule shall include proposed replicable procedures and permit terms that ensure the emissions trades are quantifiable and enforceable. Such requests shall also include sufficient proposed monitoring, recordkeeping, and reporting as necessary to ensure compliance with all applicable requirements. The applicant shall provide written notice of requests for emissions trading under this rule to the Department and EPA as least 7 days prior to the anticipated change. This notice shall state when the change would occur and shall describe the changes in emissions that would result and how these increases and decreases in emissions would comply with the terms and conditions of the permit.

Author: Richard E. Grusnick; Ronald W. Gore.
Statutory Authority: Code of Alabama 1975, §§22-22A-4, 22-22A-5, 22-22A-6, and 22-22A-8.
History: Effective Date: December 28, 1993.
Amended: November 21, 1996; September 7, 2000; March 14, 2002.

335-3-16-.06 Federally Enforceable Requirements.

(1) All terms in a permit that are required to be part of a permit pursuant to the Act are federally enforceable by EPA, the Department and citizens in general. However, those provisions of a permit that are not required under the Act are considered to be state permit provisions and consequently, are not federally enforceable by EPA and citizens in general.

(2) Those provisions of a permit that are state provisions shall be separated from the federally enforceable terms. Such state provisions shall be clearly identified in the permit.

Author: Richard E. Grusnick.
Statutory Authority: Code of Alabama 1975, §§22-22A-4, 22-22A-5, 22-22A-6, and 22-22A-8.
History: Effective Date: December 28, 1993.
Amended: September 7, 2000.

335-3-16-.07 Compliance Requirements. Permits shall contain the following elements with respect to compliance:

(a) Compliance certification, testing, monitoring, reporting, and record keeping requirements sufficient to assure compliance with the terms and conditions of the permit. Any document [including reports submitted by the source (permittee)] that is required in a permit shall contain a certification by a responsible official that meets the requirements of rule 335-3-16-.04(9).

(b) Inspection and entry requirements that mandate that, the permittee shall allow the Department or an authorized representative, upon presentation of credentials and other documents that may be required by law, to conduct the following:

1. Enter upon the permittee's premises where a source is located or emissions-related activity is conducted, or where records must be kept pursuant to the conditions of a permit;

2. Review and/or copy, at reasonable times, any records that must be kept pursuant to the conditions of a permit;

3. Inspect at reasonable times any facilities, equipment (including monitoring and air pollution control equipment), practices, or operations regulated or required pursuant to a permit; and

4. Sample or monitor at reasonable times substances or parameters for the purpose of assuring compliance with the permit or other applicable requirements.

(c) A schedule of compliance consistent with rule 335-3-16-.04(8)(h).

(d) Progress reports consistent with an applicable schedule of compliance and rule 335-3-16-.04(8)(h) to be submitted at least semiannually, or at a more frequent period if specified in the applicable requirement or by the Department. Such progress reports shall contain the following:

1. Dates for achieving the activities, milestones, or compliance required in the schedule of compliance, and/or dates when such activities, milestones or compliance were achieved; and

2. An explanation of why any dates in the schedule of compliance were not or will not be met, and any preventive or corrective measures adopted.

(e) Requirements for compliance certification with terms and conditions contained in the permit, including emission limitations, standards, or work practices. Permits shall include each of the following:

1. The frequency of submissions of compliance certifications, which shall be at least annually unless more frequent periods are specified according to the specific rule governing the source or required by the Department.

2. A means for monitoring the compliance of the source with its emissions limitations, standards, and work practices in accordance with rule 335-3-16-.05(c);

3. A requirement that the compliance certification include the following:

(i) The identification of each term or condition of the permit that is the basis of the certification;

(ii) The compliance status;

(iii) Whether compliance has been continuous or intermittent;

(iv) The method(s) used for determining the compliance status of the source, currently and over the reporting period consistent with rule 335-3-16-.05(c); and

(v) Such other facts as the Department may require to determine the compliance status of the source;

4. A requirement that all compliance certifications be submitted to the Administrator as well as to the Department; and

5. Such additional requirements as may be specified pursuant to Sections 114(a)(3) and 504(b) of the Act.

(f) Such other provisions as the Department may require.

Author: Richard E. Grusnick.
Statutory Authority: Code of Alabama 1975, §§22-22A-4, 22-22A-5, 22-22A-6, and 22-22A-8.
History: Effective Date: December 28, 1993.
Amended: November 21, 1996; September 7, 2000.

335-3-16-.08 General Permits.

(1)The Department may issue a general permit to any source category if it concludes that the category is appropriate for permitting on a generic basis after notice and opportunity for public participation provided under rule 335-3-16-.15(4). No general permit may be issued for affected sources under the acid rain program unless otherwise provided in regulations promulgated under Title IV of the Act.

(2)A general permit may be issued for a source category based upon an application from a source within the source category or upon the Department's own initiative. The same procedures for issuance of a general permit are applicable as for any other permit issued under this chapter.

(3)A general permit may be issued for the following purposes:

(a) to establish terms and conditions to implement applicable requirements for a source category;

(b) to establish terms and conditions to implement applicable requirements for specified categories of changes to permitted sources;

(c) to establish terms and conditions for new requirements that apply to sources with existing permits; and

(d) to establish federally-enforceable caps on emissions from sources in a specified category.

(4) The Department may issue a general permit if it finds that:

(a) there are several permittees or permit applicants who have the same or substantially similar operations, emissions, activities, or facilities;

(b) the permittees or permit applicants emit the same types of regulated air pollutants;

(c) the operations, emissions, activities, or facilities are subject to the same or similar standards, limitations, and operating requirements; and

(d) the operations, emissions, activities, or facilities are subject to the same or similar monitoring requirements.

(5) A general permit issued under this rule shall identify criteria by which sources may qualify for the general permit. After a general permit has been issued, any source may submit a request to be covered under the permit.

(a) A request for coverage under a general permit shall identify the source and provide information sufficient to demonstrate that it falls within the source category covered by the general permit, together with any additional information that may be specified in the general permit.

(b) A final action approving a request for coverage under a general permit shall not require repeating the public participation procedures.

(6) A copy of the general permit, together with a list of sources approved for coverage under it, shall be kept on file for public review at the Department's office in Montgomery.

(7) If some, but not all, of a source's operations, activities, and emissions are eligible for coverage under one or more general permits, the source may apply for and receive coverage under the general permits for the operations, activities, and emissions that are so eligible. If the source is required under rule 335-3-16-.04 to obtain a permit addressing the remainder of its operations, activities, and emissions, it may apply for and receive a permit that addresses specifically only those items not covered by general permits. In such a case, the source's permit shall identify all operations, activities, and emissions that are subject to general permits and incorporate those general permits by reference or use this for General Permits instead of paragraphs (1) - (6) above.

(8) If a source that is covered by a general permit is later determined to have not qualified for such general permit, the source shall have been operating without an operating permit.

Author: Richard E. Grusnick.
Statutory Authority: Code of Alabama 1975, §§22-22A-4, 22-22A-5, 22-22A-6, and 22-22A-8.
History: Effective Date: December 28, 1993.
Amended: November 21, 1996.

335-3-16-.09 Temporary Sources.

(1) One permit for sources which move at least once during the term of the permit may be issued authorizing emissions from similar operations by the same source owner or operator at multiple temporary locations. The operation must be temporary and involve at least one change of location during the term of the permit.

(2) No affected source shall be permitted as a temporary source. Permits for temporary sources shall include the following:

(a) Conditions that will assure compliance with all applicable requirements at all authorized locations;

(b) Requirements that the owner or operator notify in writing the permitting authority at least ten days in advance of each change in location; and

(c) Conditions that assure compliance with all other provisions of this rule.

Author: Richard E. Grusnick.
Statutory Authority: Code of Alabama 1975, §§22-22A-4, 22-22A-5, 22-22A-6, and 22-22A-8.
History: Effective Date: December 28, 1993
Amended: November 21, 1996.

335-3-16-.10 Permit Shield.

(1)Except as provided in this rule, the Department may expressly include in an Operating Permit a provision stating that compliance with the conditions of the permit shall be deemed compliance with any applicable requirements as of the date of permit issuance, provided that:

(a)Such applicable requirements are included and are specifically identified in the permit; or

(b)The Department, in acting on the permit application or revision, determines in writing that other requirements specifically identified are not applicable to the source, and the permit includes the determination or a concise summary thereof.

(2)An Operating Permit that does not expressly state that a permit shield exists shall be presumed not to provide such a shield.

(3)Nothing in this rule or in any Operating Permit shall alter or affect the following:

(a) The provisions of Section 303 of the Act (emergency orders), including the authority of the Administrator under that section;

(b) The liability of an owner or operator of a source for any violation of applicable requirements prior to or at the time of permit issuance;

(c) The applicable requirements of the acid rain program, consistent with Section 408(a) of the Act; or

(d) The ability of EPA to obtain information from a source pursuant to Section 114 of the Act.

Author: Richard E. Grusnick.
Statutory Authority: Code of Alabama 1975, §§22-22A-4, 22-22A-5, 22-22A-6, and 22-22A-8.
History: Effective Date: December 28, 1993.
Amended:

335-3-16-.11 Exceptions to Violations of Emissions Limits.

(1) The Director may, in the operating permit, exempt on a case-by-case basis exceedances of emission limits which cannot reasonably be avoided, such as during periods of start-up, shut-down or load change. For emission limits established by federal rules (e.g., NSPS, NESHAP, and MACT), exemptions may be granted only where provisions for such exemptions are contained in the applicable rule or its general provisions.

(2) Emergency provision.

(a) An "emergency" means any situation arising from sudden and reasonably unforeseeable events beyond the control of the source, including acts of God, which situation requires immediate corrective action to restore normal operation, and that causes the source to exceed a technology-based emission limitation under the permit, due to unavoidable increases in emissions attributable to the emergency. An emergency shall not include noncompliance to the extent caused by improperly designed equipment, lack of preventative maintenance, careless or improper operation, or operator error.

(b) Exceedances of emission limits during emergencies (as defined above) at a facility may be exempted from being violations provided that:

1. The permittee can identify the cause(s) of the emergency;

2. At the time of the emergency, the permitted facility was being properly operated;

3. During the period of the emergency the permittee took all reasonable

steps to minimize levels of emissions that exceeded the emission standards, or other requirements in the permit;

4. The permittee submitted notice of the emergency to the permitting authority within two (2) working days of the time when emission limitations were exceeded due to the emergency. Such notice shall include those deviations attributable to upset conditions as defined in the permit, the probable cause of said deviations, and any corrective actions or preventive measures that were taken. Within five (5) working days of the emergency, a written documentation what was reported in the notice of the emergency shall be submitted to the Department; and

5. The permittee immediately documented the emergency exceedance in an "Emergency Log", which shall be maintained for five (5) years in a form suitable for inspection upon request by a representative of the Department.

(c) The Director shall be the determiner of whether an emergency has occurred.

(d) This provision is in addition to any emergency or upset provision contained in any applicable requirement.

(e) An emergency constitutes an affirmative defense.

Author: Richard E. Grusnick.
Statutory Authority: Code of Alabama 1975, §§22-22A-4, 22-22A-5, 22-22A-6, and 22-22A-8.
History: Effective Date: December 28, 1993
Amended: January 13, 2000.

335-3-16-.12 Permit Issuance.

(1) Initial.

(a) All major sources must be issued operating permits within 3 years of the date that EPA approves the Department's program.

(b) At least one-third of the permits for sources subject to this chapter must be issued each of the three years following EPA's approval of the Department's program.

(c) If the Department is granted interim approval, then the provisions of subparagraphs (a) and (b) do not apply.

1. During each year of interim approval, at least 20% of the permits subject to this chapter must be acted upon. Thereafter, at least one-third of the remaining sources subject to this chapter must be acted upon each year.

(d) Any application for a new source must be acted on within 18 months of receiving a complete application.

(2) Renewals.

(a) Applications for permit renewal shall be subject to the same procedural requirements, including those for public participation, and affected State and EPA review, that apply to initial permit issuance under this chapter.

(b) A source's right to operate shall terminate upon the expiration of its permit unless a timely and complete renewal application has been submitted at least six months, but not more than 18 months, before the date of expiration or the Department has taken final action approving the source's application for renewal by the expiration date.

(c) If a timely and complete application for a permit renewal is submitted, but the Department fails to take final action to issue or deny the renewal permit before the end of the term of the previous permit, then the permit shall not expire until the renewal permit has been issued or denied, and any permit shield granted for the permit shall continue in effect during that time.

Author: Richard E. Grusnick.
Statutory Authority: Code of Alabama 1975, §§22-22A-4, 22-22A-5, 22-22A-6, and 22-22A-8.
History: Effective Date: December 28, 1993; November 21, 1996.
Amended:

335-3-16-.13 Permit Modifications or Amendments.

(1) Administrative.

(a) An administrative permit amendment is a permit revision that:

1. Corrects typographical errors;

2. Identifies a change in the name, address, or phone number of any person identified in the permit, or provides a similar minor administrative change at the source;

3. Requires more frequent monitoring or reporting by the permittee;

4. Incorporates a general permit into an Operating Permit.

5. Allows for a change in ownership or operational control of a source where the Department determines that no other change in the permit is necessary, provided that a written agreement containing a specific date for transfer of permit responsibility, coverage, and liability between the current and new permittee has been submitted to the Department;

6. Incorporates into a permit issued under this chapter the requirements from preconstruction review permits authorized under this Administrative Code, provided that the process used meets procedural requirements substantially equivalent to the requirements rules 335-3-16-.12 and 335-3-16-.15 of this

chapter that would be applicable to the change if it were subject to review as a permit modification, and compliance requirements substantially equivalent to those contained in rules 335-3-16-.05 through 335-3-16-.11 of this chapter; or

7. Incorporates any other type of change which the Department has determined, and the Administrator has approved as part of an approved operating permit program to be similar to those in subparagraphs 1 - 5 above.

(b) Administrative permit amendments for purposes of the acid rain portion of the permit shall be governed by regulations promulgated under Title IV of the Act.

(c) An administrative permit amendment may be made by the Department consistent with the following:

1. The Department shall take no more than 60 days from receipt of a request for an administrative permit amendment to take final action on such request, and may incorporate such changes without providing notice to the public or affected States provided that it designates any such permit revisions as having been made pursuant to this paragraph.

2. The Department shall submit a copy of the revised permit to the Administrator.

3. The source may implement the changes addressed in the request for an administrative amendment immediately upon submittal of the request.

(2) Flexibility (i.e., Section 502 (B)10 changes): Modifications which are not modifications under Title I of the Act, that contravene an existing permit condition and do not exceed emissions allowable under the permit can be done without modifying the permit if:

(a) Written notification is given that describes the proposed change, the date of the change, any change in emissions, and any term or condition of the permit which is no longer valid due to the change; and

(b) Notice is given to the Department and EPA at least 7 days before the change is made.

(3) <u>Minor permit modification procedures</u>.

(a) Criteria.

1. Minor permit modification procedures may be used only for those permit modifications that:

(i) Do not violate any applicable requirement;

(ii) Do not involve significant changes to existing monitoring, reporting, or record keeping requirements in the permit;

(iii) Do not require or change a case-by-case determination of an emission limitation or other standard, or a source-specific determination for temporary sources of ambient impacts, or a visibility or increment analysis;

(iv) Do not seek to establish or change a permit term or condition for which there is no corresponding underlying applicable requirement and that the source has assumed to avoid an applicable requirement to which the source would otherwise be subject. Such terms and conditions include:

(I) A federally enforceable emissions cap assumed to avoid classification as a modification under any provision of Title I; and

(II) An alternative emissions limit approved pursuant to regulations promulgated under Section 112(i)(5) of the Act;

(v) Are not modifications under any provision of Title I of the Act; and

(vi) Are not required by rule 335-3-16-.13(4) to be processed as a significant modification.

2. Notwithstanding subparagraph (a) of this paragraph, minor permit modification procedures may be used for permit modifications involving the use of economic incentives, marketable permits, emissions trading, and other similar approaches, to the extent that such minor permit modification procedures are explicitly provided for in an applicable implementation plan or in applicable requirements promulgated by EPA.

(b) Application. An application requesting the use of minor permit modification procedures shall meet the requirements of rule 335-3-16-.04(8) of this chapter relative to the modification and shall include the following:

1. A description of the change, the emissions resulting from the change, and any new applicable requirements that will apply if the change occurs;

2. The source's suggested draft permit;

3. Certification by a responsible official, consistent with rule 335-3-16-.04(9), that the proposed modification meets the criteria for use of minor permit modification procedures and a request that such procedures be used; and

4. Completed forms for the Department to use to notify the Administrator and affected States as required under rule 335-3-16-.15.

(c) EPA and affected State notification. Within 5 working days of receipt of a complete permit modification application, the Department shall notify the Administrator and affected States of the requested permit modification. The Department promptly shall send any notice of refusal to accept any recommendations made by the Administrator or the affected States to the Administrator.

(d) Timetable for issuance. The Department may not issue a final permit modification until after EPA's 45-day review period or until EPA has notified the Department that EPA will not object to issuance of the permit modification, whichever is first. Within 90 days of the Department's receipt of an application under minor permit modification procedures or 15 days after the end of the Administrator's 45-day review period under rule 335-3-16-.15(3), whichever is later, the Department shall:

1. Issue the permit modification as proposed;

2. Deny the permit modification application;

3. Determine that the requested modification does not meet the minor permit modification criteria and should be reviewed under the significant modification procedures; or

4. Revise the draft permit modification and transmit to the Administrator the new proposed permit modification as required by rule 335-3-16-.15(1) of this chapter.

(e) Source's ability to make change.

1. Ten days after the application has been submitted to the Department, the source may make the change for which they applied unless the change qualifies as a significant modification. After the source makes the change allowed by the preceding sentence, and until the Department takes any of the actions specified in subparagraphs (d)1. - 4. above, the source must comply with both the applicable requirements governing the change and the proposed permit terms and conditions. During this time period, the source need not comply with the existing permit terms and conditions it seeks to modify. However, if the source fails to comply with its proposed permit terms and conditions during this time period, the existing permit terms and conditions it seeks to modify may be enforced against it.

2. If the Department notifies the source that the modification does not qualify as a minor modification within 10 days after receiving the application, then the source shall apply for the change as a significant modification.

(f) The permit shield under rule 335-3-16-.10 shall not extend to minor permit modifications.

(4) Significant Modifications. Modifications that are significant modifications under rules 335-3-14-.04 or 335-3-14-.05 or are modifications under the NSPS or NESHAPS regulations must be incorporated in the Operating Permit using the requirements for sources initially applying for an Operating Permit, including those for applications, public participation, review by affected States, and review by EPA, as described in rules 335-3-16-.04 and -.14.

(5) Reopening for cause.

(a) Each issued permit shall include provisions specifying the conditions under which the permit will be reopened prior to the expiration of the permit. A permit shall be reopened and revised under any of the following circumstances:

1. Additional applicable requirements under the Act become applicable to a major source with a remaining permit term of 3 or more years. Such a reopening shall be completed not later than 18 months after promulgation of the applicable requirement. No such reopening is required if the effective date of the requirement is later than the date on which the permit is due to expire.

2. Additional requirements (including excess emissions requirements) become applicable to an affected source under the acid rain program. Upon approval by the Administrator, excess emissions offset plans shall be deemed to be incorporated into the permit.

3. The Department or EPA determines that the permit contains a material mistake or that inaccurate statements were made in establishing the emissions standards or other terms or conditions of the permit.

4. The Administrator or the Department determines that the permit must be revised or revoked to assure compliance with the applicable requirements.

(b) Proceedings to reopen and issue a permit shall follow the same procedures as apply to initial permit issuance and shall affect only those parts of the permit for which cause to reopen exists. Such reopening shall be made as expeditiously as practicable.

(c) Reopenings under subparagraph (a) of this paragraph shall not be initiated before a notice of such intent is provided to the source by the Department at least 30 days in advance of the date that the permit is to be reopened, except that the Department may provide a shorter time period in the case of an emergency.

Author: Richard E. Grusnick; Ronald W. Gore.
Statutory Authority: Code of Alabama 1975, §§22-22A-4, 22-22A-5, 22-22A-6, and 22-22A-8.
History: Effective Date: December 28, 1993.
Amended: November 21, 1996; September 7, 2000.

335-3-16-.14 Off-Permit Changes.

(1) Any change at a source holding an operating permit which is not addressed or prohibited in the federally enforceable terms and conditions of the permit may be designated by the owner or operator as an off-permit change, and may be made without revision to the federally enforceable terms and conditions of the operating permit, provided that the change:

(a) shall meet all applicable requirements

(b) does not violate any federally enforceable permit term or condition;

(c) is not subject to any requirement or standard under Title IV of the Clean Air Act; and

(d) is not a modification under Title I.

(2) Designation of a change as state-only affects only the federal requirements for processing of the change under the federal operating permit program. The owner or operator must comply with all applicable state permitting and preconstruction review requirements. Any change designated as state-only will be treated as a permit revision under state permitting requirements and shall be processed in accordance with the administrative permit amendment provisions in rule 335-3-16-.13(1) or the minor permit modification provisions in rule 335-3-16-.13(3), except that the provisions of rule 335-3-16-.13(3)(d) shall not apply.

(3) The owner or operator of any permitted source who plans to make a change meeting the criteria set forth in this rule may submit a request that the Director process the change application as an off-permit change, in accordance with paragraph (2) of this rule.

(4) Any application pertaining to a change designated by the applicant as an off-permit change shall be submitted by the applicant to EPA in fulfillment of the obligation to provide written notice, provided, that no change meeting the criteria for an insignificant activity or trivial activity is subject to the procedures set forth in this rule.

Author: Richard E. Grusnick.
Statutory Authority: Code of Alabama 1975, §§22-22A-4, 22-22A-5, 22-22A-6, and 22-22A-8.
History: Effective Date: December 28, 1993.
Amended: November 21, 1996.

335-3-16-.15 Permit Review by EPA, Affected States and Public.

(1) Transmission of information to EPA.

(a) The Department shall submit each application, each proposed permit and each final permit to EPA. The Department may require the applicant to submit a copy of its application directly to EPA. The Department also shall submit a copy of the draft permit to the applicant at the same time that EPA is sent a copy.

(b) Upon agreement with EPA, the Department may submit a summary of the application instead of the full application.

(c) The Department shall keep 5 years of records of the information sent to EPA that is required in subparagraph (a) of this paragraph.

(2) Review by affected states.

(a) The Department shall give notice to each affected state of each draft permit on or before public notice, unless public notice is not required.

(b) The Department shall respond in writing its reasons for refusing to accept an affected State's recommendations or for refusing to accept the Administrator's recommendations.

(3) EPA objection.

(a) If EPA objects in writing within 45 days of receipt of a proposed permit or prior to issuance of a final permit, the Department shall not issue the permit, except that the Department may issue a permit that is valid pursuant to Alabama's Air Pollution Control Act only. However, the Department shall advise the source that issuance of such permit shall not provide any protection from federal requirements.

(b) The objection must include the reasons for the objection and a description of the terms that the permit must include to respond to the objections. EPA must supply the applicant with a copy of the objection.

(c) Failure of the Department to do any of the following are also grounds for objection:

1. Comply with paragraphs (1) or (2) of this rule.

2. Submit any information requested by EPA in writing necessary to review the permit.

3. Process the permit under the significant permit modification procedures (unless the modification is minor).

(4) Public participation. Except for modifications qualifying for administrative or minor permit modification procedures, all permit proceedings, including initial permit issuance, significant modifications, and renewals, shall use the following procedures for public notice:

(a) Notice shall be posted on the Department's web site for the duration of the public comment period and also transmitted to a list developed by the Department for persons desiring notice of permit action, including persons who have requested in writing to be on such a list. The notice shall contain a link to the draft permit;

(b) The notice shall identify the affected facility; the name and address of the permittee; the address of the Department; the activity or activities involved in the permit action; the emissions change involved in any permit modification; the name, address, and telephone number of a person (or an email or web site address) from whom interested persons may obtain additional information, including copies of the permit draft, the application, all relevant supporting

materials, including any compliance plan, monitoring and compliance certification report, except for information entitled to be kept confidential, and all other materials available to the Department that are relevant to the permit decision; a brief description of the comment procedures required by this chapter; and the time and place of any hearing that may be held, including a statement of procedures to request a hearing (unless a hearing has already been scheduled);

(c) The Department shall provide at least 30 days for public comment and shall give notice of any public hearing at least 30 days in advance of the hearing; and

(d) The Department shall keep a record of the comments made during the public participation process.

Author: Richard E. Grusnick.
Statutory Authority: Code of Alabama 1975, §§22-22A-4, 22-22A-5, 22-22A-6, and 22-22A-8.
History: Effective Date: December 28, 1993.
Amended: November 21, 1996; June 2, 2017.

ALABAMA DEPARTMENT OF ENVIRONMENTAL MANAGEMENT
AIR DIVISION – AIR POLLUTION CONTROL PROGRAM

CHAPTER 335-3-17
CONFORMITY OF FEDERAL ACTIONS TO STATE IMPLEMENTATION PLANS

TABLE OF CONTENTS

335-3-17-.01 Transportation Conformity
335-3-17-.02 General Conformity

335-3-17-.01 Transportation Conformity.

(1) General. The Environmental Protection Agency Regulations and the Appendices applicable thereto, governing Conformity to State Implementation Plans of Transportation Plans, Programs, and Projects Developed, Funded, or Approved Under Title 23 U.S.C. or the Federal Transit Act address (July 1, 2012) 40 CFR §§ 93.105, 93.122(a)(4)(ii), and 93.125(c) in the Alabama State Implementation Plan as required by the Clean Air Act.

Author: Richard E. Grusnick.
Statutory Authority: Code of Alabama 1975, §§22-28-14, 22-22A-5, 22-22A-6, 22-22A-8, and 41-22-9.
History: Effective Date: April 27, 1995.
Amended: November 21, 1996; March 27, 1998; April 3, 2003; April 3, 2007; January 19, 2009; May 23, 2011; May 28, 2013.

335-3-17-.02 General Conformity.

(1) General. The Environmental Protection Agency Regulations and the Appendices applicable thereto, governing Determining Conformity of General Federal Actions to State Implementation Plans, are incorporated by reference as they exist in 40 CFR 93 Subpart B (July 1, 2010). (The materials incorporated by reference are available for purchase and inspection at the Department's offices.)

Author: Richard E. Grusnick.
Statutory Authority: Code of Alabama 1975, §§22-28-14, 22-22A-5, 22-22A-6, 22-22A-8, and 41-22-9.
History: Effective Date: April 27, 1995.
Amended: November 21, 1996; March 27, 1998; April 3, 2007; May 23, 2011.

ALABAMA DEPARTMENT OF ENVIRONMENTAL MANAGEMENT
AIR DIVISION – AIR POLLUTION CONTROL PROGRAM

CHAPTER 335-3-18
ACID RAIN PROGRAM

TABLE OF CONTENTS

335-3-18-.01 General-Permits Regulation
335-3-18-.02 Nitrogen Oxides Emission Reduction Program

335-3-18-.01 General-Permits Regulation.

(1) The Environmental Protection Agency Regulations, and the Appendices applicable thereto, governing the Acid Rain Program-Permits Regulation (40 CFR, Part 72 and Appendices) are incorporated by reference as they exist in 40 CFR Part 72, (July 1, 2008), except for the provisions found in 40 CFR §72.12 and 40 CFR §§72.70 through 72.74, which are excluded.

(a) The materials incorporated by reference are available for purchase and inspection at the Department's offices at 1400 Coliseum Boulevard, Montgomery, Alabama 36110.

(2) In the event of any inconsistency between the regulations contained in this chapter and regulations contained in other chapters of this administrative code, the provisions of this rule shall take precedence and shall govern the issuance, denial, revision, reopening, and renewal of the Acid Rain provisions of an operating permit.

(3) Definitions. For purposes of this rule, the definitions listed in 40 CFR §72.2, Subpart A, will apply.

Author: Richard E. Grusnick.
Statutory Authority: Code of Alabama 1975, §§22-28-14, 22-22A-5, 22-22A-6, 22-22A-8, and 41-22-9.
History: Effective Date: November 23, 1995; November 21, 1996.
Amended: November 19, 1998; January 13, 2000; September 7, 2000; March 14, 2002; April 3, 2003; April 3, 2007: March 31, 2009.

335-3-18-.02 Nitrogen Oxides Emission Reduction Program.

(1) The Environmental Protection Agency Regulations, and the Appendices applicable thereto, governing the Acid Rain Nitrogen Oxides Emission Reduction Program (40 CFR, Part 76 and Appendices) are incorporated by reference as they exist in 40 CFR Part 76, (July 1, 2006), except for the references to 40 CFR 78 which are excluded

(a) The materials incorporated by reference are available for purchase and inspection at the Department's offices at 1400 Coliseum Boulevard, Montgomery, Alabama 36110.

(2) In the event of any inconsistency between the regulations contained in this chapter and regulations contained in other chapters of this administrative code, the provisions of this rule shall take precedence and shall govern the issuance, denial, revision, reopening, and renewal of the Acid Rain provisions of an operating permit.

(3) Definitions. For purposes of this rule, the definitions listed in 40 CFR §72.2, Subpart A and §76.2, will apply.

Author: Richard E. Grusnick.
Statutory Authority: Code of Alabama 1975, §§22-28-14, 22-22A-5, 22-22A-6, 22-22A-8, and 41-22-9.
History: Effective Date: November 21, 1996.
Amended: November 19, 1998; January 13, 2000; September 7, 2000; April 3, 2007.

ALABAMA DEPARTMENT OF ENVIRONMENTAL MANAGEMENT
AIR DIVISION – AIR POLLUTION CONTROL PROGRAM

CHAPTER 335-3-19
CONTROL OF MUNICIPAL SOLID WASTE LANDFILL GAS EMISSIONS

TABLE OF CONTENTS

335-3-19-.01 RESERVED
335-3-19-.02 RESERVED
335-3-19-.03 RESERVED
335-3-19-.04 RESERVED
335-3-19-.05 RESERVED

335-3-19-.01 RESERVED

335-3-19-.02 RESERVED

335-3-19-.03 RESERVED

335-3-19-.04 RESERVED

335-3-19-.05 RESERVED

APPENDIX A

Class I Counties

January 18, 1972

County	Justification		% Urban Population[1]	Ambient Air Quality[2]
	Urban Population Exceeded 50%	Secondary National Ambient Air Quality Standard Is Exceeded		
Autauga	X		53.6	[3]
Calhoun	X	X	64.1	94
Coffee	X		58.0	[3]
Colbert	X	X	58.1	130
Covington	X		56.6	46
Cullman		X		87
Dale	X		62.3	[3]
Etowah	X	X	72.1	142
Houston	X	X	64.9	76
Jackson		X		127
Jefferson	X	X	68.4	170
Lauderdale	X	X	50.0	114
Lee	X		68.2	[3]
Madison	X	X	78.6	60
Mobile	X	X	82.1	110
Montgomery	X	X	82.8	124
Morgan	X	X	58.7	74
Pike	X	X	56.7	67
Russell	X	X	55.7	70
St. Clair		X		74
Shelby		X		82
Talladega	X	X	53.2	115
Tuscaloosa	X	X	74.0	94
Walker		X		103

[1] % Urban Population As Defined By the U. S. Department of Commerce Census Bureau for 1970.

[2] Air Quality Measured As Micrograms of Suspended Particulates Per Cubic Meter of Ambient Air ($\mu g/m^3$) in 1971. (National Ambient Air Quality Secondary Standard for particulate is 60 $\mu g/m^3$ annual geometric mean).

[3] No Data

APPENDIX B

Sulfur Dioxide Priority Classifications Of Counties
May 29, 1973

Category I Counties[1]:

1. Jackson
2. Jefferson
3. Mobile

Category II Counties[2]:

1. Autauga
2. Baldwin*
3. Barbour
4. Bibb
5. Blount
6. Bullock
7. Butler
8. Calhoun
9. Chambers
10. Cherokee
11. Chilton
12. Choctaw
13. Clarke
14. Clay
15. Cleburne
16. Coffee
17. Colbert*
18. Conecuh
19. Coosa
20. Covington
21. Crenshaw
22. Cullman*
23. Dale
24. Dallas
25. DeKalb*
26. Elmore
27. Escambia*
28. Etowah
29. Fayette
30. Franklin*
31. Geneva
32. Greene
33. Hale
34. Henry
35. Houston
36. Lamar
37. Lauderdale*
38. Lawrence*
39. Lee
40. Limestone*
41. Lowndes
42. Macon
43. Madison*
44. Marengo
45. Marion*
46. Marshall*
47. Monroe
48. Morgan*
49. Montgomery
50. Perry
51. Pickens
52. Pike
53. Randolph
54. Russell
55. St. Clair
56. Shelby
57. Sumter
58. Talladega
59. Tallapoosa
60. Tuscaloosa
61. Walker
62. Washington
63. Wilcox
64. Winston

---

[1] 1.8 lbs. SO_2 per 10^6 BTU

[2] 4.0 lbs. SO_2 per 10^6 BTU

* Reclassified from Category I, September 30, 1975

APPENDIX C

Environmental Protection Agency
Regulations Reference Documents

Cross Referenced to ADEM Rules and

Regulations New Source Performance Standards
National Emission Standards For Hazardous Air Pollutants

The complete text of all finalized EPA regulations incorporated into these regulations is located in the documents listed below. Amendments, revisions, or clarifications of EPA regulations which have been codified in the CFR, as well as of finalized regulations which have not yet been codified, are not included in this listing and interested parties are advised to consult the Federal Register for such amendments or revisions. The exceptions listed below are identified by EPA as nondelegable to the States.

ADEM Chapter 335-3-10	40 CFR Part 60	Exceptions
335-3-10-.02(1) Subpart A	Subpart A	§60.8(b)(2)
		§60.8(b)(3)
		§60.11(e)(7)
		§60.11(e)(8)
		§60.13(g)
		§60.13(i)
		§60.13(j)(2)
335-3-10-.02(2)Subpart D	Subpart D	
335-3-10-.02(2)(a) Subpart Da	Subpart Da	§60.45a
335-3-10-.02(2)(b) Subpart Db	Subpart Db	§60.44b(f)
		§60.44b(g)
		§60.49b(a)(4)
335-3-10-.02(2)(c) Subpart Dc	Subpart Dc	§60.48c(a)(4)
335-3-10-.02(3) Subpart E	Subpart E	
335-3-10-.02(3)(a) Subpart Ea	Subpart Ea	
335-3-10-.02(3)(b) Subpart Eb	Subpart Eb	
335-3-10-.02(3)(c) Subpart Ec	Subpart Ec	§60.50c(i)
335-3-10-.02(4) Subpart F	Subpart F	§60.66

Appendix C

ADEM Chapter 335-3-10	40 CFR Part 60	Exceptions
335-3-10-.02(5) Subpart G	Subpart G	
335-3-10-.02(5)(a) Subpart Ga	Subpart Ga	
335-3-10-.02(6) Subpart H	Subpart H	
335-3-10-.02(7) Subpart I	Subpart I	
335-3-10-.02(8) Subpart J	Subpart J	§60.105(a)(13)(iii) §60.106(i)(12)
335-3-10-.02(8) (a) Subpart Ja	Subpart Ja	§60.109b
335-3-10-.02(9) Subpart K	Subpart K	
335-3-10-.02(9)(a) Subpart Ka	Subpart Ka	§60.114a
335-3-10-.02(9)(b) Subpart Kb	Subpart Kb	§60.111b(f)(4) §60.114(b) §60.116(e)(3)(iii) §60.116(e)(3)(iv) §60.116b(f)(2)(iii)
335-3-10-.02(12) Subpart L	Subpart L	
335-3-10-.02(13) Subpart M	Subpart M	
335-3-10-.02(14) Subpart N	Subpart N	
335-3-10-.02(14)(a) Subpart Na	Subpart Na	
335-3-10-.02(15) Subpart O	Subpart O	§60.153(e)
335-3-10-.02(16) Subpart P	Subpart P	
335-3-10-.02(17) Subpart Q	Subpart Q	
335-3-10-.02(18) Subpart R	Subpart R	
335-3-10-.02(19) Subpart S	Subpart S	
335-3-10-.02(20) Subpart T	Subpart T	
335-3-10-.02(21) Subpart U	Subpart U	
335-3-10-.02(22) Subpart V	Subpart V	
335-3-10-.02(23) Subpart W	Subpart W	
335-3-10-.02(24) Subpart X	Subpart X	
335-3-10-.02(25) Subpart Y	Subpart Y	
335-3-10-.02(26) Subpart Z	Subpart Z	
335-3-10-.02(27) Subpart AA	Subpart AA	

ADEM Chapter 335-3-10	40 CFR Part 60	Exceptions
335-3-10-.02(27)(a) Subpart AAa	Subpart AAa	
335-3-10-.02(28) Subpart BB	Subpart BB	
335-3-10-.02(28) Subpart BBa	Subpart BBa	
335-3-10-.02(29) Subpart CC	Subpart CC	
335-3-10-.02(30) Subpart DD	Subpart DD	
335-3-10-.02(31) Subpart EE	Subpart EE	§60.316(d)
335-3-10-.02(32) Subpart FF	Reserved	
335-3-10-.02(33) Subpart GG	Subpart GG	§60.334(b)(2) §60.335(f)(1)
335-3-10-.02(34) Subpart HH	Subpart HH	
335-3-10-.02(35) Subpart II	Reserved	
335-3-10-.02(36) Subpart JJ	Reserved	
335-3-10-.02(37) Subpart KK	Subpart KK	
335-3-10-.02(38) Subpart LL	Subpart LL	
335-3-10-.02(39) Subpart MM	Subpart MM	
335-3-10-.02(40) Subpart NN	Subpart NN	
335-3-10-.02(41) Subpart OO	Reserved	
335-3-10-.02(42) Subpart PP	Subpart PP	
335-3-10-.02(43) Subpart QQ	Subpart QQ	
335-3-10-.02(44) Subpart RR	Subpart RR	§60.446(c)
335-3-10-.02(45) Subpart SS	Subpart SS	§60.456(d)
335-3-10-.02(46) Subpart TT	Subpart TT	§60.466(d)
335-3-10-.02(47) Subpart UU	Subpart UU	§60.474(g)
335-3-10-.02(48) Subpart VV	Subpart VV	§60.482-1(c)(2) §60.484
335-3-10-.02(48)(a) Subpart VVa	Subpart VVa	
335-3-10-.02(49) Subpart WW	Subpart WW	§60.496(c)
335-3-10-.02(50) Subpart XX	Subpart XX	§60.502(e)(6)
335-3-10-.02(51) Subpart YY	Reserved	
335-3-10-.02(52) Subpart ZZ	Reserved	
335-3-10-.02(53) Subpart AAA	Reserved	

ADEM Chapter 335-3-10	40 CFR Part 60	Exceptions
335-3-10-.02(54) Subpart BBB	Subpart BBB	§60.543(c)(2)(ii)(B)
335-3-10-.02(55) Subpart CCC	Reserved	
335-3-10-.02(56) Subpart DDD	Subpart DDD	§60.562-2(c)
335-3-10-.02(57) Subpart EEE	Reserved	
335-3-10-.02(58) Subpart FFF	Subpart FFF	
335-3-10-.02(59) Subpart GGG	Subpart GGG	
335-3-10-.02(59)(a) Subpart GGGa	Subpart GGGa	
335-3-10-.02(60) Subpart HHH	Subpart HHH	
335-3-10-.02(61) Subpart III	Subpart III	§60.613(e)
335-3-10-.02(62) Subpart JJJ	Subpart JJJ	
335-3-10-.02(63) Subpart KKK	Subpart KKK	
335-3-10-.02(64) Subpart LLL	Subpart LLL	
335-3-10-.02(65) Subpart MMM	Reserved	
335-3-10-.02(66) Subpart NNN	Subpart NNN	§60.663(e)
335-3-10-.02(67) Subpart OOO	Subpart OOO	
335-3-10-.02(68) Subpart PPP	Subpart PPP	
335-3-10-.02(69) Subpart QQQ	Subpart QQQ	
335-3-10-.02(70) Subpart RRR	Subpart RRR	§60.703(e)
335-3-10-.02(71) Subpart SSS	Subpart SSS	§60.711(a)(16)
		§60.713(b)(1)(i)
		§60.713(b)(1)(ii)
		§60.713(b)(5)(i)
		§60.713(d)
		§60.715(a)
		§60.716
335-3-10-.02(72) Subpart TTT	Subpart TTT	§60.723(b)(1)
		§60.723(b)(2)(i)(C)
		§60.723(b)(2)(iv)
		§60.724(e)
		§60.725(b)

ADEM Chapter 335-3-10	40 CFR Part 60	Exceptions
335-3-10-.02(73) Subpart UUU	Subpart UUU	
335-3-10-.02(74) Subpart VVV	Subpart VVV	§60.743(a)(3)(v)(A)
		§60.743(a)(3)(v)(B)
		§60.743(e)
		§60.745(a)
		§60.746
335-3-10-.02(75) Subpart WWW	Subpart WWW	§60.754(a)(5)
335-3-10-.02(76) Subpart XXX	Subpart XXX	§60.764(a)(5)
335-3-10-.02(77) Reserved	Reserved	
335-3-10-.02(78) Reserved	Reserved	
335-3-10-.02(79) Subpart AAAA	Subpart AAAA	
335-3-10-.02(80) Reserved	Reserved	
335-3-10-.02(81) Subpart CCCC	Subpart CCCC	§60.2030
		§60.2115
		§60.2100(b)(2)
335-3-10-.02(82) Reserved	Reserved	
335-3-10-.02(83) Reserved	Reserved	
335-3-10-.02(84) Reserved	Reserved	
335-3-10-.02(85) Reserved	Reserved	
335-3-10-.02(86) Reserved	Reserved	
335-3-10-.02(87) Subpart IIII	Subpart IIII	
335-3-10-.02(88) Subpart JJJJ	Subpart JJJJ	
335-3-10-.02(89) Subpart KKKK	Subpart KKKK	
335-3-10-.02(90) Subpart LLLL	Subpart LLLL	§60.4785(c)
335-3-10-.02(91) Subpart OOOO	Subpart OOOO	
335-3-10-.02(91a) Subpart OOOOa	Subpart OOOOa	
335-3-10-.02 (92) Reserved	Reserved	
335-3-10-.02 (93) Reserved	Reserved	
335-3-10-.02 (94) Reserved	Reserved	
335-3-10-.02 (95) Reserved	Reserved	
335-3-10-.02 (96) TTTT	Subpart TTTT	§60.5575(b)

ADEM Chapter 335-3-10	40 CFR Part 60	Exceptions

History: Effective Date: May 25, 1976.
Amended: June 23, 1981; February 13, 1985; April 15, 1987; June 16, 1988; September 21, 1989; November 1, 1990; March 28, 1991; July 31, 1991; September 19, 1991; October 24, 1991; December 28, 1993; April 27, 1995; November 21, 1996; September 25, 1997; March 27, 1998; July 15, 1999; January 13, 2000; September 7, 2000; March 14, 2002; October 3, 2002; April 3, 2003; October 2, 2003; March 22, 2005; December 12, 2005; July 11, 2006; November 14, 2006; April 3, 2007; January 22, 2008; August 5, 2008; January 19, 2009; March 30, 2010; May 23, 2011; May 29, 2012; January 22, 2013; May 28, 2013; September 24, 2013; November 24, 2015; June 9, 2017.

335-3-10-.03(1) Appendix A Appendix A 335-3-

10-.03(2) Appendix B Appendix B 335-3-10-

.03(3) Appendix F Appendix F

History: Effective Date: June 16, 1988.
Amended: November 1, 1990; March 28, 1991; July 31, 1991; September 19, 1991; October 24, 1991; December 28, 1993; November 21, 1996; March 27, 1998; January 13, 2000; September 7, 2000; March 14, 2002; October 3, 2002; March 22, 2005; November 14, 2006; April 3, 2007; January 22, 2008; January 19, 2009; March 30, 2010, May 23, 2011; May 28, 2013; November 24, 2015; June 9, 2017.

ADEM Chapter 335-3-11	40 CFR Part 61	Exceptions
335-3-11-.02(1) Subpart A	Subpart A	§61.04(b)
		§61.12
		§61.13(h)
		§61.13(i)
		§61.14(d)
		§61.14(g)
335-3-11-.02(2) Subpart C	Subpart C	§61.32(b)
335-3-11-.02(3) Subpart D	Subpart D	

ADEM Chapter 335-3-11	40 CFR Part 61	Exceptions
335-3-11-.02(4) Subpart E	Subpart E	§61.53(c)(4)
		§61.55(d)
335-3-11-.02(5) Subpart F	Subpart F	§61.66
		§61.67(g)
335-3-11-.02(9) Subpart J	Subpart J	§61.112(c)
335-3-11-.02(11) Subpart L	Subpart L	§61.136(d)
335-3-11-.02(12) Subpart M	Subpart M	§61.149(c)(2)
		§61.150(a)(4)
		§61.151(c)
		§61.152(b)(3)
		§61.154(d)
		§61.155(a)
335-3-11-.02(13) Subpart N	Subpart N	§61.162(c)
		§61.163(h)
		§61.164(a)
335-3-11-.02(14) Subpart O	Subpart O	§61.174(a)
335-3-11-.02(15) Subpart P	Subpart P	
335-3-11-.02(21) Subpart V	Subpart V	§61.242-1(c)(2)
		§61.244
335-3-11-.02(22) Reserved	Reserved	
335-3-11-.02(23) Reserved	Reserved	
335-3-11-.02(24) Subpart Y	Subpart Y	§61.273
335-3-11-.02(25) Reserved	Reserved	
335-3-11-.02(26) Reserved	Reserved	
335-3-11-.02(27) Subpart BB	Subpart BB	
335-3-11-.02(28) Reserved	Reserved	
335-3-11-.02(29) Reserved	Reserved	
335-3-11-.02(30) Reserved	Reserved	

ADEM Chapter 335-3-11	40 CFR Part 61	Exceptions
335-3-11-.02(31) Subpart FF	Subpart FF	§61.353

History: Effective Date: May 25, 1976.
Amended: June 23, 1981; February 13, 1985; June 9, 1987; November 1, 1990; March 28, 1991; July 31, 1991; September 19, 1991; October 30, 1992; December 28, 1993; January 13, 2000; March 14, 2002; October 2, 2003; March 22, 2005; December 12, 2005; January 22, 2008: November 24, 2015; June 2, 2017.

335-3-11-.03(1) Appendix B	Appendix B	

History: Effective Date: June 16, 1988
Amended: March 28, 1991; November 21, 1996; March 14, 2002: November 24, 2015; June 9, 2017.

ADEM Chapter 335-3-11	40 CFR Part 63	Exceptions
335-3-11-.06(1) Subpart A	Subpart A	§63.6(g)
		§63.6(h)(9)
		§63.7(e)(2)(ii)
		§63.7(f)
		§63.8(f)
		§63.10(f)
335-3-11-.06(2) Subpart B	Subpart B	
335-3-11-.06(3) Subpart D	Subpart D	
335-3-11-.06(4) Reserved	Reserved	
335-3-11-.06(5) Subpart F	Subpart F[1]	See Footnote
335-3-11-.06(6) Subpart G	Subpart G	§63.153(c)(1)-(4)

[1] The following are not delegable: (1) Approval of alternatives to requirements in §§ 63.100, 63.102, and 63.104. Where these standards reference another subpart, the cited provisions will be delegated according to the delegation provisions of the referenced subpart. (2) Approval of major alternatives to test methods under § 63.7(e)(2)(ii) and (f), as defined in § 63.90, and as required in this subpart. (3) Approval of major alternatives to monitoring under § 63.8(f), as defined in § 63.90, and as required in this subpart. (4) Approval of major alternatives to recordkeeping and reporting under § 63.10(f), as defined in § 63.90, and as required in this subpart.

ADEM Chapter 335-3-11	40 CFR Part 63	Exceptions
335-4-11-.06(7) Subpart H	Subpart H[2]	See Footnote
335-3-11-.06(8) Subpart I	Subpart I[3]	See Footnote
335-3-11-.06(9) Reserved	Reserved	
335-3-11-.06(10) Reserved	Reserved	
335-3-11-.06(11) Subpart L	Subpart L[4]	See Footnote
335-3-11-.06(12) Subpart M	Subpart M[5]	See Footnote

[2] The following are not delegable: (1) Approval of alternatives to the requirements in §§ 63.160, 63.162 through 63.176, 63.178 through 63.179. Follow the applicable procedures of § 63.177 to request an alternative means of emission limitation for batch processes and enclosed-vented process units. Where these standards reference another subpart, the cited provisions will be delegated according to the delegation provisions of the referenced subpart. Where these standards reference another subpart and modify the requirements, the requirements shall be modified as described in this subpart. Delegation of the modified requirements will also occur according to the delegation provisions of the referenced subpart. (2) Approval of major alternatives to test methods under § 63.7(e)(2)(ii) and (f), as defined in § 63.90, and as required in this subpart. (3) Approval of major alternatives to monitoring under § 63.8(f), as defined in § 63.90, and as required in this subpart. (4) Approval of major alternatives to recordkeeping and reporting under § 63.10(f), as defined in § 63.90, and as required in this subpart.

[3] The following are not delegable: (1) Approval of alternatives to the requirements in §§ 63.190 and 63.192(a) through (b), (e), and (h) through (j). Where these standards reference another subpart, the cited provisions will be delegated according to the delegation provisions of the referenced subpart. (2) Approval of major alternatives to test methods under § 63.7(e)(2)(ii) and (f), as defined in § 63.90, and as required in this subpart. (3) Approval of major alternatives to monitoring under § 63.8(f), as defined in § 63.90, and as required in this subpart. (4) Approval of major alternatives to recordkeeping and reporting under § 63.10(f), as defined in § 63.90, and as required in this subpart.

[4] The following are not delegable: (1) Approval of alternatives to the requirements in §§ 63.300 and 63.302 through 63.308 (except the authorities in 63.306(a)(2) and (d)). (2) Approval of major alternatives to test methods under § 63.7(e)(2)(ii) and (f), as defined in §63.90, and as required in this subpart. (3) Approval of any changes to section 2 of Method 303 in appendix A of this part. (4) Approval of major alternatives to monitoring under § 63.8(f), as defined in § 63.90, and as required in this subpart. (5) Approval of major alternatives to recordkeeping and reporting under § 63.10(f), as defined in § 63.90, and as required in this subpart.

[5] The following are not delegable: (1) Approval of alternatives to the requirements in §§ 63.320 and 63.322(a) through (j). Follow the requirements in § 63.325 to

ADEM Chapter 335-3-11	40 CFR Part 63	Exceptions
335-3-11-.06(13) Subpart N	Subpart N	§63.348(c)(1)-(4)
335-3-11-.06(14) Subpart O	Subpart O	§63.368(c)(1)-(4)
335-3-11-.06(15) Reserved	Reserved	
335-3-11-.06(16) Subpart Q	Subpart Q[6]	See Footnote
335-3-11-.06(17) Subpart R	Subpart R[7]	See Footnote
335-3-11-.06(18) Subpart S	Subpart S[8]	See Footnote

---

demonstrate that alternative equipment or procedures are equivalent to the requirements of § 63.322. (2) Approval of major alternatives to test methods under 63.7(e)(2)(ii) and (f), as defined in § 63.90, and as required in this subpart. (3) Approval of major alternatives to monitoring under § 63.8(f), as defined § 63.90, and as required in this subpart. (4) Approval of major alternatives to recordkeeping and reporting under § 63.10(f), as defined in § 63.90, and as required in this subpart.

[6] The following are not delegable: (1) Approval of alternatives to the requirements in §§ 63.400 and 63.402 through 63.403. (2) Approval of major alternatives to test methods under § 63.7(e)(2)(ii) and (f), as defined in § 63.90, and as required in this subpart. (3) Approval of major alternatives to monitoring under § 63.8(f), as defined in § 63.90, and as required in this subpart. (4) Approval of major alternatives to recordkeeping and reporting under § 63.10(f), as defined in § 63.90, and as required in this subpart.

[7] The following are not delegable: (1) Approval of alternatives to the requirements in §§ 63.420, 63.422 through 63.423, and 63.424. Any owner or operator requesting to use an alternative means of emission limitation for storage vessels covered by § 63.423 must follow the procedures in § 63.426. (2) Approval of major alternatives to test methods under § 63.7(e)(2)(ii) and (f), as defined in § 63.90, and as required in this subpart. (3) Approval of major alternatives to monitoring under § 63.8(f), as defined in § 63.90, and as required in this subpart, and any alternatives to § 63.427(a)(1) through (4) per § 63.427(a)(5). (4) Approval of major alternatives to recordkeeping and reporting under § 63.10(f), as defined in § 63.90, and as required in this subpart.

[8] The following are not delegable: (1) Approval of alternatives to the requirements in §§ 63.440, 63.443 through 63.447 and 63.450. Where these standards reference another subpart, the cited provisions will be delegated according to the delegation provisions of the referenced subpart. (2) Approval of alternatives to using §§ 63.457(b)(5)(iii), 63.457(c)(5)(ii) through (iii), and 63.257(c)(5)(ii), and any major alternatives to test methods under § 63.7(e)(2)(ii) and (f), as defined in § 63.90, and as required in this subpart. (3) Approval of alternatives using § 64.453(m) and any major alternatives to monitoring under § 63.8(f), as defined in § 63.90, and as required in this subpart. (4) Approval of major alternatives to

ADEM Chapter 335-3-11	40 CFR Part 63	Exceptions
335-3-11-.06(19) Subpart T	Subpart T[9]	See Footnote
335-3-11-.06(20) Subpart U	Subpart U[10]	See Footnote
335-3-11-.06(21) Reserved	Reserved	
335-3-11-.06(22) Subpart W	Subpart W[11]	See Footnote

recordkeeping and reporting under § 63.10(f), as defined in § 63.90, and as required in this subpart.

[9] The following are not delegable: (1) Approval of alternatives to the requirements in §§ 63.460, 63.462(a) through (d), and 63.463 through 63.464 (except for the authorities in § 63.463(d)(9)). Use the procedures in § 63.469 to request the use of alternative equipment or procedures. (2) Approval of major alternatives to test methods under § 63.7(e)(2)(ii) and (f), as defined in § 63.90, and as required in this subpart. (3) Approval of major alternatives to monitoring under § 63.8(f), as defined in § 63.90, and as required in this subpart. (4) Approval of major alternatives to recordkeeping and reporting under § 63.10(f), as defined in § 63.90, and as required in this subpart.

[10] The following are not delegable: (1) Approval of alternatives to the requirements in §§ 63.480 through 63.481, 63.483(a) through (c), 63.484, 63.485(a) through (k), (m), through (s), (u), 63.486 through 63.487, 63.488(a), (b)(1) through (4), (5)(iv) through (v), (6) through (7), (c) through (i), 63.493 through 63.494, 63.500(a)(1) through (3), (b), 63.501, 63.502(a) through (f), (i), (k) through (m), and 63.503. Where these standards reference another subpart, the cited provisions will be delegated according to the delegation provisions of the referenced subpart. Where these standards reference another subpart and modify the requirements, the requirements shall be modified as described in this subpart. Delegation of the modified requirements will also occur according to the delegation provisions of the referenced subpart. (2) Approval of major alternatives to test methods under § 63.7(e)(2)(ii) and (f), as defined in § 63.90, and as required in this subpart. (3) Approval of major alternatives to monitoring under § 63.8(f), as defined in § 63.90, and as required in this subpart. (4) Approval of major alternatives to recordkeeping and reporting under § 63.10(f), as defined in § 63.90, and as required in this subpart.

[11] The following are not delegable: (1) Approval of alternatives to the requirements in §§ 63.520, 63.521, 63.523, and 63.524. Where these standards reference another rule, the cited provisions in that rule will be delegated according to the delegation provisions of that rule. (2) Approval of major alternatives to test methods for under § 63.7(e)(2)(ii) and (f), as defined in § 63.90, and as required in this subpart. (3) Approval of major alternatives to monitoring under § 63.8(f), as defined in § 63.90, and as required in this subpart. (4) Approval of major alternatives to recordkeeping and reporting under § 63.10(f), as defined in § 63.90, and as required in this subpart.

ADEM Chapter 335-3-11	40 CFR Part 63	Exceptions
335-3-11-.06(23) Subpart X	Subpart X	§63.551(c)(1)-(4)
335-3-11-.06(24) Subpart Y	Subpart Y	§63.568(c)(1)-(4)
335-3-11-.06(25) Reserved	Reserved	
335-3-11-.06(26) Subpart AA	Subpart AA	§63.611(b)(1)-(5)
335-3-11-.06(27) Subpart BB	Subpart BB	§63.632(b)
335-3-11-.06(28) Subpart CC	Subpart CC	§63.656(c)(1)-(4)
335-3-11-.06(29) Subpart DD	Subpart DD[12]	See Footnote
335-3-11-.06(30) Subpart EE	Subpart EE[13]	See Footnote
335-3-11-.06(31) Reserved	Reserved	
335-3-11-.06(32) Subpart GG	Subpart GG	§63.759(c)(1)-(4)
335-3-11-.06(33) Subpart HH	Subpart HH[14]	See Footnote
335-3-11-.06(34) Subpart II	Subpart II[15]	See Footnote

[12] The following are not delegable: (1) Approval of alternatives to the requirements in §§ 63.680, 63.683 through 63.691, and 63.693. Where these standards reference another subpart, the cited provisions will be delegated according to the delegation provisions of the referenced subpart. (2) Approval of major alternatives to test methods under § 63.7(e)(2)(ii) and (f), as defined in § 63.90, and as required in this subpart. (3) Approval of major alternatives to monitoring under § 63.8(f), as defined in § 63.90, and as required in this subpart. (4) Approval of major alternatives to recordkeeping and reporting under § 63.10(f), as defined in § 63.90, and as required in this subpart.

[13] The following are not delegable: (1) Approval of alternatives to the requirements in §§ 63.701 and 63.703. (2) Approval of major alternatives to test methods under § 63.7(e)(2)(ii) and (f), as defined in § 63.90, and as required in this subpart. (3) Approval of major alternatives to monitoring under § 63.8(f), as defined in § 63.90, and as required in this subpart. (4) Approval of major alternatives to recordkeeping and reporting under § 63.10(f), as defined in § 63.90, and as required in this subpart.

[14] The following are not delegable: (1) Approval of alternatives to the requirements in §§ 63.760, 63.764 through 63.766, 63.769, 63.771, and 63.777. (2) Approval of major alternatives to test methods under § 63.7(e)(2)(ii) and (f), as defined in § 63.90, and as required in this subpart. (3) Approval of major alternatives to monitoring under § 63.8(f), as defined in § 63.90, and as required in this subpart. (4) Approval of major alternatives to recordkeeping and reporting under § 63.10(f), as defined in § 63.90, and as required in this subpart.

[15] The following are not delegable: (1) Approval of alternatives to the requirements in §§ 63.780 through 63.781, and 63.783 through 63.784. (2) Approval of major alternatives to test methods under § 63.7(e)(2)(ii) and (f), as defined in § 63.90,

ADEM Chapter 335-3-11	40 CFR Part 63	Exceptions
335-3-11-.06(35) Subpart JJ	Subpart JJ[16]	See Footnote
335-3-11-.06(36) Subpart KK	Subpart KK[17]	See Footnote
335-3-11-.06(37) Reserved	Reserved	
335-3-11-.06(38) Subpart MM	Subpart MM[18]	See Footnote
335-3-11-.06(39) Reserved	Reserved	
335-3-11-.06(40) Subpart OO	Subpart OO[19]	See Footnote

and as required in this subpart. (3) Approval of major alternatives to monitoring under § 63.8(f), as defined in § 63.90, and as required in this subpart. (4) Approval of major alternatives to recordkeeping and reporting under § 63.10(f), as defined in § 63.90, and as required in this subpart.

[16] The following are not delegable: (1) Approval of alternatives to the requirements in §§ 63.800, 63.802, and 63.803(a)(1), (b), (c) introductory text, and (d) through (l). (2) Approval of alternatives to the monitoring and compliance requirements in §§ 63.804(f)(4)(iv)(D) and (E), 63.804(g)(4)(iii)(C), 63.804(g)(4)(vi), and 63.804(g)(6)(vi). (3) Approval of major alternatives to test methods under § 63.7(e)(2)(ii) and (f), as defined in § 63.90, and as required in this subpart, as well as approval of any alternatives to the specific test methods under §§ 63.805(a), 63.805(d)(2)(v), and 63.805(e)(1). (4) Approval of major alternatives to monitoring under § 63.8(f), as defined in § 63.90, and as required in this subpart. (5) Approval of major alternatives to recordkeeping and reporting under § 63.10(f), as defined in § 63.90, and as required in this subpart.

[17] The following are not delegable: (1) Approval of alternatives to the requirements in §§ 63.820 through 63.821 and 63.823 through 63.826. (2) Approval of alternatives to the test method for organic HAP content determination in § 63.827(b) and alternatives to the test method for volatile matter in § 63.827(c), and major alternatives to other test methods under § 63.7(e)((2)(ii) and (f), as defined in § 63.90, and as required in this subpart. (3) Approval of major alternatives to monitoring under § 63.8(f), as defined in § 63.90, and as required in this subpart. (4) Approval of major alternatives to recordkeeping and reporting under § 63.10(f), as defined in defined in § 63.90, and as required in this subpart.

[18] The following are not delegable: (1) Pursuant to §63.6(g), approval of alternatives to standards in §63.862. (2) Pursuant to §63.7(e)(2)(ii) and (f) and as defined in §63.90, approval of major alternatives to test methods. (3) Pursuant to §63.8(f) and as defined in §63.90, approval of major alternatives to monitoring. (4) Pursuant to §63.10(f) and as defined in §63.90, approval of major alternatives to recordkeeping and reporting.

[19] The following are not delegable: (1) Approval of alternatives to the requirements in § 63.900 and 63.902. (2) Approval of major alternatives to test methods under § 63.7(e)(2)(ii) and (f), as defined in § 63.90, and as required in this subpart. (3)

ADEM Chapter 335-3-11	40 CFR Part 63	Exceptions
335-3-11-.06(41) Subpart PP	Subpart PP[20]	See Footnote
335-3-11-.06(42) Subpart QQ	Subpart QQ[21]	See Footnote
335-3-11-.06(43) Subpart RR	Subpart RR[22]	See Footnote
335-3-11-.06(44) Subpart SS	Subpart SS[23]	See Footnote

Approval of major alternatives to monitoring under § 63.8(f), as defined in § 63.90, and as required in this subpart. (4) Approval of major alternatives to recordkeeping and reporting under § 63.10(f), as defined in § 63.90, and as required in this subpart.

[20] The following are not delegable: (1) Approval of alternatives to the requirements in §§ 63.920 and 63.922 through 63.924. Where these standards reference another subpart, the cited provisions will be delegated according to the delegation provisions of the referenced subpart. (2) Approval of major alternatives to test methods under § 63.7(e)(2)(ii) and (f), as defined in § 63.90, and as required in this subpart. (3) Approval of major alternatives to monitoring under § 63.8(f), as defined in § 63.90, and as required in this subpart. (4) Approval of major alternatives to recordkeeping and reporting under § 63.10(f), as defined in § 63.90, and as required in this subpart.

[21] The following are not delegable: (1) Approval of alternatives to the requirements in §§ 63.940, 63.942, and 63.943. Where these standards reference subpart DD, the cited provisions will be delegated according to the delegation provisions of subpart DD. (2) Approval of major alternatives to test methods under § 63.7(e)(2)(ii) and (f), as defined in § 63.90, and as required in this subpart. (3) Approval of major alternatives to monitoring under § 63.8(f), as defined in § 63.90, and as required in this subpart. (4) Approval of major alternatives to recordkeeping and reporting under § 63.10(f), as defined in § 63.90, and as required in this subpart.

[22] The following are not delegable: (1) Approval of alternatives to the requirements in §§ 63.960 and 63.962. Where these standards reference subpart DD, the cited provisions will be delegated according to the delegation provisions subpart DD of this part. (2) Approval of major alternatives to test methods under § 63.7(e)(2)(ii) and (f), as defined in § 63.90, and as required in this subpart. (3) Approval of major alternatives to monitoring under § 63.8(f), as defined in § 63.90, and as required in this subpart. (4) Approval of major alternatives to recordkeeping and reporting under § 63.10(f), as defined in § 63.90, and as required in this subpart.

[23] The following are not delegable: (1) Approval of alternatives to the non-opacity emissions standards in § 63.983(a) and (d), 63.984, 63.985(a), 63.986(a), 63.987 (a), 63.988(a), 63.990(a), 63.993(a), 63.994(a), and 63.995(a) under § 63.6(g). Where these standards reference another subpart, the cited provisions will be delegated according to the delegation provisions of the referenced subpart. (2) Reserved. (3) Approval of major changes to test methods under § 63.7(e)(2)(ii) and

ADEM Chapter 335-3-11	40 CFR Part 63	Exceptions
335-3-11-.06(45) Subpart TT	Subpart TT[24]	See Footnote
335-3-11-.06(46) Subpart UU	Subpart UU[25]	See Footnote
335-3-11-.06(47) Subpart VV	Subpart VV[26]	See Footnote
335-3-11-.06(48) Subpart WW	Subpart WW[27]	See Footnote

(f) and as defined in § 63.90. (4) Approval of major changes to monitoring under § 63.8(f) and as defined in § 63.90. (5) Approval of major changes to recordkeeping and reporting under § 63.10(f) and as defined in § 63.90.

[24] The following are not delegable: (1) Approval of alternatives to the non-opacity emissions standards in § 63.1003 through 63.1015, under § 63.6(g). Where these standards reference another subpart, the cited provisions will be delegated according to the delegation provisions of the referenced subpart. (2) Reserved. (3) Approval of major changes to test methods under § 63.7(e)(2)(ii) and (f) and as defined in § 63.90. (4) Approval of major changes to monitoring under § 63.8(f) and as defined in § 63.90. (5) Approval of major changes to recordkeeping and reporting under § 63.10(f) and as defined in § 63.90.

[25] The following are not delegable: (1) Approval of alternatives to the non-opacity emissions standards in § 63.1022 through 63.1034, under § 63.6(g), and the standards for quality improvement programs in § 63.1035. Where these standards reference another subpart, the cited provisions will be delegated according to the delegation provisions of the referenced subpart. (2) Reserved. (3) Approval of major changes to test methods under § 63.7(e)(2)(ii) and (f) and as defined in § 63.90. (4) Approval of major changes to monitoring under § 63.8(f) and as defined in § 63.90. (5) Approval of major changes to recordkeeping and reporting under § 63.10(f) and as defined in § 63.90.

[26] The following are not delegable: (1) Approval of alternatives to the requirements in §§ 63.1040 and 63.1042 through 63.1045. Where these standards reference subpart DD, the cited provisions will be delegated according to the delegation provisions of subpart DD of this part. (2) Approval of major alternatives to test methods under § 63.7(e)(20(ii) and (f), as defined in § 63.90, and as required in this subpart. (3) Approval of major alternatives to monitoring under § 63.8(f), as defined in § 63.90, and as required in this subpart. (4) Approval of major alternatives to recordkeeping and reporting under § 63.10(f), as defined in § 63.90, and as required in this subpart.

[27] The following are not delegable: (1) Approval of alternatives to the non-opacity emissions standards in §§ 63.1062 and 63.1063(a) and (b) for alternative means of emission limitation, under § 63.6(g). (2) Reserved. (3) Approval of major changes to test methods under § 63.7(e)(2)(ii) and (f) and as defined in § 63.90. (4) Approval of major changes to monitoring under § 63.8(f) and as defined in § 63.90. (5) Approval of major changes to recordkeeping and reporting under § 63.10(f) and as defined in § 63.90.

ADEM Chapter 335-3-11	40 CFR Part 63	Exceptions
335-3-11-.06(49) Subpart XX	Subpart XX[28]	See Footnote
335-3-11-.06(50) Subpart YY	Subpart YY	§63.1114(b)(1)-(5)
335-3-11-.06(51) Reserved	Reserved	
335-3-11-.06(52) Reserved	Reserved	
335-3-11-.06(53) Reserved	Reserved	
335-3-11-.06(54) Subpart CCC	Subpart CCC[29]	See Footnote
335-3-11-.06(55) Subpart DDD	Subpart DDD	§63.1195(c)
335-3-11-.06(56) Subpart EEE	Subpart EEE[30]	See Footnote
335-3-11-.06(57) Reserved	Reserved	
335-3-11-.06(58) Subpart GGG	Subpart GGG	§63.1261(c)(1)-(4)

---

[28] The following are not delegable: (1) Approval of alternatives to the non-opacity emissions standards in §§ 63.1085, 63.1086 and 63.1095 under § 63.6(g). Where these standards reference another subpart, the cited provisions will be delegated provisions of the referenced subpart. (2) Reserved. (3) Approval of major changes to test methods under § 63.7(e)(2)(ii) and (f) and as defined in § 63.90. (4) Approval of major changes to monitoring under § 63.90. (5) Approval of major changes to recordkeeping and reporting under § 63.10(f) and as defined in § 63.90.

[29] The following are not delegable: (1) Approval of alternatives to the requirements in §§ 63.1155, 63.1157 through 63.1159, and 63.1160(a). (2) Approval of major alternatives to test methods under § 63.7(e)(2)(ii) and (f), as defined in § 63.90, and as required in this subpart. (3) Approval of any alternative measurement methods for HCl and CL_2 to those specified in § 63.1161(d)(1). (4) Approval of major alternatives to monitoring under § 63.8(f), as defined in § 63.90, and as required in this subpart. (5) Approval of any alternative monitoring requirements to those specified in §§ 63.1162(a)(2) through (5) and 63.1162(b)(1) through (3). (6) Approval of major alternatives to recordkeeping and reporting under § 63.10(f), as defined in § 63.90, and as required in this subpart. (7) Waiver of recordkeeping requirements specified in § 63.1165. (8) Approval of an alternative schedule for conducting performance tests to the requirement specified in § 63.1162 (a)(1).

[30] The following are not delegable: (1) Approval of alternatives to the requirements in §§ 63.1200, 63.1203 through 63.1205, and 63.1206(a). (2) Approval of major alternatives to test methods under § 63.7(e)(2)(ii) and (f), as defined in § 63.90, and as required in this subpart. (3) Approval of major alternatives to monitoring under § 63.8(f), as defined in § 63.90, and as required in this subpart. (4) Approval of major alternatives to recordkeeping and reporting under § 63.10(f), as defined in § 63.90, and as required in this subpart.

ADEM Chapter 335-3-11	40 CFR Part 63	Exceptions
335-3-11-.06(59) Subpart HHH	Subpart HHH[31]	See Footnote
335-3-11-.06(60) Subpart III	Subpart III	§63.1309(c)(1)-(4)
335-3-11-.06(61) Subpart JJJ	Subpart JJJ	§63.1336(c)(1)-(4)
335-3-11-.06(62) Reserved	Reserved	
335-3-11-.06(63) Subpart LLL	Subpart LLL	§63.1358
335-3-11-.06(64) Subpart MMM	Subpart MMM	§63.1369(c)(1)-(4)
335-3-11-.06(65) Subpart NNN	Subpart NNN	§63.1388(c)
335-3-11-.06(66) Subpart OOO	Subpart OOO	§63.1419(c)(1)-(4)
335-3-11-.06(67) Subpart PPP	Subpart PPP	§63.1421(c)(1)-(4)
335-3-11-.06(68) Reserved	Reserved	
335-3-11-.06(69) Subpart RRR	Subpart RRR	§63.1519(c)(1)-(4)
335-3-11-.06(70) Reserved	Reserved	
335-3-11-.06(71) Reserved	Reserved	
335-3-11-.06(72) Subpart UUU	Subpart UUU	§63.1578(c)(1)-(5)
335-3-11-.06(73) Subpart VVV	Subpart VVV[32]	See Footnote
335-3-11-.06(74) Reserved	Reserved	
335-3-11-.06(75) Subpart XXX	Subpart XXX[33]	See Footnote

[31] The following are not delegable: (1) Approval of alternatives to the requirements in §§ 63.1270, 63.1274 through 63.1275, 63.1281, and 63.1287. (2) Approval of major alternatives to test methods under § 63.7(e)(2)(ii) and (f), as defined in § 63.90, and as required in this subpart. (3) Approval of major alternatives to monitoring under § 63.8(f), as defined in § 63.90, and as required in this subpart. (4) Approval of major alternatives to recordkeeping and reporting under § 63.10(f), as defined in § 63.90, and as required in this subpart.

[32] The following are not delegable: (1) Approval of alternatives to the requirements in §§ 63.1580, 63.1583 through 63.1584, and 63.1586 through 63.1587. (2) Approval of major alternatives to test methods under § 63.7(e)(2)(ii) and (f), as defined in § 63.90, and as required in this subpart. (3) Approval of major alternatives to monitoring under § 63.8(f), as defined in § 63.90, and as required in this subpart. (4) Approval of major alternatives to recordkeeping and reporting under § 63.10(f), as defined in § 63.90, and as required in this subpart.

[33] The following are not delegable: (1) Approval of alternatives to the requirements in §§ 63.1650 and 63.1652 through 63.1654. (2) Approval of major alternatives to test methods under § 63.7(e)(2)(ii) and (f), as defined in § 63.90, and as required in this subpart. (3) Approval of major alternatives to monitoring under § 63.8(f), as defined in § 63.90, and as required in this subpart. (4) Approval of major

ADEM Chapter 335-3-11	40 CFR Part 63	Exceptions
335-3-11-.06(76) Reserved	Reserved	
335-3-11-.06(77) Reserved	Reserved	
335-3-11-.06(78) Subpart AAAA	Subpart AAAA[34]	See Footnote
335-3-11-.06(79) Reserved	Reserved	
335-3-11-.06(80) Subpart CCCC	Subpart CCCC	
335-3-11-.06(81) Subpart DDDD	Subpart DDDD[35]	See Footnote
335-3-11-.06(82) Subpart EEEE	Subpart EEEE[36]	See Footnote
335-3-11-.06(83) Subpart FFFF	Subpart FFFF[37]	See Footnote
335-3-11-.06(84) Subpart GGGG	Subpart GGGG	

alternatives to recordkeeping and reporting under § 63.10(f), as defined in § 63.90, and as required in this subpart.

[34] The following is not delegable: Approval of alternatives to the standards in §63.1955.

[35] The following is not delegable: (1) Approval of alternatives to the compliance options, operating requirements, and work practice requirements in §§ 63.2240 and 63.2241 as specified in § 63.6(g). For the purposes of delegation authority under 40 CFR part 63, subpart E, "compliance options" represent "emission limits"; "operating requirements" represent "operating limits"; and "work practice requirements" represent "work practice standards." (2) Approval of major alternatives to test methods as specified in § 63.7(e)(2)(ii) and (f) and as defined in § 63.90. (3) Approval of major alternatives to monitoring as specified in § 63.8(f) and as defined in § 63.90. (4) Approval of major alternatives to recordkeeping and reporting as specified in § 63.10(f) and as defined in § 63.90. (5) Approval of PCWP sources demonstrations of eligibility for the low-risk subcategory developed according to appendix B of this subpart.

[36] The following are not delegable: (1) Approval of alternatives to the non-opacity emission limitations, operating limits, and work practice standards in § 63.2346(a) through (c) under § 63.6(g). (2) Approval of major changes to test methods under § 63.7(e)(2)(ii) and (f) and as defined in § 63.90. (3) Approval of major changes to monitoring under § 63.8(f) and as defined in § 63.90. (4) Approval of major changes to recordkeeping and reporting under § 63.10(f) and as defined in § 63.90.

[37] The following are not delegable: (1) Approval of alternatives to the non-opacity emission limits and work practice standards in § 63.2450(a) under § 63.6(g). (2) Approval of major alternatives to test methods under § 63.7(e)(2)(ii) and (f) and as defined in § 63.90. (3) Approval of major alternatives to monitoring under § 63.8(f) and as defined in § 63.90. (4) Approval of major alternatives to recordkeeping and reporting under § 63.10(f) and as defined in § 63.90.

ADEM Chapter 335-3-11	40 CFR Part 63	Exceptions
335-3-11-.06(85) Subpart HHHH	Subpart HHHH[38]	See Footnote
335-3-11-.06(86) Subpart IIII	Subpart IIII[39]	See Footnote
335-3-11-.06(87) Subpart JJJJ	Subpart JJJJ[40]	See Footnote
335-3-11-.06(88) Subpart KKKK	Subpart KKKK[41]	See Footnote
335-3-11-.06(89) Reserved	Reserved	
335-3-11-.06(90) Subpart MMMM	Subpart MMMM[42]	See Footnote
335-3-11-.06(91) Subpart NNNN	Subpart NNNN[43]	See Footnote

---

[38] The following are not delegable: (1) The authority under § 63.6(g) to approve alternatives to the emission limits in §63.2983 and operating limits in § 63.2984. (2) The authority under § 63.7(e)(2)(ii) and (f) to approve of major alternatives (as defined in § 63.90) to the test methods in § 63.2993. (3) The authority under § 63.8(f) to approve major alternatives (as defined in § 63.90) to the monitoring requirements in §§ 63.2996 and 63.2997. (4) The authority under § 63.10(f) to approve major alternatives (as defined in § 63.90) to recordkeeping, notification, and reporting requirements in §§ 63.2998 through 63.3000.

[39] The following are not delegable: (1) Approval of alternatives to the work practice standards in § 63.3094 under § 63.6(g). (2) Approval of major alternatives to test methods under § 63.7(e)(2)(ii) and (f) and as defined in § 63.90. (3) Approval of major alternatives to monitoring under § 63.8(f) and as defined in § 63.90. (4) Approval of major alternatives to recordkeeping and reporting under § 63.10(f) and as defined in § 63.90.

[40] The following are not delegable: (1) § 63.3360(c), approval of alternate test method for organic HAP content determination; (2) § 63.3360(d), approval of alternate test method for volatile matter determination.

[41] The following are not delegable: (1) Approval of alternatives to the work practice standards in § 63.3493. (2) Approval of major alternatives to test methods under § 63.7(e)(2)(ii) and (f) and as defined in § 63.90. (3) Approval of major alternatives to monitoring under § 63.8(f) and as defined in § 63.90. (4) Approval of major alternatives to recordkeeping and reporting under § 63.10(f) and as defined in § 63.90.

[42] The following are not delegable: (1) Approval of alternatives to the requirements in § 63.3881 through 3883 and § 63.3890 through 3893. (2) Approval of major alternatives to test methods under § 63.7(e)(2)(ii) and (f) and as defined in § 63.90. (3) Approval of major alternatives to monitoring under § 63.8(f) and as defined in § 63.90. (4) Approval of major alternatives to recordkeeping and reporting under § 63.10(f) and as defined in § 63.90.

ADEM Chapter 335-3-11	40 CFR Part 63	Exceptions
335-3-11-.06(92) Subpart OOOO	Subpart OOOO[44]	See Footnote
335-3-11-.06(93) Subpart PPPP	Subpart PPPP[45]	See Footnote
335-3-11-.06(94) Subpart QQQQ	Subpart QQQQ[46]	See Footnote
335-3-11-.06(95) Subpart RRRR	Subpart RRRR[47]	See Footnote
335-3-11-.06(96) Subpart SSSS	Subpart SSSS[48]	See Footnote

[43] The following are not delegable: (1) Approval of alternatives to the work practice standards in § 63.4093 under § 63.6(g). (2) Approval of major alternatives to test methods under § 63.7(e)(2)(ii) and (f) and as defined in § 63.90. (3) Approval of major alternatives to monitoring under § 63.8(f) and as defined in § 63.90. (4) Approval of major alternatives to recordkeeping and reporting under § 63.10(f) and as defined in § 63.90.

[44] The following are not delegable: (1) Approval of alternatives to the work practice standards in § 63.4293 under § 63.6(g). (2) Approval of major alternatives to test methods under § 63.7(e)(2)(ii) and (f) and as defined in § 63.90. (3) Approval of major alternatives to monitoring under § 63.8(f) and as defined in § 63.90. (4) Approval of major alternatives to recordkeeping and reporting under § 63.10(f) and as defined in § 63.90.

[45] The following are not delegable: (1) Approval of alternatives to the requirements in §§ 63.4481 through 4483 and §§ 63.4490 through 4493. (2) Approval of major alternatives to test methods under § 63.7(e)(2)(ii) and (f) and as defined in § 63.90. (3) Approval of major alternatives to monitoring under § 63.8(f) and as defined in § 63.90. (4) Approval of major alternatives to recordkeeping and reporting under § 63.10(f) and as defined in § 63.90.

[46] The following are not delegable: (1) Approval of alternatives to the work practice standards under § 63.4693. (2) Approval of major alternatives to test methods under § 63.7(e)(2)(ii) and (f) and as defined in § 63.90. (3) Approval of major alternatives to monitoring under § 63.8(f) and as defined in § 63.90. (4) Approval of major changes to recordkeeping and reporting under § 63.10(f) and as defined in § 63.90.

[47] The following are not delegable: (1) Approval of alternatives to the work practice standards in § 63.4893 under § 63.6(g). (2) Approval of major alternatives to test methods under § 63.7(e)(2)(ii) and (f), and as defined in § 63.90. (3) Approval of major alternatives to monitoring under § 63.8(f) and as defined in § 63.90. (4) Approval of major alternatives to recordkeeping and reporting under § 63.10(f) and as defined in § 63.90.

[48] The following are not delegable: (1) Approval of alternatives to the emission limitation in §63.5120. (2) Approval of major alternatives to test methods under § 63.7(e)(2)(ii) and (f) and as defined in §63.5160. (3) Approval of major alternatives to monitoring under § 63.8(f) and as defined in § 63.5150.

ADEM Chapter 335-3-11	40 CFR Part 63	Exceptions
335-3-11-.06(97) Reserved	Reserved	
335-3-11-.06(98) Reserved	Reserved	
335-3-11-.06(99) Subpart VVVV	Subpart VVVV[49]	§63.5698
		§63.5728
		§63.5731(a)
		§63.5734
		§63.5740(a)
		§63.5743
		§63.5746(g)
335-3-11-.06(100) Subpart WWWW	Subpart WWWW[50]	See Footnote
335-3-11-.06(101) Subpart XXXX	Subpart XXXX[51]	See Footnote
335-3-11-.06(102) Subpart YYYY	Subpart YYYY[52]	See Footnote

(4) Approval of major alternatives to recordkeeping and reporting under § 63.10(f) and as defined in §§ 63.5180 and 63.5190.

[49] The following are also not delegable: Pursuant to § 63.7(e)(2)(ii) and (f), the authority to approve alternatives to the test methods in §§ 63.5719(b), 63.5719(c), 63.5725(d)(1), and 63.5758; pursuant to § 63.8(f), the authority to approve major alternatives to the monitoring requirements in § 63.5725; pursuant to § 63.10(f), the authority to approve major alternatives to the reporting and recordkeeping requirements listed in §§ 63.5764, 63.5767, and 63.5770.

[50] The following are not delegable: (1) Approval of alternatives to the organic HAP emissions standards in § 63.5805 under § 63.6(g). (2) Approval of major changes to test methods under § 63.7(e)(2)(ii) and (f) and as defined in § 63.90. (3) Approval of major changes to monitoring under § 63.8(f) and as defined in § 63.90. (4) Approval of major changes to recordkeeping and reporting under § 63.10(f) and as defined in § 63.90.

[51] The following are not delegable: (1) Approval of alternatives to the requirements in §§ 63.5981 through 63.5984, 63.5986, and 63.5988. (2) Approval of major changes to test methods under § 63.7(e)(2)(ii) and (f) and as defined in § 63.90. (3) Approval of major changes to monitoring under § 63.8(f) and as defined in § 63.90. (4) Approval of major changes to recordkeeping and reporting under § 63.10(f) and as defined in § 63.90.

[52] The following are not delegable: (1) Approval of alternatives to the emission limitations or operating limitations in § 63.6100 under § 63.6(g). (2) Approval of major alternatives to test methods under § 63.7(e)(2)(ii) and (f) and as defined in § 63.90. (3) Approval of major alternatives to monitoring under § 63.8(f) and as

ADEM Chapter 335-3-11	40 CFR Part 63	Exceptions
335-3-11-.06(103) Subpart ZZZZ	Subpart ZZZZ	§63.6670(c)(1)-(5)
335-3-11-.06(104) Subpart AAAAA	Subpart AAAAA[53]	See Footnote
335-3-11-.06(105) Subpart BBBBB	Subpart BBBBB[54]	See Footnote
335-3-11-.06(106) Subpart CCCCC	Subpart CCCCC[55]	See Footnote
335-3-11-.06(107) Subpart DDDDD	Subpart DDDDD	§63.7570(b)

---

defined in § 63.90. (4) Approval of major alternatives to recordkeeping and reporting under § 63.10(f) and as defined in § 63.90. (5) Approval of a performance test which was conducted prior to the effective date of the rule to determine outlet formaldehyde concentration as specified in § 63.6110(b).

[53] The following are not delegable: (1) Approval of alternatives to the non-opacity emission limitations in § 63.7090(a). (2) Approval of alternative opacity emission limitations in § 63.7090(a). (3) Approval of alternatives to the operating limits in § 63.7090(b). (4) Approval of major alternatives to test methods under § 63.7(e)(2)(ii) and (f) and as defined in § 63.90. (5) Approval of major alternatives to monitoring under § 63.8(f) and as defined in § 63.90. (6) Approval of major alternatives to recordkeeping and reporting under § 63.10(f) and as defined in § 63.90.

[54] The following are not delegable: (1) Approval of alternatives to the non-opacity emission limitations in § 63.7184 under § 63.6(g). (2) Approval of major alternatives to test methods under § 63.7(e)(2)(ii) and (f) and as defined in § 63.90. (3) Approval of major alternatives to monitoring under § 63.8(f) and as defined in § 63.90. (4) Approval of major alternatives to recordkeeping and reporting under § 63.10(f) and defined in § 63.90.

[55] The following are not delegable: (1) Approval of alternatives to work practice standards for fugitive pushing emissions in § 63.7291(a) for a by-product coke oven battery with vertical flues, fugitive pushing emissions in § 63.7292(a) for a by-product coke oven battery with horizontal flues, fugitive pushing emissions in § 63.7293 for a non-recovery coke oven battery, soaking for a by-product coke oven battery in § 63.7294(a), and quenching for a coke oven battery in § 63.7295(b) under § 63.6(g). (2) Approval of alternatives opacity emission limitations for a by-product coke oven battery under § 63.6(h)(9). (3) Approval of major alternatives to test methods under § 63.7(e)(2)(ii) and (f) and as defined in § 63.90, except for alternative procedures in § 63.7334(a)(7). (4) Approval of major alternatives to monitoring under § 63.8(f) and as defined in § 63.90. (5) Approval of major alternatives to recordkeeping and reporting under § 63.10(f) and as defined in § 63.90. (6) Approval of the work practice plan for by-product coke oven batteries with horizontal flues submitted under § 63.7292(a)(1).

ADEM Chapter 335-3-11	40 CFR Part 63	Exceptions
335-3-11-.06(108) Subpart EEEEE	Subpart EEEEE[56]	See Footnote
335-3-11-.06(109) Subpart FFFFF	Subpart FFFFF[57]	See Footnote
335-3-11-.06(110) Subpart GGGGG	Subpart GGGGG[58]	See Footnote
335-3-11-.06(111) Subpart HHHHH	Subpart HHHHH[59]	See Footnote
335-3-11-.06(112) Subpart IIIII	Subpart IIIII[60]	See Footnote

[56] The following are not delegable: (1) Approval of alternatives to non-opacity emissions limitations in § 63.7690 and work practice standards in § 63.7700 under § 63.6(g). (2) Approval of major alternatives to test methods under § 63.7(e)(2)(ii) and (f) and as defined in § 63.90. (3) Approval of major alternatives to monitoring under § 63.8(f) and as defined in § 63.90. (4) Approval of major alternatives to recordkeeping and reporting under § 63.10(f) and as defined in § 63.90.

[57] The following are not delegable: (1) Approval of alternative opacity emission limits in Table 1 to this subpart under § 63.6(h)(9). (2) Approval of major alternatives to test methods under § 63.7(e)(2)(ii) and (f) and as defined in § 63.90, except for approval of an alternative method for the oil content of the sinter plant feedstock or volatile organic compound measurements for the sinter plant windbox exhaust stream stack as provided in § 63.7824(f). (3) Approval of major alternatives to monitoring under § 63.8(f) and as defined in § 63.90. (4) Approval of major alternatives to recordkeeping and reporting under § 63.10(f) and as defined in § 63.90.

[58] The following are not delegable: (1) Approval of alternatives to the non-opacity emissions limitations and work practice standards in this subpart under § 63.6(g). (2) Approval of major changes to test methods under § 63.7(e)(2)(ii) and (f) and as defined in § 63.90. (3) Approval of major changes to monitoring under § 63.8(f) and as defined in § 63.90. (4) Approval of major changes to recordkeeping and reporting under § 63.10(f) and as defined in § 63.90.

[59] The following are not delegable: (1) Approval of alternatives to the non-opacity emission limits and work practice standards in § 63.8000(a) under § 63.6(g). (2) Approval of major alternatives to test methods under § 63.7(e)(2)(ii) and (f) and as defined in § 63.90. (3) Approval of major alternatives to monitoring under § 63.8(f) and as defined in § 63.90. (4) Approval of major alternatives to recordkeeping and reporting under § 63.10(f) and as defined in § 63.90.

[60] The following are not delegable: (1) Approval of alternatives under § 63.6(g) to the non-opacity emission limitations in § 63.8190 and work practice standards in § 63.8192. (2) Approval of major alternatives to test methods under § 63.7(e)(2)(ii) and (f) and as defined in § 63.90. (3) Approval of major alternatives to monitoring under § 63.8(f) and as defined in § 63.90. (4) Approval of major alternatives to recordkeeping and reporting under § 63.10(f) and as defined in § 63.90.

ADEM Chapter 335-3-11	40 CFR Part 63	Exceptions
335-3-11-.06(113) Subpart JJJJJ	Subpart JJJJJ	§63.8510(c)
335-3-11-.06(114) Subpart KKKKK	Subpart KKKKK	§63.8660(c)
335-3-11-.06(115) Subpart LLLLL	Subpart LLLLL[61]	See Footnote
335-3-11-.06(116) Reserved	Reserved	
335-3-11-.06(117) Subpart NNNNN	Subpart NNNNN[62]	See Footnote
335-3-11-.06(118) Reserved	Reserved	
335-3-11-.06(119) Subpart PPPPP	Subpart PPPPP[63]	See Footnote
335-3-11-.06(120) Subpart QQQQQ	Subpart QQQQQ[64]	See Footnote
335-3-11-.06(121) Subpart RRRRR	Subpart RRRRR[65]	See Footnote

[61] The following are not delegable: (1) Approval of alternatives to the requirements in §§ 63.8681, 63.8682, 63.8683, 63.8684(a) through (c), 63.8686, 63.8687, 63.8688, 63.8689, 63.8690, and 63.8691. (2) Approval of major changes to test methods under § 63.7(e)(2)(ii) and (f) and as defined in § 63.90. (3) Approval of major changes to monitoring under § 63.8(f) and as defined in § 63.90. (4) Approval of major changes to recordkeeping and reporting under § 63.10(f) and as defined in § 63.90.

[62] The following are not delegable: (1) Approval of alternatives to requirements in §§ 63.8980, 63.8985, 63.8990, 63.8995, and 63.9000. (2) Approval of major changes to test methods under § 63.7(e)(2)(ii) and (f) and as defined in § 63.90. (3) Approval of major changes to monitoring under § 63.8(f) and as defined in § 63.90. (4) Approval of major changes to recordkeeping and reporting under § 63.10(f) and as defined in § 63.90.

[63] The following are not delegable: (1) Approval of alternatives to the emission limitations in § 63.9300 under § 63.6(g). (2) Approval of major changes to test methods under § 63.7(e)(2)(ii) and (f) and as defined in § 63.90. (3) Approval of major changes to monitoring under § 63.8(f) and as defined in § 63.90. (4) Approval of major changes to recordkeeping and reporting under § 63.10(f) and as defined in § 63.90.

[64] The following are not delegable: (1) Approval of alternatives to the emission limitations in § 63.9500(a) and (b) under § 63.6(g). (2) Approval of major alternatives to test methods under § 63.7(e)(2)(ii) and (f) and as defined in § 63.90. (3) Approval of major alternatives to monitoring under § 63.8(f) and as defined in § 63.90. (4) Approval of major alternatives to recordkeeping and reporting under § 63.10(f) and as defined in § 63.90.

[65] The following are not delegable: (1) Approval of non-opacity emission limitations and work practice standards under § 63.6(h)(9) and as defined in

ADEM Chapter 335-3-11	40 CFR Part 63	Exceptions
335-3-11-.06(122) Reserved	Reserved	
335-3-11-.06(123) Subpart TTTTT	Subpart TTTTT[66]	See Footnote
335-3-11-.06(124)SubpartUUUUU	Subpart UUUUU	§63.10041(b)(1)-(4)
335-3-11-.06(125) Reserved	Reserved	
335-3-11-.06(126) Reserved	Reserved	
335-3-11-.06(127) Reserved	Reserved	
335-3-11-.06(128) Subpart YYYYY	Subpart YYYYY	§63.10691(c)(1)-(6)
335-3-11-.06(129) Subpart ZZZZZ	Subpart ZZZZZ	§63.10905(c)(1)-(6)
335-3-11-.06(130) Reserved	Reserved	
335-3-11-.06(131) Reserved	Reserved	
335-3-11-.06(132) Reserved	Reserved	
335-3-11-.06(133) Subpart DDDDDD	Subpart DDDDDD	§63.11145(b)
335-3-11-.06(134) Subpart EEEEEE	Subpart EEEEEE[67]	See Footnote

§ 63.90. (2) Approval of major alternatives to test methods under § 63.7(e)(2)(ii) and (f) and as defined in § 63.90. (3) Approval of major alternatives to monitoring under § 63.8(f) and as defined in § 63.90. (4) Approval of major alternatives to recordkeeping and reporting under § 63.10(f) and as defined in § 63.90.

[66] The following are not delegable: (1) Approval of alternatives to the non-opacity emission limitations in § 63.9890 and work practice standards in § 63.9891 under § 63.6(g). (2) Approval of major alternatives to test methods under § 63.7(e)(2)(ii) and (f) and as defined in § 63.90. (3) Approval of major alternatives to monitoring under § 63.8(f) and as defined in § 63.90. (4) Approval of major alternatives to recordkeeping and reporting under § 63.10(f) and as defined in § 63.90.

[67] The following are not delegable: (1) Approval of an alternative non-opacity emissions standard under § 63.6(g). (2) Approval of an alternative opacity emissions standard under § 63.6(h)(9). (3) Approval of a major change to a test method under § 63.7(e)(2)(ii) and (f). A "major change to test method" is defined in § 63.90. (4) Approval of a major change to monitoring under § 63.8(f). A "major change to monitoring" is defined in § 63.90. (5) Approval of a major change to recordkeeping/reporting under § 63.10(f). A "major change to recordkeeping/reporting" is defined in § 63.90.

ADEM Chapter 335-3-11	40 CFR Part 63	Exceptions
335-3-11-.06(135) Subpart FFFFFF	Subpart FFFFFF[68]	See Footnote
335-3-11-.06(136) Subpart GGGGGG	Subpart GGGGGG[69]	See Footnote
335-3-11-.06(137) Reserved	Reserved	
335-3-11-.06(138) Reserved	Reserved	
335-3-11-.06(139) Reserved	Reserved	
335-3-11-.06(140) Reserved	Reserved	
335-3-11-.06(141) Subpart LLLLLL	Subpart LLLLLL	§63.11399(b)(1)-(4)
335-3-11-.06(142) Subpart MMMMMM	Subpart MMMMMM	§63.11406(b)(1)-(4)
335-3-11-.06(143) Reserved	Reserved	
335-3-11-.06(144) Subpart OOOOOO	Subpart OOOOOO	§63.11420(b)(1)-(4)
335-3-11-.06(145) Reserved	Reserved	
335-3-11-.06(146) Subpart QQQQQQ	Subpart QQQQQQ[70]	See Footnote

[68] The following are not delegable: (1) Approval of an alternative non-opacity emissions standard under §63.6(g). (2) Approval of a major change to test methods under § 63.7(e)(2)(ii) and (f). A "major change to test method" is defined in § 63.90. (3) Approval of a major change to monitoring under § 63.8(f). A "major change to monitoring" is defined in § 63.90. (4) Approval of a major change to recordkeeping/reporting under § 63.10(f). A "major change to recordkeeping/reporting" is defined in § 63.90.

[69] For primary zinc production facilities, the following are not delegable: (1) Approval of an alternative non-opacity emissions standard under § 63.6(g). (2) Approval of an alternative opacity emissions standard under § 63.6(h)(9). (3) Approval of a major change to test methods under § 63.7(e)(2)(ii) and (f). A "major change to test method" is defined in § 63.90. (4) Approval of a major change to monitoring under § 63.8(f). A "major change to monitoring" is defined in § 63.90. (5) Approval of a major change to recordkeeping/reporting under § 63.10(f). A "major change to recordkeeping/reporting" is defined in § 63.90. For primary beryllium manufacturing facilities, the following are not delegable: (1) Approval of an alternative non-opacity emissions standard under 40 CFR 61.12(d). (2) Approval of a major change to test methods under 40 CFR 61.13(h). A "major change to test method" is defined in §63.90. (3) Approval of a major change to monitoring under 40 CFR 61.14(g). A "major change to monitoring" is defined in § 63.90. (4) Approval of a major change to recordkeeping/reporting under 40 CFR 61.10. A "major change to recordkeeping/reporting" is defined in § 63.90.

[70] The following are not delegable: (1) Approval of an alternative nonopacity emissions standard under § 63.6(g). (2) Approval of a major change to test methods under § 63.7(e)(2)(ii) and (f). A “major change to test method” is defined

ADEM Chapter 335-3-11	40 CFR Part 63	Exceptions
335-3-11-.06(147) Reserved	Reserved	
335-3-11-.06(148) Reserved	Reserved	
335-3-11-.06(149) Subpart TTTTTT	Subpart TTTTTT	§63.11473(c)(1)-(4)
335-3-11-.06(150) Reserved	Reserved	
335-3-11-.06(151) Subpart VVVVVV	Subpart VVVVVV	§63.11503(b)(1)-(4)
335-3-11-.06(152) Reserved	Reserved	
335-3-11-.06(153) Reserved	Reserved	
335-3-11-.06(154) Subpart YYYYYY	Subpart YYYYYY	§63.11531(c)(1)-(5)
335-3-11-.06(155) Subpart ZZZZZZ	Subpart ZZZZZZ	§63.11557(c)(1)-(5)
335-3-11-.06(156) Subpart AAAAAAA	Subpart AAAAAAA	§63.11567(b)
335-3-11-.06(157) Reserved	Reserved	
335-3-11-.06(158) Subpart CCCCCCC	Subpart CCCCCCC[71]	See Footnote
335-3-11-.06(159) Subpart DDDDDDD		
Subpart DDDDDDD[72]		
See Footnote		
335-3-11-.06(160) Reserved	Reserved	
335-3-11-.06(161) Reserved	Reserved	
335-3-11-.06(162) Reserved	Reserved	
335-3-11-.06(163) Subpart HHHHHHH		
Subpart HHHHHHH		
§63.12000(b)		

in § 63.90 (3) Approval of a major change to monitoring under § 63.8(f). A "major change to monitoring" is defined in § 63.90. (4) Approval of a major change to recordkeeping/reporting under § 63.10(f). A "major change to recordkeeping/reporting" is defined in § 63.90.

[71] The following are not delegable: (1) Approval of an alternative nonopacity emissions standard under § 63.6(g). (2) Approval of a major change to test methods under § 63.7(e)(2)(ii) and (f). A "major change to test method" is defined in § 63.90 (3) Approval of a major change to monitoring under § 63.8(f). A "major change to monitoring" is defined in § 63.90. (4) Approval of a major change to recordkeeping/reporting under § 63.10(f). A "major change to recordkeeping/reporting" is defined in § 63.90.

[72] The following are not delegable: (1) Approval of an alternative nonopacity emissions standard under § 63.6(g). (2) Approval of an alternative opacity emissions standard under § 63.6(h)(9). (3) Approval of a major change to test methods under § 63.7(e)(2)(ii) and (f). A "major change to test method" is defined in § 63.90. (4) Approval of a major change to monitoring under § 63.8(f). A "major change to monitoring" is defined in § 63.90. (5) Approval of a major change to recordkeeping and reporting under § 63.10(f). A "major change to

recordkeeping/reporting" is defined in § 63.90.

ADEM Chapter 335-3-11	40 CFR Part 63	Exceptions

History: Effective Date: November 23, 1995.
Amended: November 21, 1996; September 25, 1997; March 27, 1998; November 19, 1998; July 15, 1999; January 13, 2000; September 7, 2000; March 14, 2002; October 3, 2002; April 3, 2003; October 2, 2003; March 22, 2005; December 12, 2005; July 11, 2006; April 3, 2007; January 22, 2008; August 5, 2008; January 19, 2009; March 30, 2010; May 23, 2011; May 29, 2012; January 22, 2013; May 28, 2013; September 24, 2013; November 24, 2015; June 9, 2017.

335-3-11-.07(1) Appendix A	Appendix A	Sect. 2, Method 303
335-3-11-.07(2) Appendix B	Appendix B	
335-3-11-.07(3) Appendix C	Appendix C	
335-3-11-.07(4) Appendix D	Appendix D	
335-3-11-.07(5) Appendix E	Appendix E	

History: Effective Date: November 23, 1995.
Amended: November 21, 1996; September 25, 1997; November 19, 1998; July 15, 1999; January 13, 2000; March 14, 2002; March 30, 2010; May 23, 2011; May 28, 2013; November 24, 2015; June 9, 2017.

ADEM Chapter 335-3-11A	40 CFR Part 65	Exceptions
335-3-11A-.02(1) Subpart A	Subpart A	§65.8
		§65.46
		§65.102
		§65.156(b)(1)(ii)
		§65.158(a)(2)(ii)
335-3-11A-.02(2) Reserved	Reserved	
335-3-11A-.02(3) Subpart C	Subpart C	
335-3-11A-.02(4) Subpart D	Subpart D	
335-3-11A-.02(5) Subpart E	Subpart E	
335-3-11A-.02(6) Subpart F	Subpart F	
335-3-11A-.02(7) Subpart G	Subpart G	

History: Effective Date: March 14, 2002.
Amended: August 5, 2008; November 24, 2015.

APPENDIX D

Nonattainment Areas

PM_{10}	**(Sub-County Designations)** None
Sulfur Dioxide	**(Sub-County Designations)** None
Ozone (8-hr, Subpart 1)	**(County-Wide Designations)** None
$PM_{2.5}$	**(County-Wide Designations)** None
	(Sub-County Designations) None

APPENDIX E

Attainment Areas - Ozone

County	Federal Register Notice
Autauga	Vol. 47, No. 169, August 31, 1982
Bibb	Vol. 47, No. 169, August 31, 1982
Conecuh	Vol. 47, No. 169, August 31, 1982
DeKalb	Vol. 47, No. 103, May 27, 1982
Elmore	Vol. 47, No. 169, August 31, 1982
Escambia	Vol. 47, No. 169, August 31, 1982
Etowah	Vol. 52, No. 92, May 13, 1987
Fayette	Vol. 46, No. 209, October 29, 1981
Jackson	Vol. 47, No. 103, May 27, 1982
Jefferson	Vol. 69, No. 49, March 12, 2004 (1-hr O_3)
Lamar	Vol. 46, No. 209, October 29, 1981
Limestone	Vol. 46, No. 184, September 23, 1981
Lowndes	Vol. 47, No. 169, August 31, 1982
Madison	Vol. 46, No. 184, September 23, 1981
Marion	Vol. 46, No. 209, October 29, 1981
Marshall	Vol. 46, No. 184, September 23, 1981
Mobile	Vol. 52, No. 92, May 13, 1987
Montgomery	Vol. 47, No. 169, August 31, 1982
Monroe	Vol. 47, No. 169, August 31, 1982
Morgan	Vol. 47, No. 184, September 23, 1981
Shelby	Vol. 69, No. 49, March 12, 2004 (1-hr O_3)
Tuscaloosa	Vol. 47, No. 169, August 31, 1982

NOTE: Ozone nonattainment areas listed in Appendix D. All counties in the State not included in Appendices D and E are designated as **Unclassifiable/Attainment**.

APPENDIX F

U. S. Environmental Protection Agency
Capture Efficiency Procedures

The complete text of the U. S. Environmental Protection Agency's procedures to determine the capture efficiency of a volatile organic compound (VOC) control system of a VOC emissions source is reproduced in this Appendix.

The procedures contained in this Appendix are as follows:

Method 204:	Criteria for and Verification of a Permanent or Temporary Total Enclosure
Method 204A:	Volatile Organic Compounds Content in Liquid Input Stream
Method 204B:	Volatile Organic Compounds Emissions in Captured Stream
Method 204C:	Volatile Organic Compounds Emissions in Captured Stream (Dilution Technique)
Method 204D:	Volatile Organic Compounds Emissions in Fugitive Stream from Temporary Total Enclosure
Method 204E:	Volatile Organic Compounds Emissions in Fugitive Stream from Building Enclosure
Method 204 F:	Volatile Organic Compounds Content in Liquid Input Stream (Distillation Approach)

(This page has been intentionally left blank)

METHOD 204--CRITERIA FOR AND VERIFICATION OF A PERMANENT OR TEMPORARY TOTAL ENCLOSURE

1. SCOPE AND APPLICATION

This procedure is used to determine whether a permanent or temporary enclosure meets the criteria for a total enclosure. An existing building may be used as a temporary or permanent enclosure as long as it meets the appropriate criteria described in this method.

2. SUMMARY OF METHOD

An enclosure is evaluated against a set of criteria. If the criteria are met and if all the exhaust gases from the enclosure are ducted to a control device, then the volatile organic compounds (VOC) capture efficiency (CE) is assumed to be 100 percent, and CE need not be measured. However, if part of the exhaust gas stream is not ducted to a control device, CE must be determined.

3. DEFINITIONS

3.1 **Natural Draft Opening (NDO).** Any permanent opening in the enclosure that remains open during operation of the facility and is not connected to a duct in which a fan is installed.

3.2 **Permanent Total Enclosure (PE)**. A permanently installed enclosure that completely surrounds a source of emissions such that all VOC emissions are captured and contained for discharge to a control device.

3.3 **Temporary Total Enclosure (TTE).** A temporarily installed enclosure that completely surrounds a source of emissions such that all VOC emissions that are not directed through the control device (i.e. uncaptured) are captured and contained for discharge through ducts that allow for the accurate measurement of uncaptured VOC emissions.

3.4 **Building Enclosure (BE).** An existing building that is used as a TTE.

4. SAFETY

An evaluation of the proposed building materials and the design for the enclosure is recommended to minimize any potential hazards.

5. CRITERIA FOR TEMPORARY TOTAL ENCLOSURE

5.1 Any NDO shall be at least four equivalent opening diameters from each VOC emitting point unless otherwise specified by the Administrator.

5.2 Any exhaust point from the enclosure shall be at least four equivalent duct or hood diameters from each NDO.

5.3 The total area of all NDO's shall not exceed 5 percent of the surface area of the enclosure's four walls, floor, and ceiling.

5.4 The average facial velocity (FV) of air through all NDO's shall be at least 3,600 m/hr (200 fpm). The direction of air flow through all NDO's shall be into the enclosure.

5.5 All access doors and windows whose areas are not included in Section 5.3 and are not included in the calculation in Section 5.4 shall be closed during routine operation of the process.

6. CRITERIA FOR A PERMANENT TOTAL ENCLOSURE

6.1 Same as Sections 5.1 and 5.3 through 5.5.

6.2 All VOC emissions must be captured and contained for discharge through a control device.

7. QUALITY CONTROL

7.1 The success of this method lies in designing the TTE to simulate the conditions that exist without the TTE (i.e., the effect of the TTE on the normal flow patterns around the affected facility or the amount of uncaptured VOC emissions should be minimal). The TTE must enclose the application stations, coating reservoirs, and all areas from the application station to the oven. The oven does not have to be enclosed if it is under negative pressure. The NDO's of the temporary enclosure and an exhaust fan must be properly sized and placed.

7.2 Estimate the ventilation rate of the TTE that best simulates the conditions that exist without the TTE (i.e., the effect of the TTE on the normal flow patterns around the affected facility or the amount of uncaptured VOC emissions should be minimal). Figure 204-1 or the following equation may be used as an aid.

$$CE = \frac{Q_G C_G}{Q_G C_G + Q_F C_F} \qquad \textbf{Eq. 204-1}$$

Measure the concentration (C_G) and flow rate (Q_G) of the captured gas stream, specify a safe concentration (C_F) for the uncaptured

gas stream, estimate the CE, and then use the plot in Figure 204-1 or Equation 204-1 to determine the volumetric flow rate of the uncaptured gas stream (Q_F). An exhaust fan that has a variable flow control is desirable.

7.3 Monitor the VOC concentration of the captured gas steam in the duct before the capture device without the TTE. To minimize the effect of temporal variation on the captured emissions, the baseline measurement should be made over as long a time period as practical. However, the process conditions must be the same for the measurement in Section 7.5 as they are for this baseline measurement. This may require short measuring times for this quality control check before and after the construction of the TTE.

7.4 After the TTE is constructed, monitor the VOC concentration inside the TTE. This concentration shall not continue to increase, and must not exceed the safe level according to Occupational Safety and Health Administration requirements for permissible exposure limits. An increase in VOC concentration indicates poor TTE design.

7.5 Monitor the VOC concentration of the captured gas stream in the duct before the capture device with the TTE. To limit the effect of the TTE on the process, the VOC concentration with and without the TTE must be within 10 percent. If the measurements do not agree, adjust the ventilation rate from the TTE until they agree within 10 percent.

8. PROCEDURE

8.1 Determine the equivalent diameters of the NDO's and determine the distances from each VOC emitting point to all NDO's. Determine the equivalent diameter of each exhaust duct or hood and its distance to all NDO's. Calculate the distances in terms of equivalent diameters. The number of equivalent diameters shall be at least four.

8.2 Measure the total surface area (A_T) of the enclosure and the total area (A_N) of all NDO's in the enclosure. Calculate the NDO to enclosure area ratio (NEAR) as follows:

$$NEAR = \frac{A_N}{A_T} \qquad \textbf{Eq. 204-2}$$

The NEAR must be ≤10.05.

8.3 Measure the volumetric flow rate, corrected to standard conditions, of each gas stream exiting the enclosure through an exhaust duct or hood using EPA Method 2. In some cases (e.g.,

when the building is the enclosure), it may be necessary to measure the volumetric flow rate, corrected to standard conditions, of each gas stream entering the enclosure through a forced makeup air duct using Method 2. Calculate FV using the following equation:

$$FV = \frac{Q_O - Q_I}{A_N} \qquad \textbf{Eq. 204-3}$$

where:

Q_O = the sum of the volumetric flow from all gas streams exiting the enclosure through an exhaust duct or hood.

Q_I = the sum of the volumetric flow from all gas streams into the enclosure through a forced makeup air duct; zero, if there is no forced makeup air into the enclosure.

A_N = total area of all NDO's in enclosure.

The FV shall be at least 3,600 m/hr (200 fpm). Alternatively, measure the pressure differential across the enclosure. A pressure drop of 0.013 mm Hg (0.007 in. H_2O) corresponds to an FV of 3,600 m/hr (200 fpm).

8.4 Verify that the direction of air flow through all NDO's is inward. If FV is less than 9,000 m/hr (500 fpm), the continuous inward flow of air shall be verified using streamers, smoke tubes, or tracer gases. Monitor the direction of air flow for at least 1 hour, with checks made no more than 10 minutes apart. If FV is greater than 9,000 m/hr (500 fpm), the direction of air flow through the NDOs shall be presumed to be inward at all times without verification.

9. DIAGRAMS

(See following page)

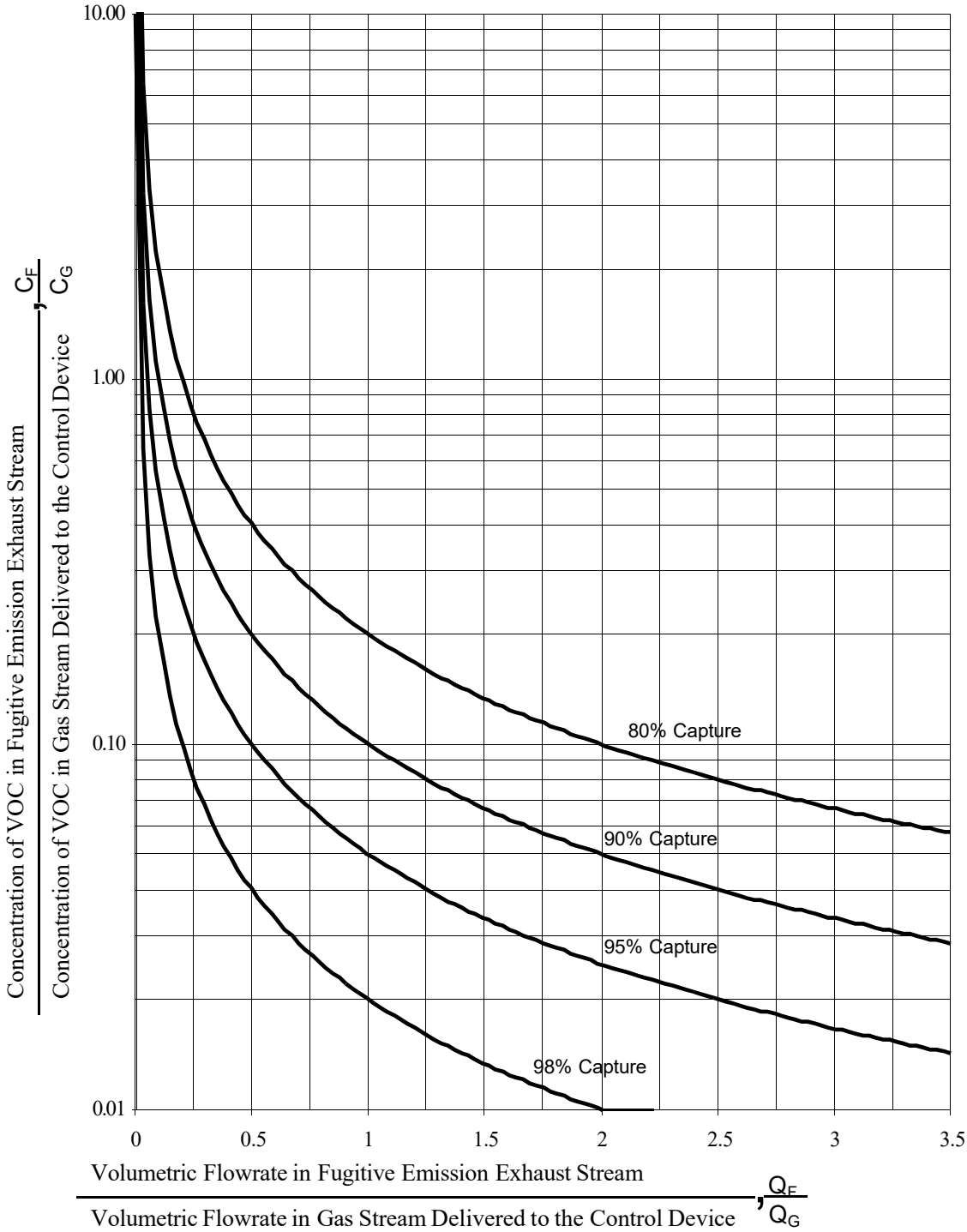

Figure 204-1. The Crumpler Chart.

(This page has been intentionally left blank)

METHOD 204A--VOLATILE ORGANIC COMPOUNDS CONTENT IN LIQUID INPUT STREAM

1. SCOPE AND APPLICATION

1.1 **Applicability.** This procedure is applicable for determining the input of volatile organic compounds (VOC). It is intended to be used in the development of liquid/gas protocols for determining VOC capture efficiency (CE) for surface coating and printing operations.

1.2 **Principle.** The amount of VOC introduced to the process (L) is the sum of the products of the weight (W) of each VOC containing liquid (ink, paint, solvent, etc.) used and its VOC content (V).

1.3 **Sampling Requirements.** A CE test shall consist of at least three sampling runs. Each run shall cover at least one complete production cycle, but shall be at least 3 hours long. The sampling time for each run need not exceed 8 hours, even if the production cycle has not been completed. Alternative sampling times may be used with the approval of the Administrator.

2. SUMMARY OF METHOD

The amount of VOC containing liquid introduced to the process is determined as the weight difference of the feed material before and after each sampling run. The VOC content of the liquid input material is determined by volatilizing a small aliquot of the material and analyzing the volatile material using a flame ionization analyzer (FIA). A sample of each VOC containing liquid is analyzed with a FIA to determine V.

3. SAFETY

Because this procedure is often applied in highly explosive areas, caution and care should be exercised in choosing, installing, and using the appropriate equipment.

4. EQUIPMENT AND SUPPLIES

Mention of trade names or company products does not constitute endorsement. All gas concentrations (percent, ppm) are by volume, unless otherwise noted.

4.1 **Liquid Weight.**

4.1.1 **Balances/Digital Scales.** To weigh drums of VOC containing liquids to within 0.2 lb or 1.0 percent of the total weight of VOC liquid used.

4.1.2 **Volume Measurement Apparatus (Alternative).** Volume meters, flow meters, density measurement equipment, etc., as needed to achieve the same accuracy as direct weight measurements.

4.2 **VOC Content (FIA Technique).** The liquid sample analysis system is shown in Figures 204A-1 and 204A-2. The following equipment is required:

4.2.1 **Sample Collection Can.** An appropriately-sized metal can to be used to collect VOC containing materials. The can must be constructed in such a way that it can be grounded to the coating container.

4.2.2 **Needle Valves.** To control gas flow.

4.2.3 **Regulators.** For carrier gas and calibration gas cylinders.

4.2.4 **Tubing.** Teflon or stainless steel tubing with diameters and lengths determined by connection requirements of equipment. The tubing between the sample oven outlet and the FIA shall be heated to maintain a temperature of 120 ± 5 °C.

4.2.5 **Atmospheric Vent.** A tee and 0- to 0.5-liter/min rotameter placed in the sampling line between the carrier gas cylinder and the VOC sample vessel to release the excess carrier gas. A toggle valve placed between the tee and the rotameter facilitates leak tests of the analysis system.

4.2.6 **Thermometer.** Capable of measuring the temperature of the hot water bath to within 1 °C.

4.2.7 **Sample Oven.** Heated enclosure, containing calibration gas coil heaters, critical orifice, aspirator, and other liquid sample analysis components, capable of maintaining a temperature of 120 ± 5 °C.

4.2.8 **Gas Coil Heaters.** Sufficient lengths of stainless steel or Teflon tubing to allow zero and calibration gases to be heated to the sample oven temperature before entering the critical orifice or aspirator.

4.2.9 **Water Bath.** Capable of heating and maintaining a sample vessel temperature of 100 ± 5 °C.

4.2.10 **Analytical Balance.** To measure ±0.001 g.

4.2.11 **Disposable Syringes.** 2-cc or 5-cc.

4.2.12 **Sample Vessel.** Glass, 40-ml septum vial. A separate vessel is needed for each sample.

4.2.13 **Rubber Stopper.** Two-hole stopper to accommodate 3.2-mm (1/8-in.) Teflon tubing, appropriately sized to fit the opening of the sample vessel. The rubber stopper should be wrapped in Teflon tape to provide a tighter seal and to prevent any reaction of the sample with the rubber stopper. Alternatively, any leak-free closure fabricated of nonreactive materials and accommodating the necessary tubing fittings may be used.

4.2.14 **Critical Orifices.** Calibrated critical orifices capable of providing constant flow rates from 50 to 250 ml/min at known pressure drops. Sapphire orifice assemblies (available from O'Keefe Controls Company) and glass capillary tubing have been found to be adequate for this application.

4.2.15 **Vacuum Gauge.** Zero to 760-mm (0- to 30-in.) Hg U-Tube manometer or vacuum gauge.

4.2.16 **Pressure Gauge.** Bourdon gauge capable of measuring the maximum air pressure at the aspirator inlet (e.g., 100 psig).

4.2.17 **Aspirator.** A device capable of generating sufficient vacuum at the sample vessel to create critical flow through the calibrated orifice when sufficient air pressure is present at the aspirator inlet. The aspirator must also provide sufficient sample pressure to operate the FIA. The sample is also mixed with the dilution gas within the aspirator.

4.2.18 **Soap Bubble Meter.** Of an appropriate size to calibrate the critical orifices in the system.

4.2.19 **Organic Concentration Analyzer.** An FIA with a span value of 1.5 times the expected concentration as propane; however, other span values may be used if it can be demonstrated that they would provide more accurate measurements. The FIA instrument should be the same instrument used in the gaseous analyses adjusted with the same fuel, combustion air, and sample back-pressure (flow rate) settings. The system shall be capable of meeting or exceeding the following specifications:

4.2.19.1 **Zero Drift.** Less than ±3.0 percent of the span value.

4.2.19.2 **Calibration Drift.** Less than ±3.0 percent of the span value.

4.2.19.3 **Calibration Error.** Less than ±5.0 percent of the calibration gas value.

4.2.20 **Integrator/Data Acquisition System.** An analog or digital device or computerized data acquisition system used to integrate the FIA response or compute the average response and record measurement data. The minimum data sampling frequency for computing average or integrated values is one measurement value every 5 seconds. The device shall be capable of recording average values at least once per minute.

4.2.21 **Chart Recorder (Optional).** A chart recorder or similar device is recommended to provide a continuous analog display of the measurement results during the liquid sample analysis.

5. REAGENTS AND STANDARDS

5.1 **Calibration and Other Gases.** Gases used for calibration, fuel, and combustion air (if required) are contained in compressed gas cylinders. All calibration gases shall be traceable to National Institute of Standards and Technology standards and shall be certified by the manufacturer to ±1 percent of the tag value. Additionally, the manufacturer of the cylinder should provide a recommended shelf life for each calibration gas cylinder over which the concentration does not change more than ±2 percent from the certified value. For calibration gas values not generally available, dilution systems calibrated using Method 205 may be used. Alternative methods for preparing calibration gas mixtures may be used with the approval of the Administrator.

5.1.1 **Fuel.** The FIA manufacturer's fuel should be used. A 40 percent H_2/60 percent He or 40 percent H_2/60 percent N_2 gas mixture is recommended to avoid an oxygen synergism effect that reportedly occurs when oxygen concentration varies significantly from a mean value. Other mixtures may be used provided the tester can demonstrate to the Administrator that there is no oxygen synergism effect.

5.1.2 **Carrier Gas.** High purity air with less than 1 ppm of organic material (as propane) or less than 0.1 percent of the span value, whichever is greater.

5.1.3 **FIA Linearity Calibration Gases.** Low-, mid-, and high-range gas mixture standards with nominal propane concentrations of 20-30, 45-55, and 70-80 percent of the span value in air, respectively. Other calibration values and other span values may be used if it can be shown to the Administrator's satisfaction that equally accurate measurements would be achieved.

5.1.4 **System Calibration Gas.** Gas mixture standard containing propane in air, approximating the undiluted VOC concentration expected for the liquid samples.

6. SAMPLE COLLECTION, PRESERVATION AND STORAGE

6.1 Samples must be collected in a manner that prevents or minimizes loss of volatile components and that does not contaminate the coating reservoir.

6.2 Collect a 100-ml or larger sample of the VOC containing liquid mixture at each application location at the beginning and end of each test run. A separate sample should be taken of each VOC containing liquid added to the application mixture during the test run. If a fresh drum is needed during the sampling run, then obtain a sample from the fresh drum.

6.3 When collecting the sample, ground the sample container to the coating drum. Fill the sample container as close to the rim as possible to minimize the amount of headspace.

6.4 After the sample is collected, seal the container so the sample cannot leak out or evaporate.

6.5 Label the container to clearly identify the contents.

7. QUALITY CONTROL

7.1 Required instrument quality control parameters are found in the following sections:

7.1.1 The FIA system must be calibrated as specified in Section 8.1.

7.1.2 The system drift check must be performed as specified in Section 8.2.

7.2 **Audits.**

7.2.1 **Audit Procedure.** Concurrently, analyze the audit sample and a set of compliance samples in the same manner to evaluate the technique of the analyst and the standards

preparation. The same analyst, analytical reagents, and analytical system shall be used both for compliance samples and the EPA audit sample. If this condition is met, auditing of subsequent compliance analyses for the same enforcement agency within 30 days is not required. An audit sample set may not be used to validate different sets of compliance samples under the jurisdiction of different enforcement agencies, unless prior arrangements are made with both enforcement agencies.

7.2.2 **Audit Samples and Audit Sample Availability.** Audit samples will be supplied only to enforcement agencies for compliance tests. The availability of audit samples may be obtained by writing:

Source Test Audit Coordinator (STAC) (MD-77B)
Quality Assurance Division
Atmospheric Research & Exposure Assessment Laboratory
U.S. Environmental Protection Agency
Research Triangle Park, NC 27711

or by calling the STAC at (919) 541-7834. The request for the audit sample must be made at least 30 days prior to the scheduled compliance sample analysis.

7.2.3 **Audit Results.** Calculate the audit sample concentration according to the calculation procedure described in the audit instructions included with the audit sample. Fill in the audit sample concentration and the analyst's name on the audit response form included with the audit instructions. Send one copy to the EPA Regional Office or the appropriate enforcement agency, and a second copy to the STAC. The EPA Regional Office or the appropriate enforcement agency will report the results of the audit to the laboratory being audited. Include this response with the results of the compliance samples in relevant reports to the EPA Regional Office or the appropriate enforcement agency.

8. CALIBRATION AND STANDARDIZATION

8.1 **FIA Calibration and Linearity Check.** Make necessary adjustments to the air and fuel supplies for the FIA and ignite the burner. Allow the FIA to warm up for the period recommended by the manufacturer. Inject a calibration gas into the measurement system and adjust the back-pressure regulator to the value required to achieve the flow rates specified by the manufacturer. Inject the zero- and the high-range calibration gases and adjust the analyzer calibration to provide the proper responses. Inject the low- and mid-range gases and record the responses of the

measurement system. The calibration and linearity of the system are acceptable if the responses for all four gases are within 5 percent of the respective gas values. If the performance of the system is not acceptable, repair or adjust the system and repeat the linearity check. Conduct a calibration and linearity check after assembling the analysis system and after a major change is made to the system.

8.2 **Systems Drift Checks.** After each sample, repeat the system calibration checks in Section 9.2.7 before any adjustments to the FIA or measurement system are made. If the zero or calibration drift exceeds ±3 percent of the span value, discard the result and repeat the analysis.

Alternatively, recalibrate the FIA as in section 8.1 and report the results using both sets of calibration data (i.e., data determined prior to the test period and data determined following the test period). The data that results in the lowest CE value shall be reported as the results for the test run.

8.3 **Critical Orifice Calibration.**

8.3.1 Each critical orifice must be calibrated at the specific operating conditions under which it will be used. Therefore, assemble all components of the liquid sample analysis system as shown in Figure 204A-3. A stopwatch is also required.

8.3.2 Turn on the sample oven, sample line, and water bath heaters, and allow the system to reach the proper operating temperature. Adjust the aspirator to a vacuum of 380 mm (15 in.) Hg vacuum. Measure the time required for one soap bubble to move a known distance and record barometric pressure.

8.3.3 Repeat the calibration procedure at a vacuum of 406 mm (16 in.) Hg and at 25-mm (1-in.) Hg intervals until three consecutive determinations provide the same flow rate. Calculate the critical flow rate for the orifice in ml/min at standard conditions. Record the vacuum necessary to achieve critical flow.

9. PROCEDURE

9.1 **Determination of Liquid Input Weight.**

9.1.1 **Weight Difference.** Determine the amount of material introduced to the process as the weight difference of the feed material before and after each sampling run. In determining the total VOC containing liquid usage, account for:

(a) The initial (beginning) VOC containing liquid mixture.

(b) Any solvent added during the test run.

(c) Any coating added during the test run.

(d) Any residual VOC containing liquid mixture remaining at the end of the sample run.

9.1.1.1 Identify all points where VOC containing liquids are introduced to the process. To obtain an accurate measurement of VOC containing liquids, start with an empty fountain (if applicable). After completing the run, drain the liquid in the fountain back into the liquid drum (if possible) and weigh the drum again. Weigh the VOC containing liquids to ±0.5 percent of the total weight (full) or ±0.1 percent of the total weight of VOC containing liquid used during the sample run, whichever is less. If the residual liquid cannot be returned to the drum, drain the fountain into a preweighed empty drum to determine the final weight of the liquid.

9.1.1.2 If it is not possible to measure a single representative mixture, then weigh the various components separately (e.g., if solvent is added during the sampling run, weigh the solvent before it is added to the mixture). If a fresh drum of VOC containing liquid is needed during the run, then weigh both the empty drum and fresh drum.

9.1.2 Volume Measurement (Alternative). If direct weight measurements are not feasible, the tester may use volume meters and flow rate meters and density measurements to determine the weight of liquids used if it can be demonstrated that the technique produces results equivalent to the direct weight measurements. If a single representative mixture cannot be measured, measure the components separately.

9.2 **Determination of VOC Content in Input Liquids**

9.2.1 Assemble the liquid VOC content analysis system as shown in Figure 204A-1.

9.2.2 Permanently identify all of the critical orifices that may be used. Calibrate each critical orifice under the expected operating conditions (i.e., sample vacuum and temperature) against a volume meter as described in Section 8.3.

9.2.3 Label and tare the sample vessels (including the stoppers and caps) and the syringes.

9.2.4 Install an empty sample vessel and perform a leak test of the system. Close the carrier gas valve and atmospheric vent and evacuate the sample vessel to 250 mm (10 in.) Hg absolute or less using the aspirator. Close the toggle valve at the inlet to the aspirator and

observe the vacuum for at least 1 minute. If there is any change in the sample pressure, release the vacuum, adjust or repair the apparatus as necessary, and repeat the leak test.

9.2.5 Perform the analyzer calibration and linearity checks according to the procedure in Section 5.1. Record the responses to each of the calibration gases and the back-pressure setting of the FIA.

9.2.6 Establish the appropriate dilution ratio by adjusting the aspirator air supply or substituting critical orifices. Operate the aspirator at a vacuum of at least 25 mm (1 in.) Hg greater than the vacuum necessary to achieve critical flow. Select the dilution ratio so that the maximum response of the FIA to the sample does not exceed the high-range calibration gas.

9.2.7 Perform system calibration checks at two levels by introducing compressed gases at the inlet to the sample vessel while the aspirator and dilution devices are operating. Perform these checks using the carrier gas (zero concentration) and the system calibration gas. If the response to the carrier gas exceeds ±0.5 percent of span, clean or repair the apparatus and repeat the check. Adjust the dilution ratio as necessary to achieve the correct response to the upscale check, but do not adjust the analyzer calibration. Record the identification of the orifice, aspirator air supply pressure, FIA back-pressure, and the responses of the FIA to the carrier and system calibration gases.

9.2.8 After completing the above checks, inject the system calibration gas for approximately 10 minutes. Time the exact duration of the gas injection using a stopwatch. Determine the area under the FIA response curve and calculate the system response factor based on the sample gas flow rate, gas concentration, and the duration of the injection as compared to the integrated response using Equations 204A-2 and 204A-3.

9.2.9 Verify that the sample oven and sample line temperatures are 120 ± 5 C and that the water bath temperature is 100 ± 5 C.

9.2.10 Fill a tared syringe with approximately 1 g of the VOC containing liquid and weigh it. Transfer the liquid to a tared sample vessel. Plug the sample vessel to minimize sample loss. Weigh the sample vessel containing the liquid to determine the amount of sample actually received. Also, as a quality control check, weigh the empty syringe to determine the amount of material delivered. The two coating sample weights should agree within 0.02 g. If not, repeat the procedure until an acceptable sample is obtained.

9.2.11 Connect the vessel to the analysis system. Adjust the aspirator supply pressure to the correct value. Open the valve on the carrier gas supply to the sample vessel and adjust it to provide a slight excess flow to the atmospheric vent. As soon as the initial response of the FIA begins to decrease, immerse the sample vessel in the water bath. (Applying heat to the sample vessel too soon may cause the FIA response to exceed the calibrated range of the instrument and, thus, invalidate the analysis.)

9.2.12 Continuously measure and record the response of the FIA until all of the volatile material has been evaporated from the sample and the instrument response has returned to the baseline (i.e., response less than 0.5 percent of the span value). Observe the aspirator supply pressure, FIA back-pressure, atmospheric vent, and other system operating parameters during the run; repeat the analysis procedure if any of these parameters deviate from the values established during the system calibration checks in Section 9.2.7. After each sample, perform the drift check described in Section 8.2. If the drift check results are acceptable, calculate the VOC content of the sample using the equations in Section 11.2. Alternatively, recalibrate the FIA as in section 8.1 and report the results using both sets of calibration data (i.e., data determined prior to the test period and data determined following the test period). The data that results in the lowest CE value shall be reported as the results for the test run. Integrate the area under the FIA response curve, or determine the average concentration response and the duration of sample analysis.

10. DATA ANALYSIS AND CALCULATIONS

10.1 Nomenclature.

$\mathbf{A_L}$ = area under the response curve of the liquid sample, area count.

$\mathbf{A_S}$ = area under the response curve of the calibration gas, area count.

$\mathbf{C_S}$ = actual concentration of system calibration gas, ppm propane.

K = 1.830×10^{-9} g/(ml-ppm).

L = total VOC content of liquid input, kg.

$\mathbf{M_L}$ = mass of liquid sample delivered to the sample vessel, g.

q = flow rate through critical orifice, ml/min.

RF = liquid analysis system response factor, g/area count.

θ_S = total gas injection time for system calibration gas during integrator calibration, min.

V_{Fj} = final VOC fraction of VOC containing liquid j.

V_{Ij} = initial VOC fraction of VOC containing liquid j.

V_{Aj} = VOC fraction of VOC containing liquid j added during the run.

V = VOC fraction of liquid sample.

W_{Fj} = weight of VOC containing liquid j remaining at end of the run, kg.

W_{Ij} = weight of VOC containing liquid j at beginning of the run, kg.

W_{Aj} = weight of VOC containing liquid j added during the run, kg.

10.2 Calculations

10.2.1 Total VOC Content of the Input VOC Containing Liquid.

$$L = \sum_{j=1}^{n} V_{Ij} W_{Ij} - \sum_{j=1}^{n} V_{Fj} W_{Fj} + \sum_{j=1}^{n} V_{Aj} W_{Aj} \qquad \textbf{Eq. 204A-1}$$

10.2.2 Liquid Sample Analysis System Response Factor for Systems Using Integrators, Grams/Area Count.

$$RF = \frac{C_S q \theta_S K}{A_S} \qquad \textbf{Eq. 204A-2}$$

10.2.3 VOC Content of the Liquid Sample.

$$V = \frac{A_L RF}{M_L} \qquad \textbf{Eq. 204A-3}$$

11. METHOD PERFORMANCE

The measurement uncertainties are estimated for each VOC containing liquid as follows: W = ±2.0 percent and V = ±4.0 percent. Based on these numbers, the probable uncertainty for L is estimated at about ±4.5 percent for each VOC containing liquid.

12. DIAGRAMS.

(See following pages)

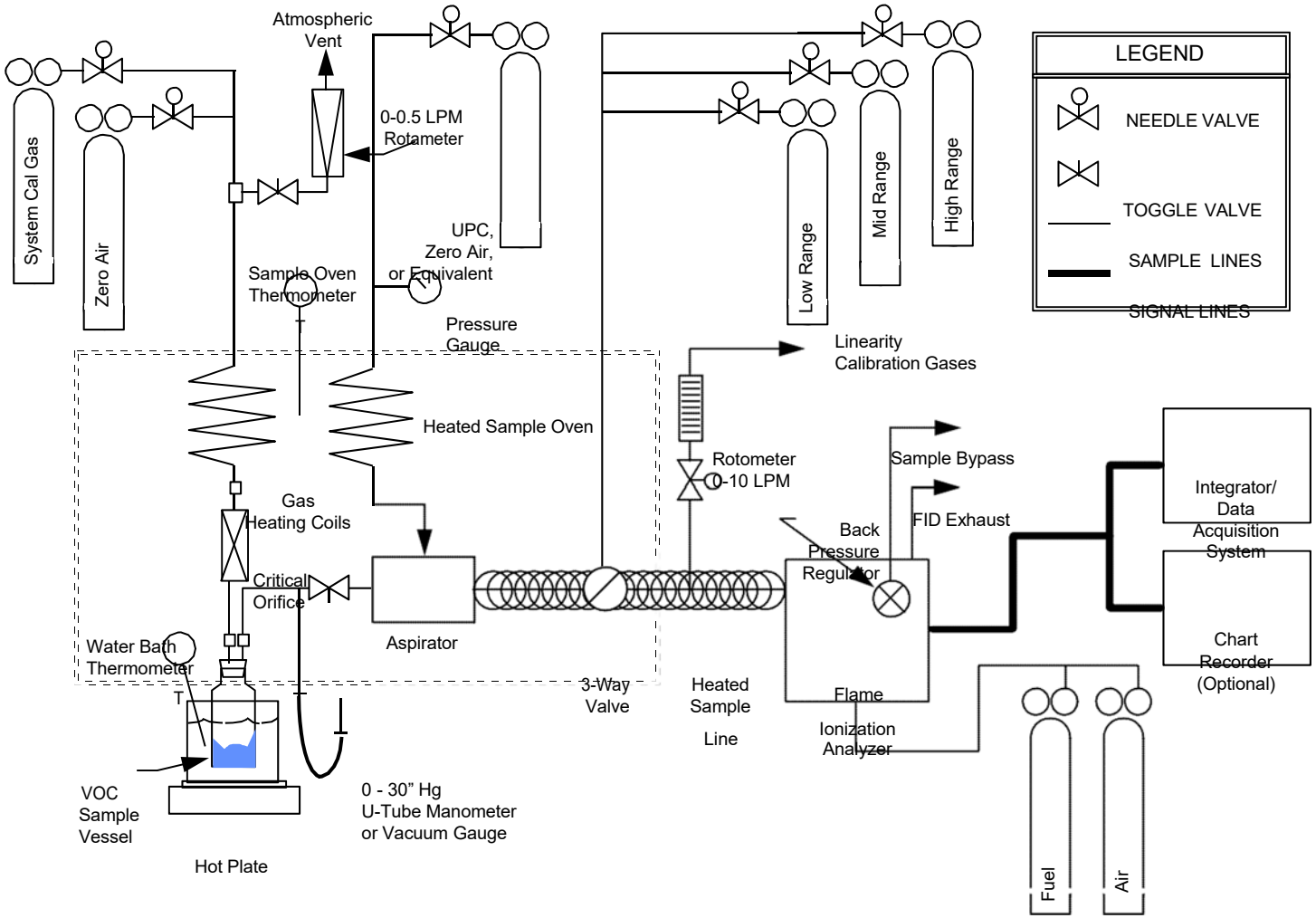

Figure 204A-1. Liquid analysis sample system.

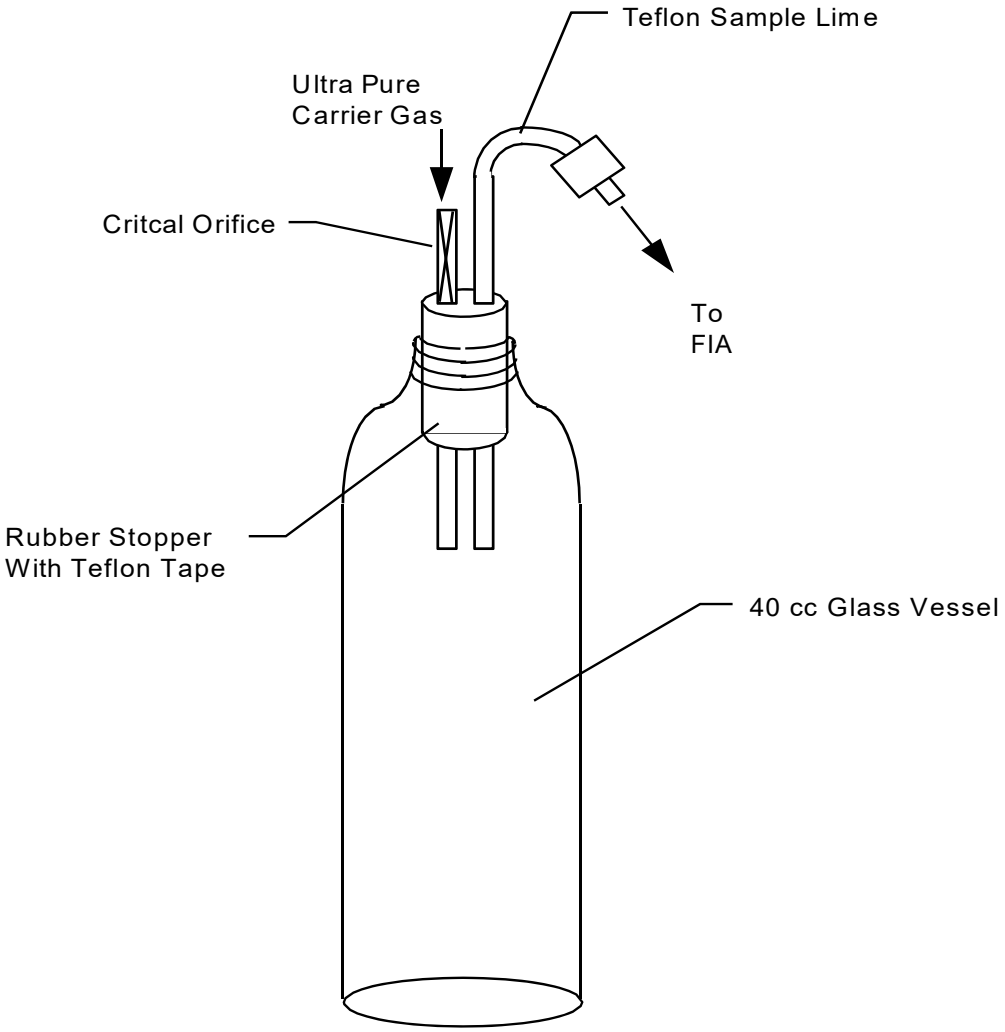

Figure 204A-2. VOC sampling vessel.

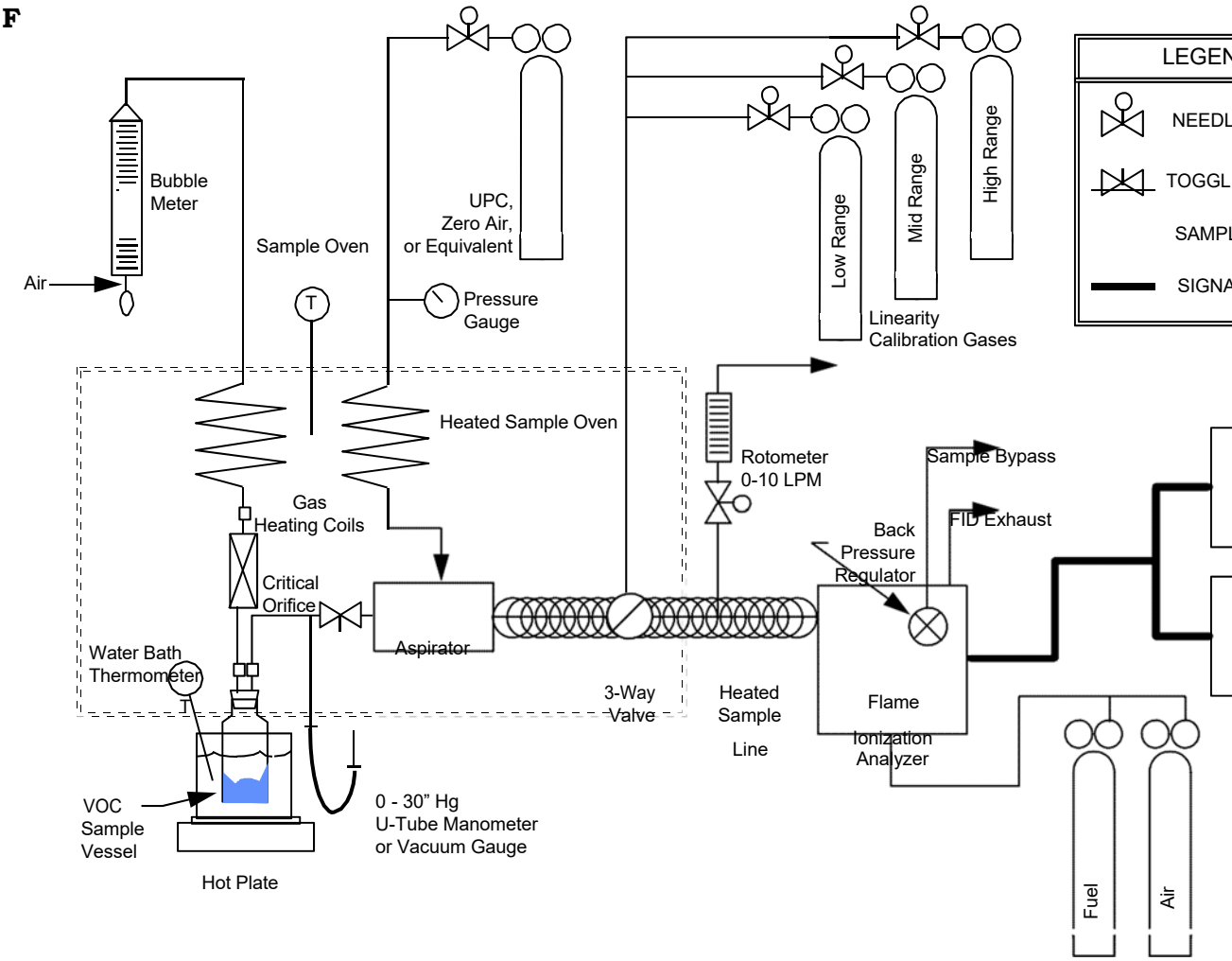

Figure 204A-3. Critical orifice calibration apparatus.

(This page has been intentionally left blank)

METHOD 204B--VOLATILE ORGANIC COMPOUNDS EMISSIONS IN CAPTURED STREAM

1. SCOPE AND APPLICATION

1.1 **Applicability.** This procedure is applicable for determining the volatile organic compounds (VOC) content of captured gas streams. It is intended to be used in the development of gas/gas protocols for determining VOC capture efficiency (CE) for surface coating and printing operations. The procedure may not be acceptable in certain site-specific situations [e.g., when: (1) direct- fired heaters or other circumstances affect the quantity of VOC at the control device inlet; and (2) particulate organic aerosols are formed in the process and are present in the captured emissions].

1.2 **Principle.** The amount of VOC captured (G) is calculated as the sum of the products of the VOC content (C_{Gj}), the flow rate (Q_{Gj}), and the sample time (θ_C) from each captured emissions point.

1.3 **Sampling Requirements.** A CE test shall consist of at least three sampling runs. Each run shall cover at least one complete production cycle, but shall be at least 3 hours long. The sampling time for each run need not exceed 8 hours, even if the production cycle has not been completed.

Alternative sampling times may be used with the approval of the Administrator.

2. SUMMARY OF METHOD

A gas sample is extracted from the source though a heated sample line and, if necessary, a glass fiber filter to a flame ionization analyzer (FIA).

3. SAFETY

Because this procedure is often applied in highly explosive areas, caution and care should be exercised in choosing, installing, and using the appropriate equipment.

4. EQUIPMENT AND SUPPLIES

Mention of trade names or company products does not constitute endorsement. All gas concentrations (percent, ppm) are by volume, unless otherwise noted.

4.1 **Gas VOC Concentration.** A schematic of the measurement system is shown in Figure 204B-1. The main components are as follows:

4.1.1 **Sample Probe.** Stainless steel or equivalent. The probe shall be heated to prevent VOC condensation.

4.1.2 **Calibration Valve Assembly.** Three-way valve assembly at the outlet of the sample probe to direct the zero and calibration gases to the analyzer. Other methods, such as quick-connect lines, to route calibration gases to the outlet of the sample probe are acceptable.

4.1.3 **Sample Line.** Stainless steel or Teflon tubing to transport the sample gas to the analyzer. The sample line must be heated to prevent condensation.

4.1.4 **Sample Pump.** A leak-free pump, to pull the sample gas through the system at a flow rate sufficient to minimize the response time of the measurement system. The components of the pump that contact the gas stream shall be constructed of stainless steel or Teflon. The sample pump must be heated to prevent condensation.

4.1.5 **Sample Flow Rate Control.** A sample flow rate control valve and rotameter, or equivalent, to maintain a constant sampling rate within 10 percent. The flow rate control valve and rotameter must be heated to prevent condensation. A control valve may also be located on the sample pump bypass loop to assist in controlling the sample pressure and flow rate.

4.1.6 **Organic Concentration Analyzer.** An FIA with a span value of 1.5 times the expected concentration as propane; however, other span values may be used if it can be demonstrated to the Administrator's satisfaction that they would provide equally accurate measurements. The system shall be capable of meeting or exceeding the following specifications:

4.1.6.1 **Zero Drift.** Less than ±3.0 percent of the span value.

4.1.6.2 **Calibration Drift.** Less than ±3.0 percent of the span value.

4.1.6.3 **Calibration Error.** Less than ±5.0 percent of the calibration gas value.

4.1.6.4 **Response Time.** Less than 30 seconds.

4.1.7 **Integrator/Data Acquisition System.** An analog or digital device, or computerized data acquisition system used to integrate the FIA response or compute the average response

and record measurement data. The minimum data sampling frequency for computing average or integrated values is one measurement value every 5 seconds. The device shall be capable of recording average values at least once per minute.

4.2 **Captured Emissions Volumetric Flow Rate.**

4.2.1 **Method 2 or 2A Apparatus.** For determining volumetric flow rate.

4.2.2 **Method 3 Apparatus and Reagents.** For determining molecular weight of the gas stream. An estimate of the molecular weight of the gas stream may be used if approved by the Administrator.

4.2.3 **Method 4 Apparatus and Reagents.** For determining moisture content, if necessary.

5. **REAGENTS AND STANDARDS**

5.1 **Calibration and Other Gases.** Gases used for calibration, fuel, and combustion air (if required) are contained in compressed gas cylinders. All calibration gases shall be traceable to National Institute of Standards and Technology standards and shall be certified by the manufacturer to ±1 percent of the tag value. Additionally, the manufacturer of the cylinder should provide a recommended shelf life for each calibration gas cylinder over which the concentration does not change more than ±2 percent from the certified value. For calibration gas values not generally available, dilution systems calibrated using Method 205 may be used. Alternative methods for preparing calibration gas mixtures may be used with the approval of the Administrator.

5.1.1 **Fuel.** The FIA manufacturer's recommended fuel should be used. A 40 percent H_2/60 percent He or 40 percent H_2/60 percent N_2 gas mixture is recommended to avoid an oxygen synergism effect that reportedly occurs when oxygen concentration varies significantly from a mean value. Other mixtures may be used provided the tester can demonstrate to the Administrator that there is no oxygen synergism effect.

5.1.2 **Carrier Gas.** High purity air with less than 1 ppm of organic material (as propane or carbon equivalent) or less than 0.1 percent of the span value, whichever is greater.

5.1.3 **FIA Linearity Calibration Gases.** Low-, mid-, and high-range gas mixture standards with nominal propane concentrations of 20-30, 45-55, and 70-80 percent of the span value in air, respectively. Other calibration values and other span values may be used if it can be shown to the Administrator's satisfaction that equally accurate measurements would be achieved.

5.2 **Particulate Filter.** An in-stack or an out-of-stack glass fiber filter

is recommended if exhaust gas particulate loading is significant. An out-of-stack filter must be heated to prevent any condensation unless it can be demonstrated that no condensation occurs.

6. QUALITY CONTROL

6.1 Required instrument quality control parameters are found in the following sections:

6.1.1 The FIA system must be calibrated as specified in Section 7.1.

6.1.2 The system drift check must be performed as specified in Section 7.2.

6.1.3 The system check must be conducted as specified in Section 7.3.

6.2 **Audits.**

6.2.1 **Analysis Audit Procedure.** Immediately before each test, analyze an audit cylinder as described in Section 7.2. The analysis audit must agree with the audit cylinder concentration within 10 percent.

6.2.2 **Audit Samples and Audit Sample Availability.** Audit samples will be supplied only to enforcement agencies for compliance tests. The availability of audit samples may be obtained by writing:

Source Test Audit Coordinator (STAC) (MD-77B)
Quality Assurance Division
Atmospheric Research and Exposure Assessment Laboratory
U.S. Environmental Protection Agency
Research Triangle Park, NC 27711

or by calling the STAC at (919) 541-7834. The request for the audit sample must be made at least 30 days prior to the scheduled compliance sample analysis.

6.2.3 **Audit Results.** Calculate the audit sample concentration according to the calculation procedure described in the audit instructions included with the audit sample. Fill in the audit sample concentration and the analyst's name on the audit response form included with the audit instructions. Send one copy to the EPA Regional Office or the appropriate enforcement agency, and a second copy to the STAC. The EPA Regional Office or the appropriate enforcement agency will report the results of the audit to the laboratory being audited. Include this response with the results of the compliance samples in relevant reports to the EPA Regional Office or the appropriate enforcement agency.

7. CALIBRATION AND STANDARDIZATION

7.1 **FIA Calibration and Linearity Check.** Make necessary adjustments to the air and fuel supplies for the FIA and ignite the burner. Allow the FIA to warm up for the period recommended by the manufacturer. Inject a calibration gas into the measurement system and adjust the back-pressure regulator to the value required to achieve the flow rates specified by the manufacturer. Inject the zero- and the high-range calibration gases and adjust the analyzer calibration to provide the proper responses. Inject the low- and mid-range gases and record the responses of the measurement system. The calibration and linearity of the system are acceptable if the responses for all four gases are within 5 percent of the respective gas values. If the performance of the system is not acceptable, repair or adjust the system and repeat the linearity check. Conduct a calibration and linearity check after assembling the analysis system and after a major change is made to the system.

7.2 **Systems Drift Checks.** Select the calibration gas that most closely approximates the concentration of the captured emissions for conducting the drift checks. Introduce the zero and calibration gases at the calibration valve assembly and verify that the appropriate gas flow rate and pressure are present at the FIA. Record the measurement system responses to the zero and calibration gases. The performance of the system is acceptable if the difference between the drift check measurement and the value obtained in Section 7.1 is less than 3 percent of the span value. Alternatively, recalibrate the FIA as in section 7.1 and report the results using both sets of calibration data (i.e., data determined following the test period). The data that results in the lowest CE value shall be reported as the results for the test run. Conduct the system drift checks at the end of each run.

7.3 **System Check.** Inject the high-range calibration gas at the inlet of the sampling probe and record the response. The performance of the system is acceptable if the measurement system response is within 5 percent of the value obtained in Section 7.1 for the high-range calibration gas. Conduct a system check before and after each test run.

8. PROCEDURE

8.1. Determination of Volumetric Flow Rate of Captured Emissions

8.1.1 Locate all points where emissions are captured from the affected facility. Using Method 1, determine the sampling points. Be sure to check each site for cyclonic or swirling flow.

8.1.2 Measure the velocity at each sampling site at least once every hour during each sampling run using Method 2 or 2A.

8.2 **Determination of VOC Content of Captured Emissions**

8.2.1 **Analysis Duration.** Measure the VOC responses at each captured emissions point during the entire test run or, if applicable, while the process is operating. If there are multiple captured emission locations, design a sampling system to allow a single FIA to be used to determine the VOC responses at all sampling locations.

8.2.2 **Gas VOC Concentration.**

8.2.2.1 Assemble the sample train as shown in Figure 204B-1. Calibrate the FIA according to the procedure in Section 7.1.

8.2.2.2 Conduct a system check according to the procedure in Section 7.3.

8.2.2.3 Install the sample probe so that the probe is centrally located in the stack, pipe, or duct, and is sealed tightly at the stack port connection.

8.2.2.4 Inject zero gas at the calibration valve assembly. Allow the measurement system response to reach zero. Measure the system response time as the time required for the system to reach the effluent concentration after the calibration valve has been returned to the effluent sampling position.

8.2.2.5 Conduct a system check before, and a system drift check after, each sampling run according to the procedures in Sections 7.2 and 7.3. If the drift check following a run indicates unacceptable performance (see Section 7.3), the run is not valid. Alternatively, recalibrate the FIA as in section 7.1 and report the results using both sets of calibration data (i.e., data determined prior to the test period and data determined following the test period). The data that results in the lowest CE value shall be reported as the results for the test run. The tester may elect to perform system drift checks during the run not to exceed one drift check per hour.

8.2.2.6 Verify that the sample lines, filter, and pump temperatures are 120 ± 5 °C.

8.2.2.7 Begin sampling at the start of the test period and continue to sample during the entire run. Record the starting and ending times and any required process information as appropriate. If multiple captured emission locations are sampled using a single FIA, sample at each location for the same

amount of time (e.g., 2 minutes) and continue to switch from one location to another for the entire test run. Be sure that total sampling time at each location is the same at the end of the test run. Collect at least four separate measurements from each sample point during each hour of testing. Disregard the measurements at each sampling location until two times the response time of the measurement system has elapsed. Continue sampling for at least 1 minute and record the concentration measurements.

8.2.3 **Background Concentration.**

NOTE: Not applicable when the building is used as the temporary total enclosure (TTE).

8.2.3.1 Locate all natural draft openings (NDO's) of the TTE. A sampling point shall be at the center of each NDO, unless otherwise specified by the Administrator. If there are more than six NDO's, choose six sampling points evenly spaced among the NDO's.

8.2.3.2 Assemble the sample train as shown in Figure 204B-2. Calibrate the FIA and conduct a system check according to the procedures in Sections 7.1 and 7.3.

NOTE: This sample train shall be separate from the sample train used to measure the captured emissions.

8.2.3.3 Position the probe at the sampling location.

8.2.3.4 Determine the response time, conduct the system check, and sample according to the procedures described in Sections 8.2.2.4 through 8.2.2.7.

8.2.4 **Alternative Procedure.** The direct interface sampling and analysis procedure described in Section 7.2 of Method 18 may be used to determine the gas VOC concentration. The system must be designed to collect and analyze at least one sample every 10 minutes. If the alternative procedure is used to determine the VOC concentration of the captured emissions, it must also be used to determine the VOC concentration of the uncaptured emissions.

9. DATA ANALYSIS AND CALCULATIONS

9.1 Nomenclature

A_i = area of NDO i, ft^2.

A_N = total area of all NDO's in the enclosure, ft^2.

C_{Bi} = corrected average VOC concentration of background emissions at point i, ppm propane.

C_B = average background concentration, ppm propane.

C_{Gj} = corrected average VOC concentration of captured emissions at point j, ppm propane.

C_{DH} = average measured concentration for the drift check calibration gas, ppm propane.

C_{D0} = average system drift check concentration for zero concentration gas, ppm propane.

C_H = actual concentration of the drift check calibration gas, ppm propane.

C_i = uncorrected average background VOC concentration measured at point i, ppm propane.

C_j = uncorrected average VOC concentration measured at point j, ppm propane.

G = total VOC content of captured emissions, kg.

K_1 = 1.830×10^{-6} kg/(m^3-ppm).

n = number of measurement points.

Q_{Gj} = average effluent volumetric flow rate corrected to standard conditions at captured emissions point j, m^3/min.

θ_C = total duration of captured emissions.

9.2 Calculations

9.2.1 Total VOC Captured Emissions.

$$G = \sum_{j=1}^{n} \left(C_{Gj} - C_B\right) Q_{Gj} \theta_C K_1 \qquad \textbf{Eq. 204B-1}$$

9.2.2 VOC Concentration of the Captured Emissions at Point j.

$$C_{Gj} = \left(C_j - C_{DO}\right) \frac{C_H}{C_{DH} - C_{DO}} \qquad \textbf{Eq. 204B-2}$$

Background VOC Concentration at Point I.

$$C_{Bi} = \left(C_i - C_{DO}\right)\frac{C_H}{C_{DH} - C_{DO}}$$ **Eq. 204B-3**

9.2.3 **Average Background Concentration.**

$$C_B = \frac{\sum_{i=1}^{n} C_{Bi} A_i}{A_N}$$ **Eq. 204B-4**

NOTE: If the concentration at each point is within 20 percent of the average concentration of all points, then use the arithmetic average.

10. **METHOD PERFORMANCE.**

The measurement uncertainties are estimated for each captured or uncaptured emissions point as follows: Q_{Gj} = ±5.5 percent and C_{Gj} = ±5.0 percent. Based on these numbers, the probable uncertainty for G is estimated at about ±7.4 percent.

11. **DIAGRAMS**

(See following pages)

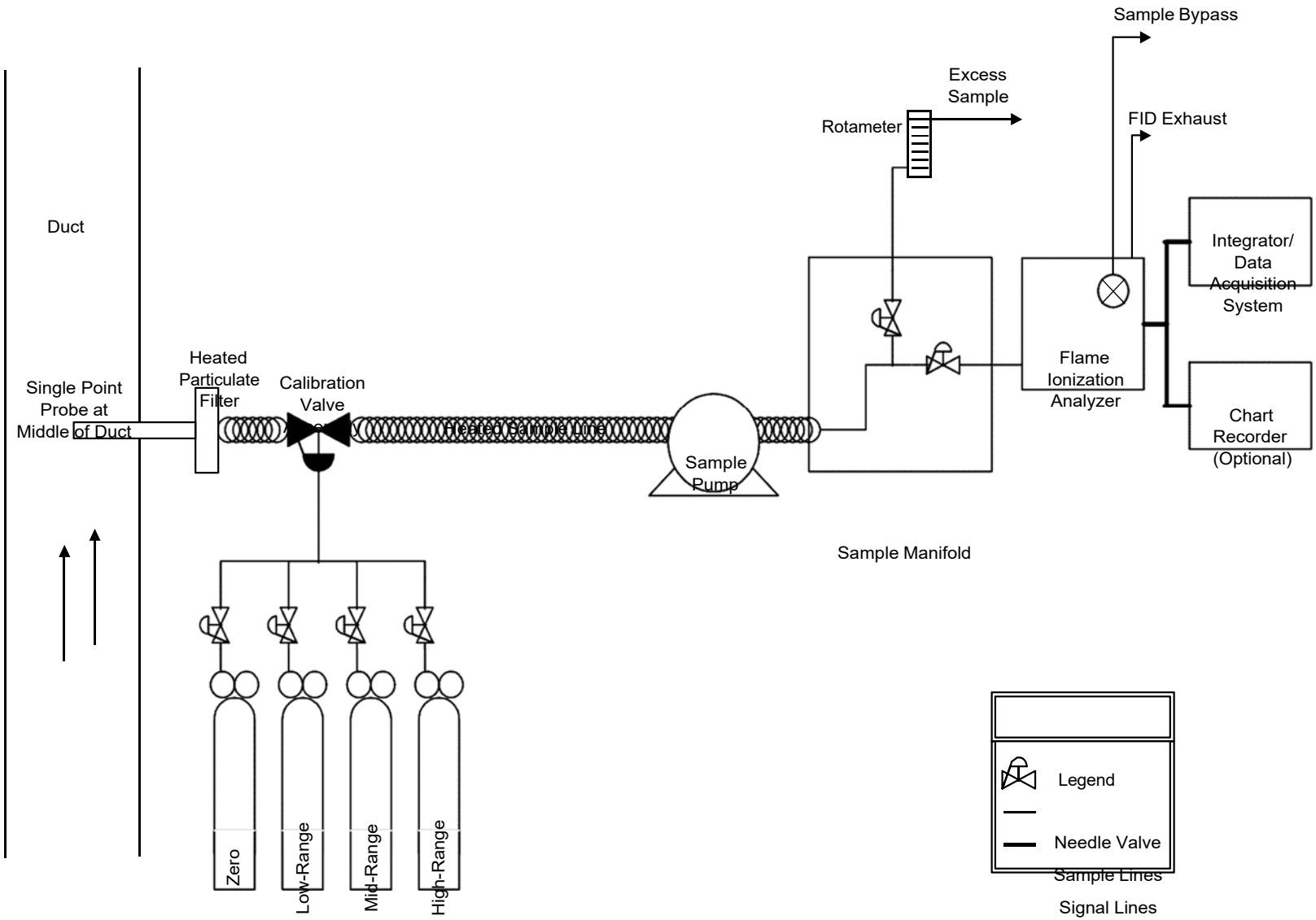

Figure 204B-1. Gas VOC concentration measurement system.

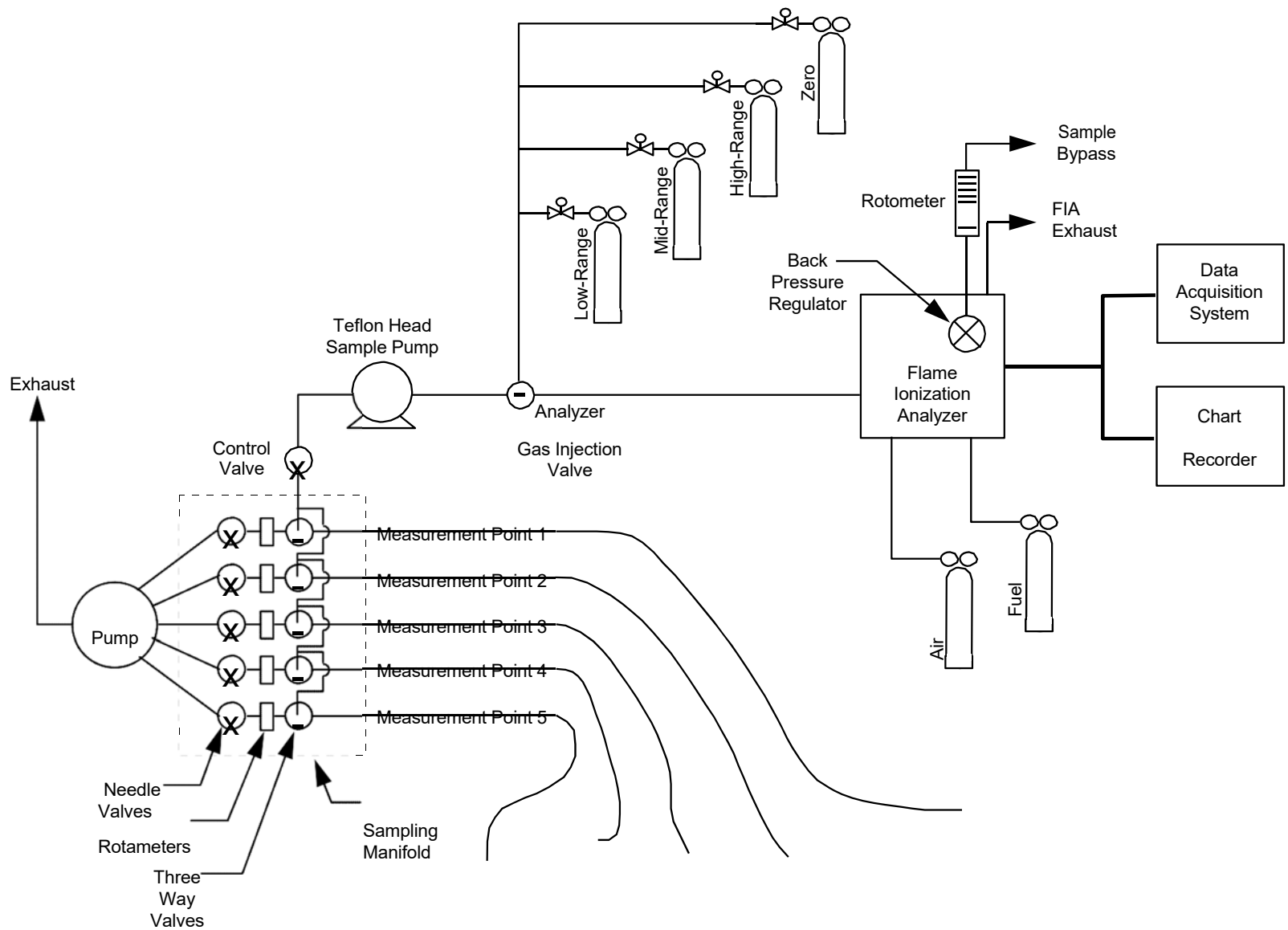

Figure 204B-2. Background measurement system.

(This page has been intentionally left blank)

METHOD 204C--VOLATILE ORGANIC COMPOUNDS EMISSIONS IN CAPTURED STREAM (DILUTION TECHNIQUE)

1. SCOPE AND APPLICATION

1.1 **Applicability.** This procedure is applicable for determining the volatile organic compounds (VOC) content of captured gas streams. It is intended to be used in the development of a gas/gas protocol in which uncaptured emissions are also measured for determining VOC capture efficiency (CE) for surface coating and printing operations. A dilution system is used to reduce the VOC concentration of the captured emissions to about the same concentration as the uncaptured emissions. The procedure may not be acceptable in certain site-specific situations [e.g., when: (1) direct-fired heaters or other circumstances affect the quantity of VOC at the control device inlet; and (2) particulate organic aerosols are formed in the process and are present in the captured emissions].

1.2 **Principle.** The amount of VOC captured (G) is calculated as the sum of the products of the VOC content (C_{Gj}), the flow rate (Q_{Gj}), and the sampling time (q_C) from each captured emissions point.

1.3 **Sampling Requirements.** A CE test shall consist of at least three sampling runs. Each run shall cover at least one complete production cycle, but shall be at least 3 hours long. The sampling time for each run need not exceed 8 hours, even if the production cycle has not been completed. Alternative sampling times may be used with the approval of the Administrator.

2. SUMMARY OF METHOD

A gas sample is extracted from the source using an in-stack dilution probe through a heated sample line and, if necessary, a glass fiber filter to a flame ionization analyzer (FIA). The sample train contains a sample gas manifold which allows multiple points to be sampled using a single FIA.

3. SAFETY

Because this procedure is often applied in highly explosive areas, caution and care should be exercised in choosing, installing, and using the appropriate equipment.

4. EQUIPMENT AND SUPPLIES

Mention of trade names or company products does not constitute endorsement. All gas concentrations (percent, ppm) are by volume, unless otherwise noted.

4.1 **Gas VOC Concentration.** A schematic of the measurement

system is shown in Figure 204C-1. The main components are as follows:

4.1.1 **Dilution System.** A Kipp in-stack dilution probe and controller or similar device may be used. The dilution rate may be changed by substituting different critical orifices or adjustments of the aspirator supply pressure. The dilution system shall be heated to prevent VOC condensation. Note: An out-of-stack dilution device may be used.

4.1.2 **Calibration Valve Assembly.** Three-way valve assembly at the outlet of the sample probe to direct the zero and calibration gases to the analyzer. Other methods, such as quick-connect lines, to route calibration gases to the outlet of the sample probe are acceptable.

4.1.3 **Sample Line.** Stainless steel or Teflon tubing to transport the sample gas to the analyzer. The sample line must be heated to prevent condensation.

4.1.4 **Sample Pump.** A leak-free pump, to pull the sample gas through the system at a flow rate sufficient to minimize the response time of the measurement system. The components of the pump that contact the gas stream shall be constructed of stainless steel or Teflon. The sample pump must be heated to prevent condensation.

4.1.5 **Sample Flow Rate Control.** A sample flow rate control valve and rotameter, or equivalent, to maintain a constant sampling rate within 10 percent. The flow control valve and rotameter must be heated to prevent condensation. A control valve may also be located on the sample pump bypass loop to assist in controlling the sample pressure and flow rate.

4.1.6 **Sample Gas Manifold.** Capable of diverting a portion of the sample gas stream to the FIA, and the remainder to the bypass discharge vent. The manifold components shall be constructed of stainless steel or Teflon. If captured or uncaptured emissions are to be measured at multiple locations, the measurement system shall be designed to use separate sampling probes, lines, and pumps for each measurement location and a common sample gas manifold and FIA. The sample gas manifold and connecting lines to the FIA must be heated to prevent condensation.

NOTE: Depending on the number of sampling points and their location, it may not be possible to use only one FIA. However to reduce the effect of calibration error, the number of FIA's used during a test should be keep as small as possible.

4.1.7 **Organic Concentration Analyzer.** An FIA with a span value of 1.5 times the expected concentration as propane; however, other span values may be used if it can be demonstrated to the Administrator's satisfaction that they would provide equally accurate measurements. The system shall be capable of meeting or exceeding the following specifications:

4.1.7.1 **Zero Drift.** Less than ±3.0 percent of the span value.

4.1.7.2 **Calibration Drift.** Less than ±3.0 percent of the span value.

4.1.7.3 **Calibration Error.** Less than ±5.0 percent of the calibration gas value.

4.1.7.4 **Response Time.** Less than 30 seconds.

4.1.8 **Integrator/Data Acquisition System.** An analog or digital device or computerized data acquisition system used to integrate the FIA response or compute the average response and record measurement data. The minimum data sampling frequency for computing average or integrated values is one measurement value every 5 seconds. The device shall be capable of recording average values at least once per minute.

4.2 **Captured Emissions Volumetric Flow Rate.**

4.2.1 **Method 2 or 2A Apparatus.** For determining volumetric flow rate.

4.2.2 **Method 3 Apparatus and Reagents.** For determining molecular weight of the gas stream. An estimate of the molecular weight of the gas stream may be used if approved by the Administrator.

4.2.3 **Method 4 Apparatus and Reagents.** For determining moisture content, if necessary.

5. REAGENTS AND STANDARDS

5.1 **Calibration and Other Gases.** Gases used for calibration, fuel, and combustion air (if required) are contained in compressed gas cylinders. All calibration gases shall be traceable to National Institute of Standards and Technology standards and shall be certified by the manufacturer to ±1 percent of the tag value. Additionally, the manufacturer of the cylinder should provide a recommended shelf life for each calibration gas cylinder over which the concentration does not change more than ±2 percent from the certified value. For

calibration gas values not generally available, dilution systems calibrated using Method 205 may be used. Alternative methods for preparing calibration gas mixtures may be used with the approval of the Administrator.

5.1.1 **Fuel.** The FIA manufacturer's recommended fuel should be used. A 40 percent H_2/60 percent He or 40 percent H_2/60 percent N_2 gas mixture is recommended to avoid an oxygen synergism effect that reportedly occurs when oxygen concentration varies significantly from a mean value. Other mixtures may be used provided the tester can demonstrate to the Administrator that there is no oxygen synergism effect.

5.1.2 **Carrier Gas and Dilution Air Supply.** High purity air with less than 1 ppm of organic material (as propane or carbon equivalent), or less than 0.1 percent of the span value, whichever is greater.

5.1.3 **FIA Linearity Calibration Gases.** Low-, mid-, and high-range gas mixture standards with nominal propane concentrations of 20-30, 45-55, and 70-80 percent of the span value in air, respectively. Other calibration values and other span values may be used if it can be shown to theAdministrator's satisfaction that equally accurate measurements would be achieved.

5.1.4 **Dilution Check Gas.** Gas mixture standard containing propane in air, approximately half the span value after dilution.

5.2 **Particulate Filter.** An in-stack or an out-of-stack glass fiber filter is recommended if exhaust gas particulate loading is significant. An out-of-stack filter must be heated to prevent any condensation unless it can be demonstrated that no condensation occurs.

6. QUALITY CONTROL

6.1 Required instrument quality control parameters are found in the following sections:

6.1.1 The FIA system must be calibrated as specified in Section 7.1.

6.1.2 The system drift check must be performed as specified in Section 7.2.

6.1.3 The dilution factor must be determined as specified in Section 7.3.

6.1.4 The system check must be conducted as specified in Section 7.4.

6.2 **Audits.**

6.2.1 **Analysis Audit Procedure.** Immediately before each test, analyze an audit cylinder as described in Section 7.2. The analysis audit must agree with the audit cylinder concentration within 10 percent.

6.2.2 **Audit Samples and Audit Sample Availability.** Audit samples will be supplied only to enforcement agencies for compliance tests. The availability of audit samples may be obtained by writing:

Source Test Audit Coordinator (STAC) (MD-77B) Quality Assurance Division
Atmospheric Research and Exposure Assessment Laboratory
U.S. Environmental Protection Agency
Research Triangle Park, NC 27711

or by calling the STAC at (919) 541-7834. The request for the audit sample must be made at least 30 days prior to the scheduled compliance sample analysis.

6.2.3 **Audit Results.** Calculate the audit sample concentration according to the calculation procedure described in the audit instructions included with the audit sample. Fill in the audit sample concentration and the analyst's name on the audit response form included with the audit instructions. Send one copy to the EPA Regional Office or the appropriate enforcement agency, and a second copy to the STAC. The EPA Regional Office or the appropriate enforcement agency will report the results of the audit to the laboratory being audited. Include this response with the results of the compliance samples in relevant reports to the EPA Regional Office or the appropriate enforcement agency.

7. CALIBRATION AND STANDARDIZATION

7.1 **FIA Calibration and Linearity Check.** Make necessary adjustments to the air and fuel supplies for the FIA and ignite the burner. Allow the FIA to warm up for the period recommended by the manufacturer. Inject a calibration gas into the measurement system after the dilution system and adjust the back-pressure regulator to the value required to achieve the flow rates specified by the manufacturer. Inject the zero- and the high-range calibration gases and adjust the analyzer calibration to provide the proper responses. Inject the low- and mid-range gases and record the responses of the measurement system. The calibration and linearity of the system are acceptable if the responses for all four gases are within 5 percent of the respective gas values. If the performance of the system is not acceptable, repair or adjust the system and repeat the linearity check. Conduct a

calibration and linearity check after assembling the analysis system and after a major change is made to the system.

7.2 **Systems Drift Checks.** Select the calibration gas that most closely approximates the concentration of the diluted captured emissions for conducting the drift checks. Introduce the zero and calibration gases at the calibration valve assembly, and verify that the appropriate gas flow rate and pressure are present at the FIA. Record the measurement system responses to the zero and calibration gases. The performance of the system is acceptable if the difference between the drift check measurement and the value obtained in Section 7.1 is less than 3 percent of the span value. Alternatively, recalibrate the FIA as in section 7.1 and report the results using both sets of calibration data (i.e., data determined prior to the test period and data determined following the test period). The data that results in the lowest CE value shall be reported as the results for the test run. Conduct the system drift check at the end of each run.

7.3 **Determination of Dilution Factor.** Inject the dilution check gas into the measurement system before the dilution system and record the response. Calculate the dilution factor using Equation 204C-3.

7.4 **System Check.** Inject the high-range calibration gas at the inlet to the sampling probe while the dilution air is turned off. Record the response. The performance of the system is acceptable if the measurement system response is within 5 percent of the value obtained in Section 7.1 for the high-range calibration gas. Conduct a system check before and after each test run.

8. PROCEDURE

8.1 Determination of Volumetric Flow Rate of Captured Emissions

8.1.1 Locate all points where emissions are captured from the affected facility. Using Method 1, determine the sampling points. Be sure to check each site for cyclonic or swirling flow.

8.2.2 Measure the velocity at each sampling site at least once every hour during each sampling run using Method 2 or 2A.

8.2 Determination of VOC Content of Captured Emissions

8.2.1 **Analysis Duration.** Measure the VOC responses at each captured emissions point during the entire test run or, if applicable, while the process is operating. If there are multiple captured emissions locations, design a sampling system to allow a single FIA to be

used to determine the VOC responses at all sampling locations.

8.2.2 **Gas VOC Concentration.**

8.2.2.1 Assemble the sample train as shown in Figure 204C-1. Calibrate the FIA according to the procedure in Section 7.1.

8.2.2.2 Set the dilution ratio and determine the dilution factor according to the procedure in Section 7.3.

8.2.2.3 Conduct a system check according to the procedure in Section 7.4.

8.2.2.4 Install the sample probe so that the probe is centrally located in the stack, pipe, or duct, and is sealed tightly at the stack port connection.

8.2.2.5 Inject zero gas at the calibration valve assembly. Measure the system response time as the time required for the system to reach the effluent concentration after the calibration valve has been returned to the effluent sampling position.

8.2.2.6 Conduct a system check before, and a system drift check after, each sampling run according to the procedures in Sections 7.2 and 7.4. If the drift check following a run indicates unacceptable performance (see Section 7.4), the run is not valid. Alternatively, recalibrate the FIA as in section 7.1 and report the results using both sets of calibration data (i.e., data determined prior to the test period and data determined following the test period). The data that results in the lowest CE value shall be reported as the results for the test run. The tester may elect to perform system drift checks during the run not to exceed one drift check per hour.

8.2.2.7 Verify that the sample lines, filter, and pump temperatures are 120 ± 5 °C.

8.2.2.8 Begin sampling at the start of the test period and continue to sample during the entire run. Record the starting and ending times and any required process information as appropriate. If multiple captured emission locations are sampled using a single FIA, sample at each location for the same amount of time (e.g., 2 min.) and continue to switch from one location to another for the entire

test run. Be sure that total sampling time at each location is the same at the end of the test run. Collect at least four separate measurements from each sample point during each hour of testing. Disregard the measurements at each sampling location until two times the response time of the measurement system has elapsed. Continue sampling for at least 1 minute and record the concentration measurements.

8.2.3 **Background Concentration.**

NOTE: Not applicable when the building is used as the temporary total enclosure (TTE).

8.2.3.1 Locate all natural draft openings (NDO's) of the TTE. A sampling point shall be at the center of each NDO, unless otherwise approved by the Administrator. If there are more than six NDO's, choose six sampling points evenly spaced among the NDO's.

8.2.3.2 Assemble the sample train as shown in Figure 204C-2. Calibrate the FIA and conduct a system check according to the procedures in Sections 7.1 and 7.4.

8.2.3.3 Position the probe at the sampling location.

8.2.3.4 Determine the response time, conduct the system check, and sample according to the procedures described in Sections 8.2.2.4 through 8.2.2.8.

8.2.4 **Alternative Procedure.** The direct interface sampling and analysis procedure described in Section 7.2 of Method 18 may be used to determine the gas VOC concentration. The system must be designed to collect and analyze at least one sample every 10 minutes. If the alternative procedure is used to determine the VOC concentration of the captured emissions, it must also be used to determine the VOC concentration of the uncaptured emissions.

9. DATA ANALYSIS AND CALCULATIONS

9.1 Nomenclature

$\mathbf{A_i}$ = area of NDO i, ft^2.

$\mathbf{A_N}$ = total area of all NDO's in the enclosure, ft^2.

$\mathbf{C_A}$ = actual concentration of the dilution check gas, ppm propane.

C_{Bi} = corrected average VOC concentration of background emissions at point i, ppm propane.

C_B = average background concentration, ppm propane.

C_{DH} = average measured concentration for the drift check calibration gas, ppm propane.

C_{DO} = average system drift check concentration for zero concentration gas, ppm propane.

C_H = actual concentration of the drift check calibration gas, ppm propane.

C_i = uncorrected average background VOC concentration measured at point i, ppm propane.

C_j = uncorrected average VOC concentration measured at point j, ppm propane.

C_M = measured concentration of the dilution check gas, ppm propane.

DF = dilution factor.

G = total VOC content of captured emissions, kg.

K_1 = 1.830×10^{-6} kg/(m^3-ppm).

n = number of measurement points.

Q_{Gj} = average effluent volumetric flow rate corrected to standard conditions at captured emissions point j, m^3/min.

θ_C = total duration of CE sampling run, min.

9.2 Calculations

9.2.1 Total VOC Captured Emissions.

$$G = \sum_{j=1}^{n} \left(C_{Gj} - C_B\right) Q_{Gj} \theta_C K_1 \qquad \textbf{Eq. 204C-1}$$

9.2.2 VOC Concentration of the Captured Emissions at Point j.

$$C_{Gj} = DF\left(C_j - C_O\right)\frac{C_H}{C_{DH} - C_{DO}} \qquad \textbf{Eq. 204C-2}$$

9.2.3 Dilution Factor.

$$DF = \frac{C_A}{C_M}$$ **Eq. 204C-3**

9.2.4 **Background VOC Concentration at Point I.**

$$C_{Bi} = (C_i - C_{DO})\frac{C_H}{C_{DH} - C_{DO}}$$ **Eq. 204C-4**

9.2.5 **Average Background Concentration.**

$$C_B = \frac{\sum_{i=1}^{n} C_{Bi} A_i}{A_N}$$ **Eq. 204C-5**

NOTE: If the concentration at each point is within 20 percent of the average concentration of all points, then use the arithmetic average.

10. **METHOD PERFORMANCE.**

The measurement uncertainties are estimated for each captured or uncaptured emissions point as follows: Q_{Gj} = ±5.5 percent and C_{Gj} = ±5 percent. Based on these numbers, the probable uncertainty for G is estimated at about ±7.4 percent.

11. **DIAGRAMS**

(See following pages)

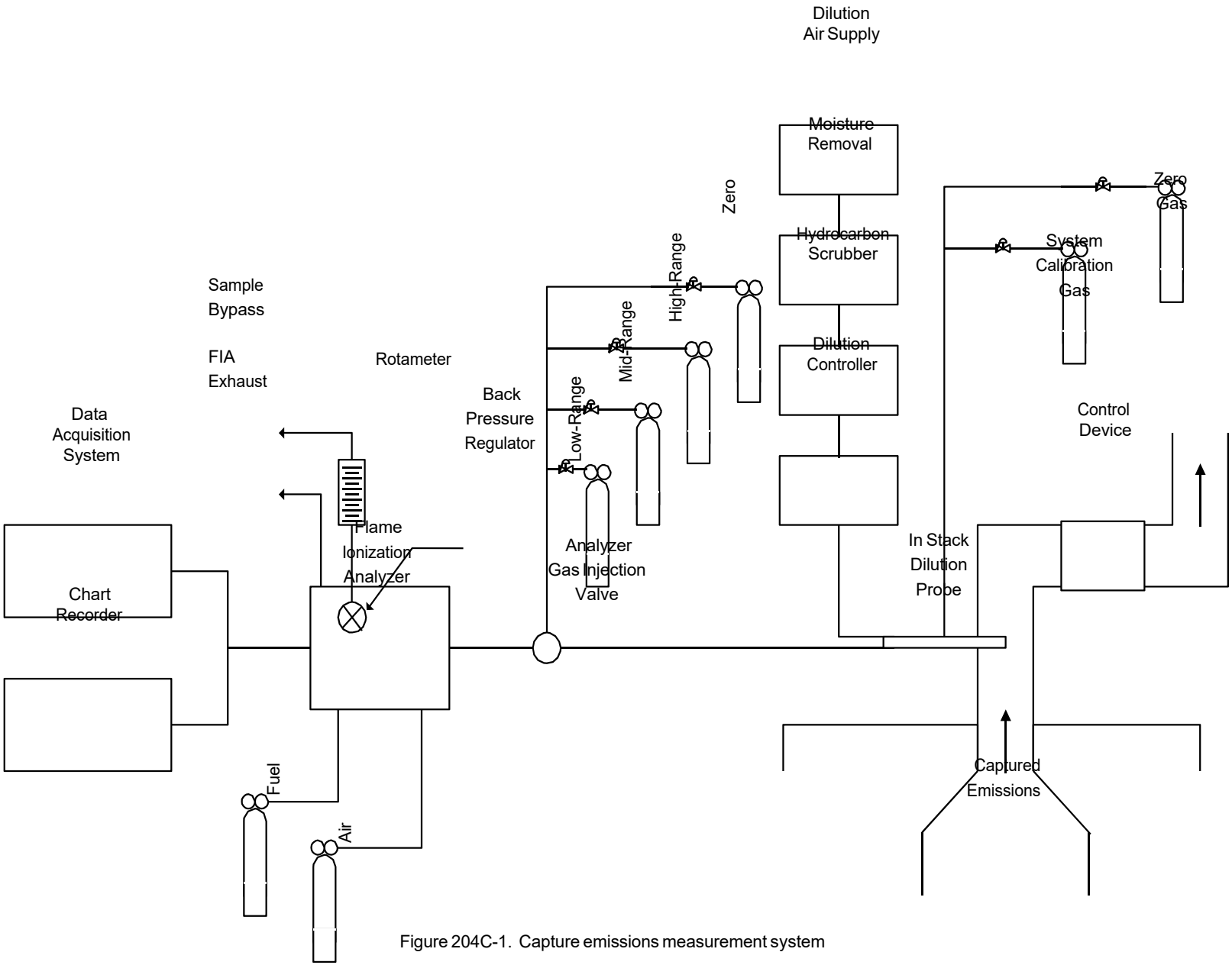

Figure 204C-1. Capture emissions measurement system

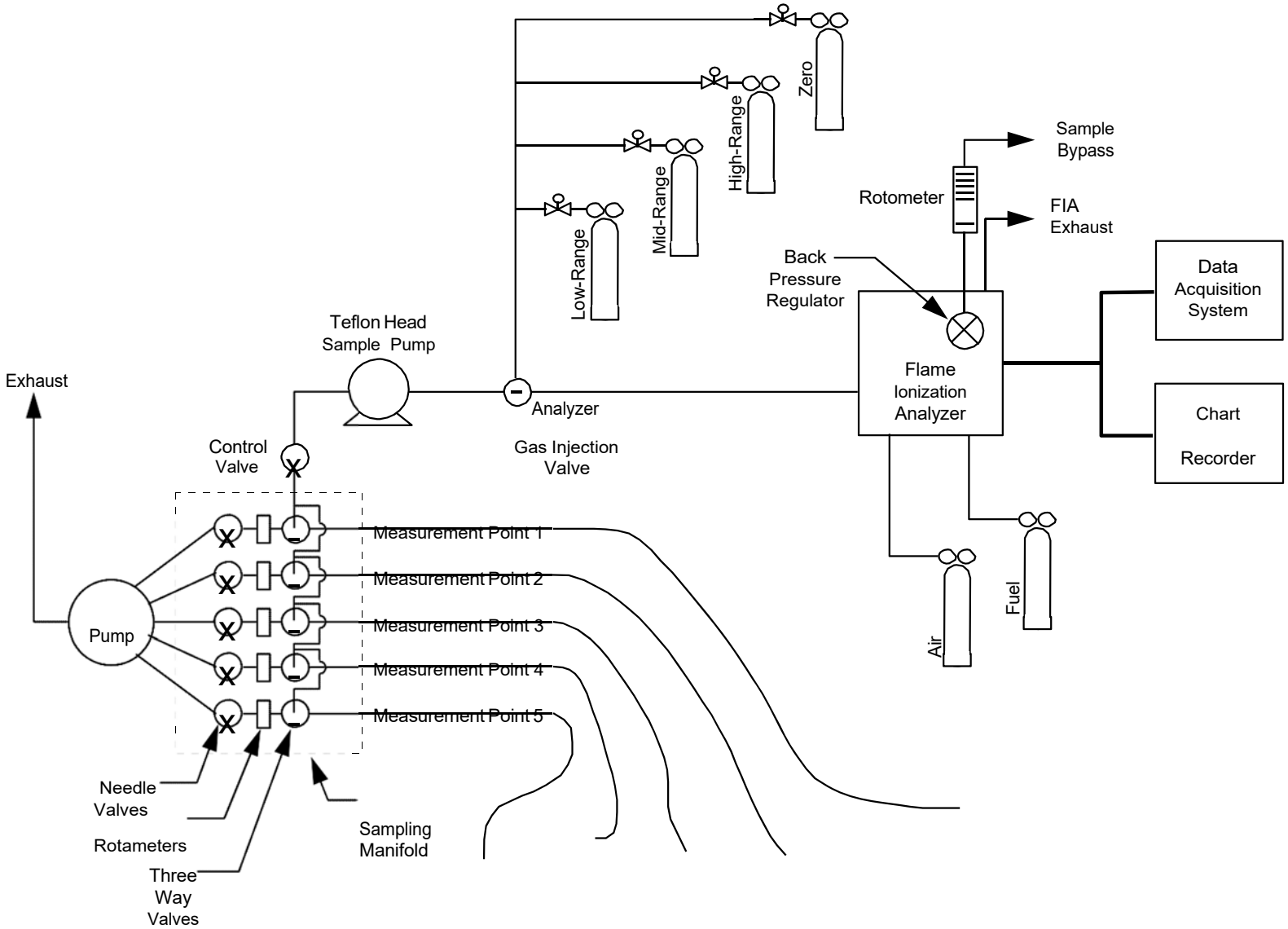

Figure 204C-2. Background measurement system.

(This page has been intentionally left blank)

METHOD 204D--VOLATILE ORGANIC COMPOUNDS EMISSIONS IN UNCAPTURED STREAM FROM TEMPORARY TOTAL ENCLOSURE

1. SCOPE AND APPLICATION

1.1 **Applicability.** This procedure is applicable for determining the uncaptured volatile organic compounds (VOC) emissions from a temporary total enclosure (TTE). It is intended to be used as a segment in the development of liquid/gas or gas/gas protocols for determining VOC capture efficiency (CE) for surface coating and printing operations.

1.2 **Principle.** The amount of uncaptured VOC emissions (F) from the TTE is calculated as the sum of the products of the VOC content (C_{Fj}), the flow rate (Q_{Fj}) from each uncaptured emissions point, and the sampling time (θ_F).

1.3 **Sampling Requirements.** A CE test shall consist of at least three sampling runs. Each run shall cover at least one complete production cycle, but shall be at least 3 hours long. The sampling time for each run need not exceed 8 hours, even if the production cycle has not been completed. Alternative sampling times may be used with the approval of the Administrator.

2. SUMMARY OF METHOD

A gas sample is extracted from the uncaptured exhaust duct of a TTE through a heated sample line and, if necessary, a glass fiber filter to a flame ionization analyzer (FIA).

3. SAFETY

Because this procedure is often applied in highly explosive areas, caution and care should be exercised in choosing, installing, and using the appropriate equipment.

4. EQUIPMENT AND SUPPLIES

Mention of trade names or company products does not constitute endorsement. All gas concentrations (percent, ppm) are by volume, unless otherwise noted.

4.1 **Gas VOC Concentration.** A schematic of the measurement system is shown in Figure 204D-1. The main components are as follows:

4.1.1 **Sample Probe.** Stainless steel or equivalent. The probe shall be heated to prevent VOC condensation.

4.1.2 **Calibration Valve Assembly.** Three-way valve assembly at the outlet of the sample probe to direct the zero and calibration gases to the analyzer. Other methods, such as quick-connect lines, to route calibration gases to the outlet of the sample probe are acceptable.

4.1.3 **Sample Line.** Stainless steel or Teflon tubing to transport the sample gas to the analyzer. The sample line must be heated to prevent condensation.

4.1.4 **Sample Pump.** A leak-free pump, to pull the sample gas through the system at a flow rate sufficient to minimize the response time of the measurement system. The components of the pump that contact the gas stream shall be constructed of stainless steel or Teflon. The sample pump must be heated to prevent condensation.

4.1.5 **Sample Flow Rate Control.** A sample flow rate control valve and rotameter, or equivalent, to maintain a constant sampling rate within 10 percent. The flow control valve and rotameter must be heated to prevent condensation. A control valve may also be located on the sample pump bypass loop to assist in controlling the sample pressure and flow rate.

4.1.6 **Sample Gas Manifold.** Capable of diverting a portion of the sample gas stream to the FIA, and the remainder to the bypass discharge vent. The manifold components shall be constructed of stainless steel or Teflon. If emissions are to be measured at multiple locations, the measurement system shall be designed to use separate sampling probes, lines, and pumps for each measurement location and a common sample gas manifold and FIA. The sample gas manifold and connecting lines to the FIA must be heated to prevent condensation.

4.1.7 **Organic Concentration Analyzer.** An FIA with a span value of 1.5 times the expected concentration as propane; however, other span values may be used if it can be demonstrated to the Administrator's satisfaction that they would provide more accurate measurements. The system shall be capable of meeting or exceeding the following specifications:

4.1.7.1 **Zero Drift.** Less than ±3.0 percent of the span value.

4.1.7.2 **Calibration Drift.** Less than ±3.0 percent of the span value.

4.1.7.3 **Calibration Error.** Less than ±5.0 percent of the calibration gas value.

4.1.7.4 **Response Time.** Less than 30 seconds.

4.1.8 **Integrator/Data Acquisition System.** An analog or digital device or computerized data acquisition system used to integrate the FIA response or compute the average response and record measurement data. The minimum data sampling frequency for computing average or integrated values is one measurement value every 5 seconds. The device shall be capable of recording average values at least once per minute.

4.2 **Uncaptured Emissions Volumetric Flow Rate.**

4.2.1 **Method 2 or 2A Apparatus.** For determining volumetric flow rate.

4.2.2 **Method 3 Apparatus and Reagents.** For determining molecular weight of the gas stream. An estimate of the molecular weight of the gas stream may be used if approved by the Administrator.

4.2.3 **Method 4 Apparatus and Reagents.** For determining moisture content, if necessary.

4.3 **Temporary Total Enclosure.** The criteria for designing an acceptable TTE are specified in Method 204.

5. REAGENTS AND STANDARDS

5.1 **Calibration and Other Gases.** Gases used for calibration, fuel, and combustion air (if required) are contained in compressed gas cylinders. All calibration gases shall be traceable to National Institute of Standards and Technology standards and shall be certified by the manufacturer to ±1 percent of the tag value. Additionally, the manufacturer of the cylinder should provide a recommended shelf life for each calibration gas cylinder over which the concentration does not change more than ±2 percent from the certified value. For calibration gas values not generally available, dilution systems calibrated using Method 205 may be used. Alternative methods for preparing calibration gas mixtures may be used with the approval of the Administrator.

5.1.1 **Fuel.** The FIA manufacturer's recommended fuel should be used. A 40 percent H_2/60 percent He or 40 percent H_2/60 percent N_2 gas mixture is recommended to avoid an oxygen synergism effect that reportedly occurs when oxygen concentration varies significantly from a mean value. Other mixtures may be used provided the tester can demonstrate the Administrator that there is no oxygen synergism effect.

5.1.2 **Carrier Gas.** High purity air with less than 1 ppm of organic material (as propane or carbon equivalent) or less than 0.1 percent of the span value, whichever is greater.

5.1.3 **FIA Linearity Calibration Gases.** Low-, mid-, and high-range gas mixture standards with nominal propane concentrations of 20-30, 45-55, and 70-80 percent of the span value in air, respectively. Other calibration values and other span values may be used if it can be shown to the Administrator's satisfaction that equally accurate measurements would be achieved.

5.2 **Particulate Filter.** An in-stack or an out-of-stack glass fiber filter is recommended if exhaust gas particulate loading is significant. An out-of-stack filter must be heated to prevent any condensation unless it can be demonstrated that no condensation occurs.

6. QUALITY CONTROL

6.1 Required instrument quality control parameters are found in the following sections:

6.1.1 The FIA system must be calibrated as specified in Section 7.1.

6.1.2 The system drift check must be performed as specified in Section 7.2.

6.1.3 The system check must be conducted as specified in Section 7.3.

6.2 **Audits.**

6.2.1 **Analysis Audit Procedure.** Immediately before each test, analyze an audit cylinder as described in Section 7.2. The analysis audit must agree with the audit cylinder concentration within 10 percent.

6.2.2 **Audit Samples and Audit Sample Availability.** Audit samples will be supplied only to enforcement agencies for compliance tests. The availability of audit samples may be obtained by writing:

Source Test Audit Coordinator (STAC) (MD-77B)
Quality Assurance Division
Atmospheric Research and Exposure Assessment Laboratory
U.S. Environmental Protection Agency
Research Triangle Park, NC 27711

or by calling the STAC at (919) 541-7834. The request for the audit sample must be made at least 30 days prior to the scheduled compliance sample analysis.

6.2.3 **Audit Results.** Calculate the audit sample concentration according to the calculation procedure described in the audit instructions included with the audit sample. Fill in the audit sample concentration and the analyst's name on the

audit response form included with the audit instructions. Send one copy to the EPA Regional Office or the appropriate enforcement agency, and a second copy to the STAC. The EPA Regional Office or the appropriate enforcement agency will report the results of the audit to the laboratory being audited. Include this response with the results of the compliance samples in relevant reports to the EPA Regional Office or the appropriate enforcement agency.

7. CALIBRATION AND STANDARDIZATION

7.1 **FIA Calibration and Linearity Check.** Make necessary adjustments to the air and fuel supplies for the FIA and ignite the burner. Allow the FIA to warm up for the period recommended by the manufacturer. Inject a calibration gas into the measurement system and adjust the back-pressure regulator to the value required to achieve the flow rates specified by the manufacturer. Inject the zero- and the high-range calibration gases and adjust the analyzer calibration to provide the proper responses. Inject the low- and mid-range gases and record the responses of the measurement system. The calibration and linearity of the system are acceptable if the responses for all four gases are within 5 percent of the respective gas values. If the performance of the system is not acceptable, repair or adjust the system and repeat the linearity check. Conduct a calibration and linearity check after assembling the analysis system and after a major change is made to the system.

7.2 **Systems Drift Checks.** Select the calibration gas concentration that most closely approximates that of the uncaptured gas emissions to conduct the drift checks. Introduce the zero and calibration gases at the calibration valve assembly and verify that the appropriate gas flow rate and pressure are present at the FIA. Record the measurement system responses to the zero and calibration gases. The performance of the system is acceptable if the difference between the drift check measurement and the value obtained in Section 7.1 is less than 3 percent of the span value. Alternatively, recalibrate the FIA as in section 7.1 and report the results using both sets of calibration data (i.e., data determined prior to the test period and data determined following the test period). The data that results in the lowest CE value shall be reported as the results for the test run. Conduct a system drift check at the end of each run.

7.3 **System Check.** Inject the high-range calibration gas at the inlet of the sampling probe and record the response. The performance of the system is acceptable if the measurement system response is within 5 percent of the value obtained in Section 7.1 for the high-range calibration gas. Conduct a system check before each test run.

8. PROCEDURE

8.1 **Determination of Volumetric Flow Rate of Uncaptured Emissions**

8.1.1 Locate all points where emissions uncaptured emissions are exhausted from the TTE. Using Method 1, determine the sampling points. Be sure to check each site for cyclonic or swirling flow.

8.1.2 Measure the velocity at each sampling site at least once every hour during each sampling run using Method 2 or 2A.

8.2 **Determination of VOC Content of Uncaptured Emissions**

8.2.1 **Analysis Duration.** Measure the VOC responses at each uncaptured emission point during the entire test run or, if applicable, while the process is operating. If there are multiple emission locations, design a sampling system to allow a single FIA to be used to determine the VOC responses at all sampling locations.

8.2.2 **Gas VOC Concentration.**

8.2.2.1 Assemble the sample train as shown in Figure 204D-1. Calibrate the FIA and conduct a system check according to the procedures in Sections 7.1 and 7.3, respectively.

8.2.2.2 Install the sample probe so that the probe is centrally located in the stack, pipe, or duct, and is sealed tightly at the stack port connection.

8.2.2.3 Inject zero gas at the calibration valve assembly. Allow the measurement system response to reach zero. Measure the system response time as the time required for the system to reach the effluent concentration after the calibration valve has been returned to the effluent sampling position.

8.2.2.4 Conduct a system check before, and a system drift check after, each sampling run according to the procedures in Sections 7.2 and 7.3. If the drift check following a run indicates unacceptable performance (see Section 7.3), the run is not valid. Alternatively, recalibrate the FIA as in section 7.1 and report the results using both sets of calibration data (i.e., data determined prior tot he test period and data determined following the test period). The data that results in the lowest CE value shall be reported as the results for the test run. The tester may elect to perform system drift checks during the run not to exceed one drift check per hour.

8.2.2.5 Verify that the sample lines, filter, and pump temperatures are 120 ± 5 °C.

8.2.2.6 Begin sampling at the start of the test period and continue to sample during the entire run. Record the starting and ending times and any required process information, as appropriate. If multiple emission locations are sampled using a single FIA, sample at each location for the same amount of time (e.g., 2 min.) and continue to switch from one location to another for the entire test run. Be sure that total sampling time at each location is the same at the end of the test run. Collect at least four separate measurements from each sample point during each hour of testing. Disregard the response measurements at each sampling location until 2 times the response time of the measurement system has elapsed. Continue sampling for at least 1 minute and record the concentration measurements.

8.2.3 **Background Concentration.**

8.2.3.1 Locate all natural draft openings (NDO's) of the TTE. A sampling point shall be at the center of each NDO, unless otherwise approved by the Administrator. If there are more than six NDO's, choose six sampling points evenly spaced among the NDO's.

8.2.3.2 Assemble the sample train as shown in Figure 204D-2. Calibrate the FIA and conduct a system check according to the procedures in Sections 7.1 and 7.3.

8.2.3.3 Position the probe at the sampling location.

8.2.3.4 Determine the response time, conduct the system check, and sample according to the procedures described in Sections 8.2.2.3 through 8.2.2.6.

8.2.4 **Alternative Procedure.** The direct interface sampling and analysis procedure described in Section 7.2 of Method 18 may be used to determine the gas VOC concentration. The system must be designed to collect and analyze at least one sample every 10 minutes. If the alternative procedure is used to determine the VOC concentration of the uncaptured emissions in a gas/gas protocol, it must also be used to determine the VOC concentration of the captured emissions. If a tester wishes to conduct a liquid/gas protocol using a gas chromatograph, the tester must use Method 204F for the liquid steam. A gas chromatograph is not an acceptable alternative to the FIA in Method 204A.

9. DATA ANALYSIS AND CALCULATIONS

9.1 Nomenclature

$\mathbf{A_i}$ = area of NDO i, ft^2.

$\mathbf{A_N}$ = total area of all NDO's in the enclosure, ft^2.

$\mathbf{C_{Bi}}$ = corrected average VOC concentration of background emissions at point i, ppm propane.

$\mathbf{C_B}$ = average background concentration, ppm propane.

$\mathbf{C_{DH}}$ = average measured concentration for the drift check calibration gas, ppm propane.

$\mathbf{C_{DO}}$ = average system drift check concentration for zero concentration gas, ppm propane.

$\mathbf{C_{Fj}}$ = corrected average VOC concentration of uncaptured emissions at point j, ppm propane.

$\mathbf{C_H}$ = actual concentration of the drift check calibration gas, ppm propane.

$\mathbf{C_i}$ = uncorrected average background VOC concentration at point i, ppm propane.

$\mathbf{C_j}$ = uncorrected average VOC concentration measured at point j, ppm propane.

F = total VOC content of uncaptured emissions, kg.

$\mathbf{K_1}$ = 1.830×10^{-6} kg/(m^3-ppm).

n = number of measurement points.

$\mathbf{Q_{Fj}}$ = average effluent volumetric flow rate corrected to standard conditions at uncaptured emissions point j, m^3/min.

θ_F = total duration of uncaptured emissions sampling run, min.

9.2 Calculations

9.2.1 Total VOC Fugitive Emissions.

$$F = \sum_{j=1}^{n} \left(C_{Fj} - C_B\right) Q_{Fj} \theta_F K_1 \qquad \textbf{Eq. 204D-1}$$

9.2.2 VOC Concentration of the Uncaptured Emissions at Point j.

$$C_{Fj} = \left(C_{j} - C_{DO}\right)\frac{C_H}{C_{DH} - C_{DO}}$$ **Eq. 204D-2**

9.2.3 **Background VOC Concentration at Point I.**

$$C_{Bi} = \left(C_i - C_{DO}\right)\frac{C_H}{C_{DH} - C_{DO}}$$ **Eq. 204D-3**

9.2.4 **Average Background Concentration.**

$$C_B = \frac{\sum_{i=1}^{n} C_{Bi} A_i}{A_N}$$ **Eq. 204D-4**

NOTE: If the concentration at each point is within 20 percent of the average concentration of all points, use the arithmetic average.

10. **METHOD PERFORMANCE.**

The measurement uncertainties are estimated for each uncaptured emission point as follows: Q_{Fj} = ±5.5 percent and C_{Fj} = ±5.0 percent. Based on these numbers, the probable uncertainty for F is estimated at about ±7.4 percent.

11. **DIAGRAMS**

(See following pages)

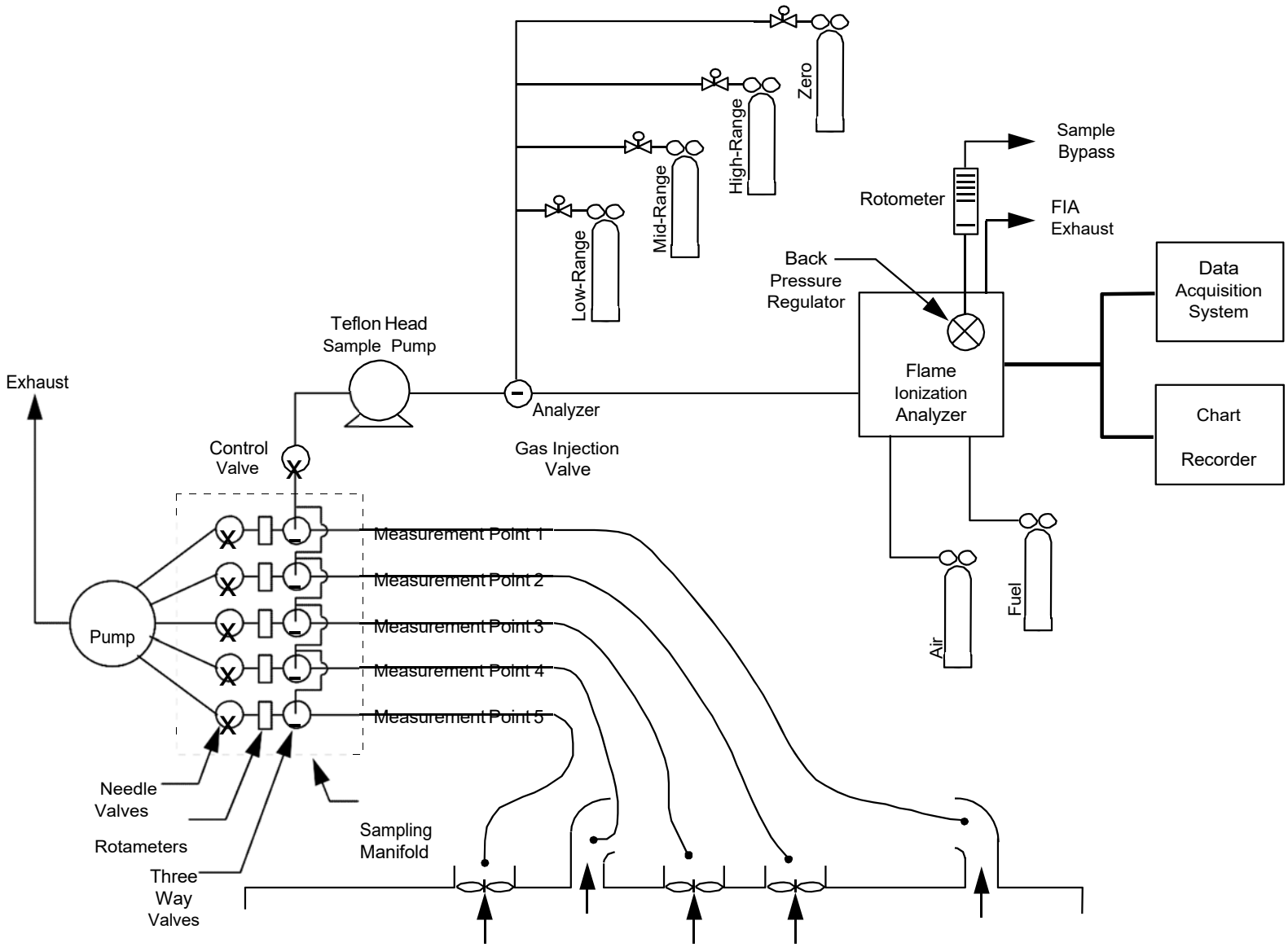

Figure 204D-1. Fugitive emissions measurement system.

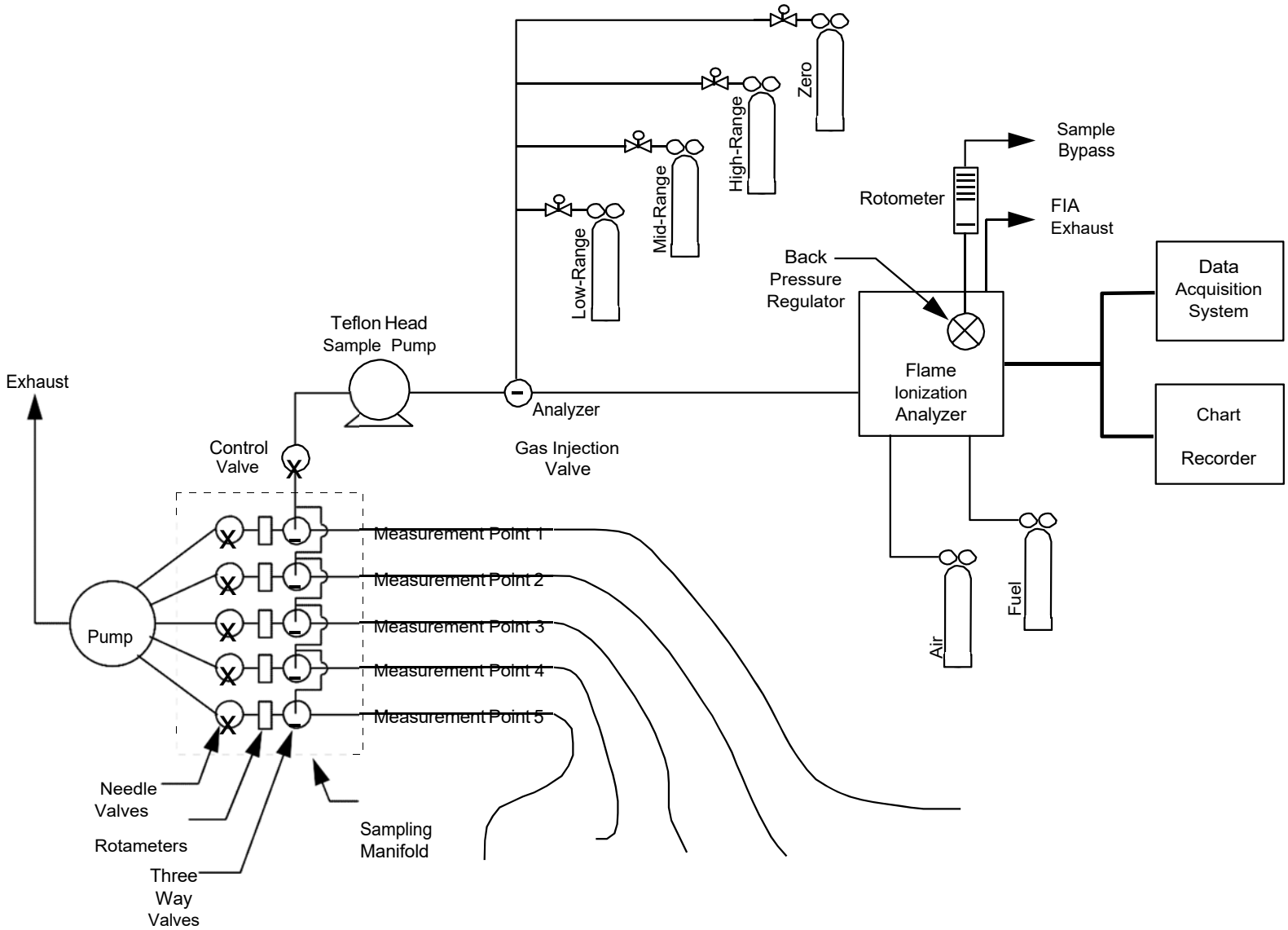

Figure 204D-2. Background measurement system.

METHOD 204E--VOLATILE ORGANIC COMPOUNDS EMISSIONS IN UNCAPTURED STREAM FROM BUILDING ENCLOSURE

1. SCOPE AND APPLICATION

1.1 **Applicability.** This procedure is applicable for determining the uncaptured volatile organic compounds (VOC) emissions from a building enclosure (BE). It is intended to be used in the development of liquid/gas or gas/gas protocols for determining VOC capture efficiency (CE) for surface coating and printing operations.

1.2 **Principle.** The total amount of uncaptured VOC emissions (F_B) from the BE is calculated as the sum of the products of the VOC content (C_{Fj}) of each uncaptured emissions point, the flow rate (Q_{Fj}) at each uncaptured emissions point, and time (θ_F).

1.3 **Sampling Requirements.** A CE test shall consist of at least three sampling runs. Each run shall cover at least one complete production cycle, but shall be at least 3 hours long. The sampling time for each run need not exceed 8 hours, even if the production cycle has not been completed. Alternative sampling times may be used with the approval of the Administrator.

2. SUMMARY OF METHOD

A gas sample is extracted from the uncaptured exhaust duct of a BE through a heated sample line and, if necessary, a glass fiber filter to a flame ionization analyzer (FIA).

3. SAFETY

Because this procedure is often applied in highly explosive areas, caution and care should be exercised in choosing, installing, and using the appropriate equipment.

4. EQUIPMENT AND SUPPLIES

Mention of trade names or company products does not constitute endorsement. All gas concentrations (percent, ppm) are by volume, unless otherwise noted.

4.1 **Gas VOC Concentration.** A schematic of the measurement system is shown in Figure 204E-1. The main components are as follows:

4.1.1 **Sample Probe.** Stainless steel or equivalent. The probe shall be heated to prevent VOC condensation.

4.1.2 **Calibration Valve Assembly.** Three-way valve assembly at the outlet of the sample probe to direct the zero and calibration gases to the analyzer. Other methods, such as quick-connect lines, to route calibration gases to the outlet of the sample probe are acceptable.

4.1.3 **Sample Line.** Stainless steel or Teflon tubing to transport the sample gas to the analyzer. The sample line must be heated to prevent condensation.

4.1.4 **Sample Pump.** A leak-free pump, to pull the sample gas through the system at a flow rate sufficient to minimize the response time of the measurement system. The components of the pump that contact the gas stream shall be constructed of stainless steel or Teflon. The sample pump must be heated to prevent condensation.

4.1.5 **Sample Flow Rate Control.** A sample flow rate control valve and rotameter, or equivalent, to maintain a constant sampling rate within 10 percent. The flow rate control valve and rotameter must be heated to prevent condensation. A control valve may also be located on the sample pump bypass loop to assist in controlling the sample pressure and flow rate.

4.1.6 **Sample Gas Manifold.** Capable of diverting a portion of the sample gas stream to the FIA, and the remainder to the bypass discharge vent. The manifold components shall be constructed of stainless steel or Teflon. If emissions are to be measured at multiple locations, the measurement system shall be designed to use separate sampling probes, lines, and pumps for each measurement location, and a common sample gas manifold and FIA. The sample gas manifold must be heated to prevent condensation.

4.1.7 **Organic Concentration Analyzer.** An FIA with a span value of 1.5 times the expected concentration as propane; however, other span values may be used if it can be demonstrated to the Administrator's satisfaction that they would provide equally accurate measurements. The system shall be capable of meeting or exceeding the following specifications:

4.1.7.1 **Zero Drift.** Less than ±3.0 percent of the span value.

4.1.7.2 **Calibration Drift.** Less than ±3.0 percent of the span value.

4.1.7.3 **Calibration Error.** Less than ±5.0 percent of the calibration gas value.

4.1.7.4 **Response Time.** Less than 30 seconds.

4.1.8 **Integrator/Data Acquisition System.** An analog or digital device or computerized data acquisition system used to integrate the FIA response or compute the average response and record measurement data. The minimum data sampling frequency for computing average or integrated values is one measurement value every 5 seconds. The device shall be capable of recording average values at least

once per minute.

4.2 **Uncaptured Emissions Volumetric Flow Rate.**

4.2.1 **Flow Direction Indicators.** Any means of indicating inward or outward flow, such as light plastic film or paper streamers, smoke tubes, filaments, and sensory perception.

4.2.2 **Method 2 or 2A Apparatus.** For determining volumetric flow rate. Anemometers or similar devices calibrated according to the manufacturer's instructions may be used when low velocities are present. Vane anemometers (Young-maximum response propeller), specialized pitots with electronic manometers (e.g., Shortridge Instruments Inc., Airdata Multimeter 860) are commercially available with measurement thresholds of 15 and 8 mpm (50 and 25 fpm), respectively.

4.2.3 **Method 3 Apparatus and Reagents.** For determining molecular weight of the gas stream. An estimate of the molecular weight of the gas stream may be used if approved by the Administrator.

4.2.4 **Method 4 Apparatus and Reagents.** For determining moisture content, if necessary.

4.3 **Building Enclosure.** The criteria for an acceptable BE are specified in Method 204.

5. **REAGENTS AND STANDARDS**

5.1 **Calibration and Other Gases.** Gases used for calibration, fuel, and combustion air (if required) are contained in compressed gas cylinders. All calibration gases shall be traceable to National Institute of Standards and Technology standards and shall be certified by the manufacturer to ±1 percent of the tag value. Additionally, the manufacturer of the cylinder should provide a recommended shelf life for each calibration gas cylinder over which the concentration does not change more than ±2 percent from the certified value. For calibration gas values not generally available, dilution systems calibrated using Method 205 may be used. Alternative methods for preparing calibration gas mixtures may be used with the approval of the Administrator.

5.1.1 **Fuel.** The FIA manufacturer's recommended fuel should be used. A 40 percent H_2/60 percent He or 40 percent H_2/60 percent N_2 gas mixture is recommended to avoid an oxygen synergism effect that reportedly occurs when oxygen concentration varies significantly from a mean value. Other mixtures may; be used provided the tester can demonstrate to the Administrator that there is no oxygen synergism effect.

5.1.2 **Carrier Gas.** High purity air with less than 1 ppm of organic

material (propane or carbon equivalent) or less than 0.1 percent of the span value, whichever is greater.

5.1.3 **FIA Linearity Calibration Gases.** Low-, mid-, and high-range gas mixture standards with nominal propane concentrations of 20-30, 45-55, and 70-80 percent of the span value in air, respectively. Other calibration values and other span values may be used if it can be shown to the Administrator's satisfaction that more accurate measurements would be achieved.

5.2 **Particulate Filter.** An in-stack or an out-of-stack glass fiber filter is recommended if exhaust gas particulate loading is significant. An out-of-stack filter must be heated to prevent any condensation unless it can be demonstrated that no condensation occurs.

6. QUALITY CONTROL

6.1 Required instrument quality control parameters are found in the following sections:

6.1.1 The FIA system must be calibrated as specified in Section 7.1.

6.1.2 The system drift check must be performed as specified in Section 7.2.

6.1.3 The system check must be conducted as specified in Section 7.3.

6.2 **Audits.**

6.2.1 **Analysis Audit Procedure.** Immediately before each test, analyze an audit cylinder as described in Section 7.2. The analysis audit must agree with the audit cylinder concentration within 10 percent.

6.2.2 **Audit Samples and Audit Sample Availability.** Audit samples will be supplied only to enforcement agencies for compliance tests. The availability of audit samples may be obtained by writing:

Source Test Audit Coordinator (STAC) (MD-77B)
Quality Assurance Division
Atmospheric Research and Exposure Assessment Laboratory
U.S. Environmental Protection Agency
Research Triangle Park, NC 27711

or by calling the STAC at (919) 541-7834. The request for the audit sample must be made at least 30 days prior to the scheduled compliance sample analysis.

6.2.3 **Audit Results.** Calculate the audit sample concentration according to the calculation procedure described in the audit

instructions included with the audit sample. Fill in the audit sample concentration and the analyst's name on the audit response form included with the audit instructions. Send one copy to the EPA Regional Office or the appropriate enforcement agency, and a second copy to the STAC. The EPA Regional Office or the appropriate enforcement agency will report the results of the audit to the laboratory being audited. Include this response with the results of the compliance samples in relevant reports to the EPA Regional Office or the appropriate enforcement agency.

7. CALIBRATION AND STANDARDIZATION

7.1 **FIA Calibration and Linearity Check.** Make necessary adjustments to the air and fuel supplies for the FIA and ignite the burner. Allow the FIA to warm up for the period recommended by the manufacturer. Inject a calibration gas into the measurement system and adjust the back-pressure regulator to the value required to achieve the flow rates specified by the manufacturer. Inject the zero- and the high-range calibration gases, and adjust the analyzer calibration to provide the proper responses. Inject the low- and mid-range gases and record the responses of the measurement system. The calibration and linearity of the system are acceptable if the responses for all four gases are within 5 percent of the respective gas values. If the performance of the system is not acceptable, repair or adjust the system and repeat the linearity check. Conduct a calibration and linearity check after assembling the analysis system and after a major change is made to the system.

7.2 **Systems Drift Checks.** Select the calibration gas that most closely approximates the concentration of the captured emissions for conducting the drift checks. Introduce the zero and calibration gases at the calibration valve assembly and verify that the appropriate gas flow rate and pressure are present at the FIA. Record the measurement system responses to the zero and calibration gases. The performance of the system is acceptable if the difference between the drift check measurement and the value obtained in Section 7.1 is less than 3 percent of the span value. Alternatively, recalibrate the FIA as in section 7.1 and report the results using both sets of calibration data (i.e., data determined prior to the test period and data determined following the test period). The data that results in the lowest CE value shall be reported as the results for the test run. Conduct a system drift check at the end of each run.

7.3 **System Check.** Inject the high-range calibration gas at the inlet of the sampling probe and record the response. The performance of the system is acceptable if the measurement system response is within 5 percent of the value obtained in Section 7.1 for the high-range calibration gas. Conduct a system check before each test run.

8. PROCEDURE

8.1 **Preliminary Determinations.** The following points are considered exhaust points and should be measured for volumetric flow rates and VOC concentrations:

8.1.1 **Forced Draft Openings.** Any opening in the facility with an exhaust fan. Determine the volumetric flow rate according to Method 2.

8.1.2 **Roof Openings.** Any openings in the roof of a facility which does not contain fans are considered to be exhaust points. Determine volumetric flow rate from these openings. Use the appropriate velocity measurement devices (e.g., propeller anemometers).

8.2 **Determination of Flow Rates.**

8.2.1 Measure the volumetric flow rate at all locations identified as exhaust points in Section 8.1. Divide each exhaust opening into nine equal areas for rectangular openings and into eight equal areas for circular openings.

8.2.2 Measure the velocity at each site at least once every hour during each sampling run using Method 2 or 2A, if applicable, or using the low velocity instruments in Section 4.2.2.

8.3 **Determination of VOC Content of Uncaptured Emissions**

8.3.1 **Analysis Duration.** Measure the VOC responses at each uncaptured emissions point during the entire test run or, if applicable, while the process is operating. If there are multiple emissions locations, design a sampling system to allow a single FIA to be used to determine the VOC responses at all sampling locations.

8.3.2 **Gas VOC Concentration.**

8.3.2.1 Assemble the sample train as shown in Figure 204E-1. Calibrate the FIA and conduct a system check according to the procedures in Sections 7.1 and 7.3, respectively.

8.3.2.2 Install the sample probe so that the probe is centrally located in the stack, pipe, or duct, and is sealed tightly at the stack port connection.

8.3.2.3 Inject zero gas at the calibration valve assembly. Allow the measurement system response to reach zero. Measure the system response time as the time required for the system to reach the effluent concentration after the calibration valve has been

returned to the effluent sampling position.

8.3.2.4 Conduct a system check before, and a system drift check after, each sampling run according to the procedures in Sections 7.2 and 7.3. If the drift check following a run indicates unacceptable performance (see Section 7.3), the run is not valid. Alternatively, recalibrate the FIA as in section 7.1 and report the results using both sets of calibration data (i.e., data determined prior to the test period and data determined following the test period). The data that results in the lowest CE value shall be reported as the results for the test run. The tester may elect to perform drift checks during the run, not to exceed one drift check per hour.

8.3.2.5 Verify that the sample lines, filter, and pump temperatures are 120 ± 5 °C.

8.3.2.6 Begin sampling at the start of the test period and continue to sample during the entire run. Record the starting and ending times, and any required process information, as appropriate. If multiple emission locations are sampled using a single FIA, sample at each location for the same amount of time (e.g., 2 minutes) and continue to switch from one location to another for the entire test run. Be sure that total sampling time at each location is the same at the end of the test run. Collect at least four separate measurements from each sample point during each hour of testing. Disregard the response measurements at each sampling location until 2 times the response time of the measurement system has elapsed. Continue sampling for at least 1 minute, and record the concentration measurements.

8.4 **Alternative Procedure.** The direct interface sampling and analysis procedure described in Section 7.2 of Method 18 may be used to determine the gas VOC concentration. The system must be designed to collect and analyze at least one sample every 10 minutes. If the alternative procedure is used to determine the VOC concentration of the uncaptured emissions in a gas/gas protocol, it must also be used to determine the VOC concentration of the captured emissions. If a tester wishes to conduct a liquid/gas protocol using a gas chromatograph, the tester must use Method 204F for the liquid steam. A gas chromatograph is not an acceptable alternative to the FIA in Method 204A.

9. DATA ANALYSIS AND CALCULATIONS

9.1 Nomenclature

C_{DH} = average measured concentration for the drift check calibration gas, ppm propane.

C_{DO} = average system drift check concentration for zero concentration gas, ppm propane.

C_{Fj} = corrected average VOC concentration of uncaptured emissions at point j, ppm propane.

C_H = actual concentration of the drift check calibration gas, ppm propane.

C_j = uncorrected average VOC concentration measured at point j, ppm propane.

F_B = total VOC content of uncaptured emissions from the building, kg.

K_1 = 1.830×10^{-6} kg/(m^3-ppm).

n = number of measurement points.

Q_{Fj} = average effluent volumetric flow rate corrected to standard conditions at uncaptured emissions point j, m^3/min.

θ_F = total duration of CE sampling run, min.

9.2 **Calculations**

9.2.1 **Total VOC Uncaptured Emissions from the Building.**

$$F_B = \sum_{j=1}^{n} C_{Fj} Q_{Fj} \theta_F K_1 \qquad \textbf{Eq. 204E-1}$$

9.2.2 **VOC Concentration of the Uncaptured Emissions at Point j.**

$$C_{Fj} = \left(C_j - C_O\right) \frac{C_H}{C_{DH} - C_{DO}} \qquad \textbf{Eq. 204E-2}$$

10. **METHOD PERFORMANCE.**

The measurement uncertainties are estimated for each uncaptured emissions point as follows: Q_{Fj} = ±10.0 percent and C_{Fj} = ±5.0 percent. Based on these numbers, the probable uncertainty for F_B is estimated at about ±11.2 percent.

11. **DIAGRAMS**

(See following page)

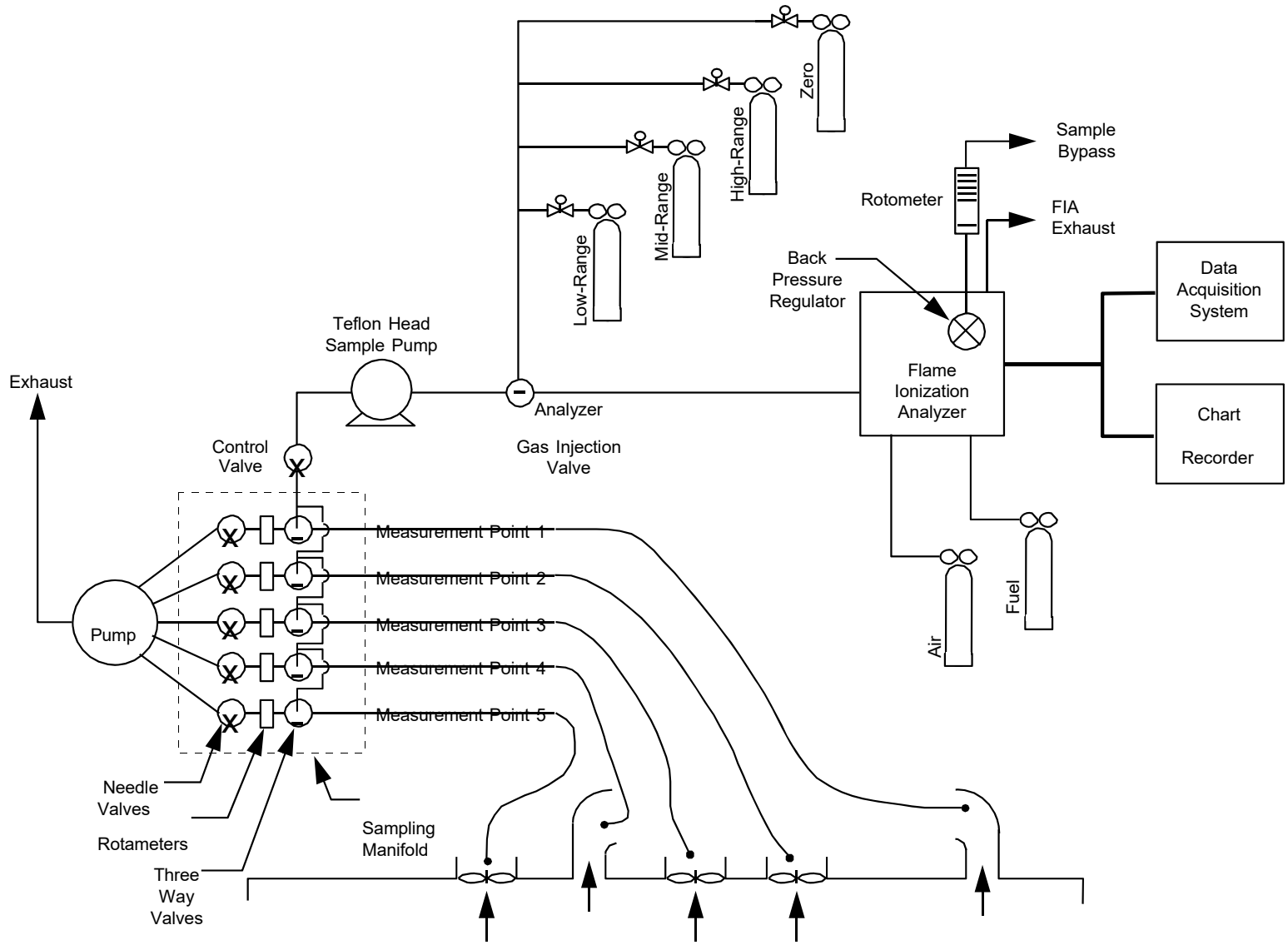

Figure 204E-1. Fugitive emissions measurement system.

METHOD 204F--VOLATILE ORGANIC COMPOUNDS CONTENT IN LIQUID INPUT STREAM (DISTILLATION APPROACH)

1. INTRODUCTION

1.1 **Applicability.** This procedure is applicable for determining the input of volatile organic compounds (VOC). It is intended to be used as a segment in the development of liquid/gas protocols for determining VOC capture efficiency (CE) for surface coating and printing operations.

1.2 **Principle.** The amount of VOC introduced to the process (L) is the sum of the products of the weight (W) of each VOC containing liquid (ink, paint, solvent, etc.) used, and its VOC content (V), corrected for a response factor (RF).

1.3 **Sampling Requirements.** A CE test shall consist of at least three sampling runs. Each run shall cover at least one complete production cycle, but shall be at least 3 hours long. The sampling time for each run need not exceed 8 hours, even if the production cycle has not been completed. Alternative sampling times may be used with the approval of the Administrator.

2. SUMMARY OF METHOD

A sample of each coating used is distilled to separate the VOC fraction. The distillate is used to prepare a known standard for analysis by an flame ionization analyzer (FIA), calibrated against propane, to determine its RF.

3. SAFETY

Because this procedure is often applied in highly explosive areas, caution and care should be exercised in choosing, installing, and using the appropriate equipment.

4. EQUIPMENT AND SUPPLIES

Mention of trade names or company products does not constitute endorsement. All gas concentrations (percent, ppm) are by volume, unless otherwise noted.

4.1 **Liquid Weight.**

4.1.1 **Balances/Digital Scales.** To weigh drums of VOC containing liquids to within 0.2 lb or 1.0 percent of the total weight of VOC liquid used.

4.1.2 **Volume Measurement Apparatus (Alternative).** Volume meters, flow meters, density measurement equipment, etc., as needed to achieve the same accuracy as direct weight measurements.

4.2 **Response Factor Determination (FIA Technique).** The VOC

Distillation system and Tedlar gas bag generation system apparatuses are shown in Figures 204F-1 and 204F-2, respectively. The following equipment is required:

4.2.1 **Sample Collection Can.** An appropriately-sized metal can to be used to collect VOC containing materials. The can must be constructed in such a way that it can be grounded to the coating container.

4.2.2 **Needle Valves.** To control gas flow.

4.2.3 **Regulators.** For calibration, dilution, and sweep gas cylinders.

4.2.4 **Tubing and Fittings.** Teflon and stainless steel tubing and fittings with diameters, lengths, and sizes determined by the connection requirements of the equipment.

4.2.5 **Thermometer.** Capable of measuring the temperature of the hot water and oil baths to within 1 °C.

4.2.6 **Analytical Balance.** To measure ±0.01 mg.

4.2.7 **Microliter Syringe.** 10-µl size.

4.2.8 **Vacuum Gauge or Manometer.** 0- to 760-mm (0- to 30-in.) Hg U-Tube manometer or vacuum gauge.

4.2.9 **Hot Oil Bath, With Stirring Hot Plate.** Capable of heating and maintaining a distillation vessel at 110 ±3 °C.

4.2.10 **Ice Water Bath.** To cool the distillation flask.

4.2.11 **Vacuum/Water Aspirator.** A device capable of drawing a vacuum to within 20 mm Hg from absolute.

4.2.12 **Rotary Evaporator System.** Complete with folded inner coil, vertical style condenser, rotary speed control, and Teflon sweep gas delivery tube with valved inlet. Buchi Rotavapor or equivalent.

4.2.13 **Ethylene Glycol Cooling/Circulating Bath.** Capable of maintaining the condenser coil fluid at -10 °C.

4.2.14 **Dry Gas Meter (DGM).** Capable of measuring the dilution gas volume within 2 percent, calibrated with a spirometer or bubble meter, and equipped with a temperature gauge capable of measuring temperature within 3 °C.

4.2.15 **Activated Charcoal/Mole Sieve Trap.** To remove any trace level of organics picked up from the DGM.

4.2.16 **Gas Coil Heater.** Sufficient length of 0.125-inch stainless steel tubing to allow heating of the dilution gas to near the

water bath temperature before entering the volatilization vessel.

4.2.17 **Water Bath, With Stirring Hot Plate.** Capable of heating and maintaining a volatilization vessel and coil heater at a temperature of 100 ± 5 °C.

4.2.18 **Volatilization Vessel.** 50-ml midget impinger fitted with a septum top and loosely filled with glass wool to increase the volatilization surface.

4.2.19 **Tedlar Gas Bag.** Capable of holding 30 liters of gas, flushed clean with zero air, leak tested, and evacuated.

4.2.20 **Organic Concentration Analyzer.** An FIA with a span value of 1.5 times the expected concentration as propane; however, other span values may be used if it can be demonstrated that they would provide equally accurate measurements. The FIA instrument should be the same instrument used in the gaseous analyses adjusted with the same fuel, combustion air, and sample back-pressure (flow rate) settings. The system shall be capable of meeting or exceeding the following specifications:

4.2.20.1 **Zero Drift.** Less than ±3.0 percent of the span value.

4.2.20.2 **Calibration Drift.** Less than ±3.0 percent of the span value.

4.2.20.3 **Calibration Error.** Less than ±3.0 percent of the calibration gas value.

4.2.21 **Integrator/Data Acquisition System.** An analog or digital device or computerized data acquisition system used to integrate the FIA response or compute the average response and record measurement data. The minimum data sampling frequency for computing average or integrated value is one measurement value every 5 seconds. The device shall be capable of recording average values at least once per minute.

4.2.22 **Chart Recorder (Optional).** A chart recorder or similar device is recommended to provide a continuous analog display of the measurement results during the liquid sample analysis.

5. REAGENTS AND STANDARDS

5.1 **Zero Air.** High purity air with less than 1 ppm of organic material (as propane) or less than 0.1 percent of the span value, whichever is greater. Used to supply dilution air for making the Tedlar bag gas samples.

5.2 **THC Free N_2.** High purity N_2 with less than 1 ppm THC. Used as sweep gas in the rotary evaporator system.

5.3 **Calibration and Other Gases.** Gases used for calibration, fuel, and combustion air (if required) are contained in compressed gas cylinders. All calibration gases shall be traceable to National Institute of Standards and Technology standards and shall be certified by the manufacturer to ±1 percent of the tag value. Additionally, the manufacturer of the cylinder should provide a recommended shelf life for each calibration gas cylinder over which the concentration does not change more than ±2 percent from the certified value. For calibration gas values not generally available, dilution systems calibrated using Method 205 may be used. Alternative methods for preparing calibration gas mixtures may be used with prior approval of the Administrator.

5.3.1 **Fuel.** The FIA manufacturer's recommended fuel should be used. A mixture of 40 percent H_2/60 percent He, or 40 percent H_2/60 percent N_2 is recommended to avoid fuels with oxygen to avoid an oxygen synergism effect that reportedly occurs when oxygen concentration varies significantly from a mean value. Other mixtures may be used provided the tester can demonstrate to the Administrator that there is no oxygen synergism effect.

5.3.2 **Combustion Air.** High purity air with less than 1 ppm of organic material (as propane) or less than 0.1 percent of the span value, whichever is greater.

5.3.3 **FIA Linearity Calibration Gases.** Low-, mid-, and high-range gas mixture standards with nominal propane concentration of 20-30, 45-55, and 70-80 percent of the span value in air, respectively. Other calibration values and other span values may be used if it can be shown that equally accurate measurements would be achieved.

5.3.4 **System Calibration Gas.** Gas mixture standard containing propane in air, approximating the VOC concentration expected for the Tedlar gas bag samples.

6. QUALITY CONTROL

6.1 Required instrument quality control parameters are found in the following sections:

6.1.1 The FIA system must be calibrated as specified in Section 7.1.

6.1.2 The system drift check must be performed as specified in Section 7.2.

6.2 **Precision Control.** A minimum of one sample in each batch must be distilled and analyzed in duplicate as a precision control. If the

results of the two analyses differ by more than ±10 percent of the mean, then the system must be reevaluated and the entire batch must be re-distilled and analyzed.

6.3 **Audits.**

6.3.1 **Audit Procedure.** Concurrently, analyze the audit sample and a set of compliance samples in the same manner to evaluate the technique of the analyst and the standards preparation. The same analyst, analytical reagents, and analytical system shall be used both for compliance samples and the EPA audit sample. If this condition is met, auditing of subsequent compliance analyses for the same enforcement agency within 30 days is not required. An audit sample set may not be used to validate different sets of compliance samples under the jurisdiction of different enforcement agencies, unless prior arrangements are made with both enforcement agencies.

6.3.2 **Audit Samples.** Audit Sample Availability. Audit samples will be supplied only to enforcement agencies for compliance tests. The availability of audit samples may be obtained by writing:

Source Test Audit Coordinator (STAC) (MD-77B)
Quality Assurance Division
Atmospheric Research and Exposure Assessment Laboratory
U.S. Environmental Protection Agency
Research Triangle Park, NC 27711

or by calling the STAC at (919) 541-7834. The request for the audit sample must be made at least 30 days prior to the scheduled compliance sample analysis.

6.3.3 **Audit Results.** Calculate the audit sample concentration according to the calculation procedure described in the audit instructions included with the audit sample. Fill in the audit sample concentration and the analyst's name on the audit response form included with the audit instructions. Send one copy to the EPA Regional Office or the appropriate enforcement agency, and a second copy to the STAC. The EPA Regional Office or the appropriate enforcement agency will report the results of the audit to the laboratory being audited. Include this response with the results of the compliance samples in relevant reports to the EPA Regional Office or the appropriate enforcement agency.

7. CALIBRATION AND STANDARDIZATION

7.1 **FIA Calibration and Linearity Check.** Make necessary adjustments to the air and fuel supplies for the FIA and ignite the burner. Allow the FIA to warm up for the period recommended by the manufacturer. Inject a calibration gas into the measurement

system and adjust the back-pressure regulator to the value required to achieve the flow rates specified by the manufacturer. Inject the zero- and the high-range calibration gases and adjust the analyzer calibration to provide the proper responses. Inject the low- and mid-range gases and record the responses of the measurement system. The calibration and linearity of the system are acceptable if the responses for all four gases are within 5 percent of the respective gas values. If the performance of the system is not acceptable, repair or adjust the system and repeat the linearity check. Conduct a calibration and linearity check after assembling the analysis system and after a major change is made to the system. A calibration curve consisting of zero gas and two calibration levels must be performed at the beginning and end of each batch of samples.

7.2 **Systems Drift Checks.** After each sample, repeat the system calibration checks in Section 7.1 before any adjustments to the FIA or measurement system are made. If the zero or calibration drift exceeds ±3 percent of the span value, discard the result and repeat the analysis. Alternatively, recalibrate the FIA as in section 7.1 and report the results using both sets of calibration data (i.e., data determined prior to the test period and data determined following the test period). The data that results in the lowest CE value shall be reported as the results for the test run.

8. PROCEDURES

8.1 Determination of Liquid Input Weight

8.1.1 **Weight Difference.** Determine the amount of material introduced to the process as the weight difference of the feed material before and after each sampling run. In determining the total VOC containing liquid usage, account for:

(a) the initial (beginning) VOC containing liquid mixture;

(b) any solvent added during the test run;

(c) any coating added during the test run; and

(d) any residual VOC containing liquid mixture remaining at the end of the sample run.

8.1.1.1 Identify all points where VOC containing liquids are introduced to the process. To obtain an accurate measurement of VOC containing liquids, start with an empty fountain (if applicable). After completing the run, drain the liquid in the fountain back into the liquid drum (if possible), and weigh the drum again. Weigh the VOC containing liquids to ±0.5 percent of the total weight (full) or ±0.1 percent of the total weight of VOC containing liquid used during the

sample run, whichever is less. If the residual liquid cannot be returned to the drum, drain the fountain into a preweighed empty drum to determine the final weight of the liquid.

8.1.1.2 If it is not possible to measure a single representative mixture, then weigh the various components separately (e.g., if solvent is added during the sampling run, weigh the solvent before it is added to the mixture). If a fresh drum of VOC containing liquid is needed during the run, then weigh both the empty drum and fresh drum.

8.1.2 Volume Measurement (Alternative). If direct weight measurements are not feasible, the tester may use volume meters and flow rate meters (and density measurements) to determine the weight of liquids used if it can be demonstrated that the technique produces results equivalent to the direct weight measurements. If a single representative mixture cannot be measured, measure the components separately.

8.2 Determination of VOC Content in Input Liquids

8.2.1 Collection of Liquid Samples.

8.2.1.1 Collect a 1-pint or larger sample of the VOC containing liquid mixture at each application location at the beginning and end of each test run. A separate sample should be taken of each VOC containing liquid added to the application mixture during the test run. If a fresh drum is needed during the sampling run, then obtain a sample from the fresh drum.

8.2.1.2 When collecting the sample, ground the sample container to the coating drum. Fill the sample container as close to the rim as possible to minimize the amount of headspace.

8.2.1.3 After the sample is collected, seal the container so the sample cannot leak out or evaporate.

8.2.1.4 Label the container to identify clearly the contents.

8.2.2 Distillation of VOC.

8.2.2.1 Assemble the rotary evaporator as shown in Figure 204F-1.

8.2.2.2 Leak check the rotary evaporation system by aspirating a vacuum of approximately 20 mm Hg from absolute. Close up the system and monitor

the vacuum for approximately 1 minute. If the vacuum falls more than 25 mm Hg in 1 minute, repair leaks and repeat. Turn off the aspirator and vent vacuum.

8.2.2.3 Deposit approximately 20 ml of sample (inks, paints, etc.) into the rotary evaporation distillation flask.

8.2.2.4 Install the distillation flask on the rotary evaporator.

8.2.2.5 Immerse the distillate collection flask into the ice water bath.

8.2.2.6 Start rotating the distillation flask at a speed of approximately 30 rpm.

8.2.2.7 Begin heating the vessel at a rate of 2 to 3 °C per minute.

8.2.2.8 After the hot oil bath has reached a temperature of 50°C or pressure is evident on the mercury manometer, turn on the aspirator and **gradually** apply a vacuum to the evaporator to within 20 mm Hg of absolute. Care should be taken to prevent material burping from the distillation flask.

8.2.2.9 Continue heating until a temperature of 110 °C is achieved and maintain this temperature for at least 2 minutes, or until the sample has dried in the distillation flask.

8.2.2.10 Slowly introduce the N_2 sweep gas through the purge tube and into the distillation flask, taking care to maintain a vacuum of approximately 400-mm Hg from absolute.

8.2.2.11 Continue sweeping the remaining solvent VOC from the distillation flask and condenser assembly for 2 minutes, or until all traces of condensed solvent are gone from the vessel. Some distillate may remain in the still head. This will not affect solvent recovery ratios.

8.2.2.12 Release the vacuum, disassemble the apparatus and transfer the distillate to a labeled, sealed vial.

8.2.3 **Preparation of VOC standard bag sample.**

8.2.3.1 Assemble the bag sample generation system as shown in Figure 204F-2 and bring the water

bath up to near boiling temperature.

8.2.3.2 Inflate the Tedlar bag and perform a leak check on the bag.

8.2.3.3 Evacuate the bag and close the bag inlet valve.

8.2.3.4 Record the current barometric pressure.

8.2.3.5 Record the starting reading on the dry gas meter, open the bag inlet valve, and start the dilution zero air flowing into the Tedlar bag at approximately 2 liters per minute.

8.2.3.6 The bag sample VOC concentration should be similar to the gaseous VOC concentration measured in the gas streams. The amount of liquid VOC required can be approximated using equations in Section 9.2. Using Equation 204F- 4, calculate C_{VOC} by assuming RF is 1.0 and selecting the desired gas concentration in terms of propane, C_{C3}. Assuming B_V is 20 liters, M_L, the approximate amount of liquid to be used to prepare the bag gas sample, can be calculated using Equation 204F-2.

8.2.3.7 Quickly withdraw an aliquot of the approximate amount calculated in Section 8.2.3.6 from the distillate vial with the microliter syringe and record its weight from the analytical balance to the nearest 0.01 mg.

8.2.3.8 Inject the contents of the syringe through the septum of the volatilization vessel into the glass wool inside the vessel.

8.2.3.9 Reweigh and record the tare weight of the now empty syringe.

8.2.3.10 Record the pressure and temperature of the dilution gas as it is passed through the dry gas meter.

8.2.3.11 After approximately 20 liters of dilution gas have passed into the Tedlar bag, close the valve to the dilution air source and record the exact final reading on the dry gas meter.

8.2.3.12 The gas bag is then analyzed by FIA within 1 hour of bag preparation in accordance with the procedure in Section 8.2.4.

8.2.4 **Determination of VOC response factor.**

8.2.4.1 Start up the FIA instrument using the same settings as used for the gaseous VOC

measurements.

8.2.4.2 Perform the FIA analyzer calibration and linearity checks according to the procedure in Section 7.1. Record the responses to each of the calibration gases and the back-pressure setting of the FIA.

8.2.4.3 Connect the Tedlar bag sample to the FIA sample inlet and record the bag concentration in terms of propane. Continue the analyses until a steady reading is obtained for at least 30 seconds. Record the final reading and calculate the RF.

8.2.5 **Determination of coating VOC content as VOC (V_{IJ}).**

8.2.5.1 Determine the VOC content of the coatings used in the process using EPA Method 24 or 24A as applicable.

9. DATA ANALYSIS AND CALCULATIONS

9.1 Nomenclature

B_V = Volume of bag sample volume, liters.

C_{C3} = Concentration of bag sample as propane, mg/liter.

C_{VOC} = Concentration of bag sample as VOC, mg/liter.

K = 0.00183 mg propane/(liter-ppm propane)

L = Total VOC content of liquid input, kg propane.

M_L = Mass of VOC liquid injected into the bag, mg.

M_V = Volume of gas measured by DGM, liters.

P_M = Absolute DGM gas pressure, mm Hg.

P_{STD} = Standard absolute pressure, 760 mm Hg.

R_{C3} = FIA reading for bag gas sample, ppm propane.

RF = Response factor for VOC in liquid, weight VOC/weight propane.

RF_J = Response factor for VOC in liquid J, weight VOC/weight propane.

T_M = DGM temperature, °K.

T_{STD} = Standard absolute temperature, 293°K.

$\mathbf{V_{IJ}}$ = Initial VOC weight fraction of VOC liquid J.

$\mathbf{V_{FJ}}$ = Final VOC weight fraction of VOC liquid J.

$\mathbf{V_{AJ}}$ = VOC weight fraction of VOC liquid J added during the run.

$\mathbf{W_{IJ}}$ = Weight of VOC containing liquid J at beginning of run, kg.

$\mathbf{W_{FJ}}$ = Weight of VOC containing liquid J at end of run, kg.

$\mathbf{W_{AJ}}$ = Weight of VOC containing liquid J added during the run, kg.

9.2 **Calculations**

9.2.1 **Bag sample volume.**

$$B_V = \frac{M_V T_{STD} P_M}{T_M P_{STD}}$$ **Eq. 204F-1**

9.2.2 **Bag sample VOC concentration.**

$$C_{VOC} = \frac{M_L}{B_V}$$ **Eq. 204F-2**

9.2.3 **Bag sample VOC concentration as propane.**

$$C_{C_3} = R_{C_3} K$$ **Eq. 204F-3**

9.2.4 **Response Factor.**

$$RF = \frac{C_{VOC}}{C_{C_3}}$$ **Eq. 204F-4**

9.2.5 **Total VOC Content of the Input VOC Containing Liquid.**

$$L = \sum_{j=1}^{n} \frac{V_{Ij} W_{Ij}}{RF_j} - \sum_{j=1}^{n} \frac{V_{Fj} W_{Fj}}{RF_j} + \sum_{j=1}^{n} \frac{V_{Aj} W_{Aj}}{RF_j}$$ **Eq. 204F-5**

10. **DIAGRAMS**

(See following pages)

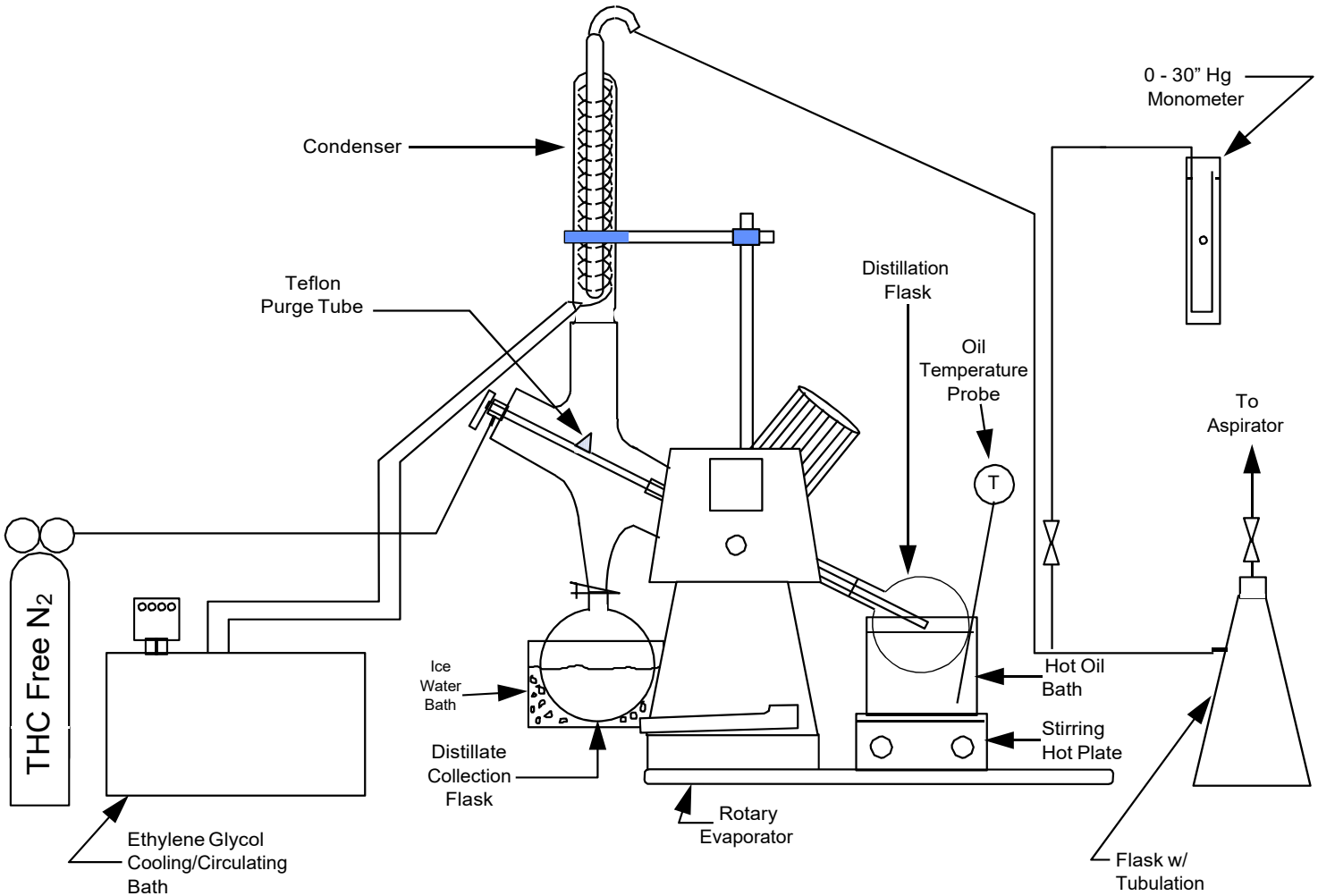

Figure 204F-1. VOC distillation system apparatus.

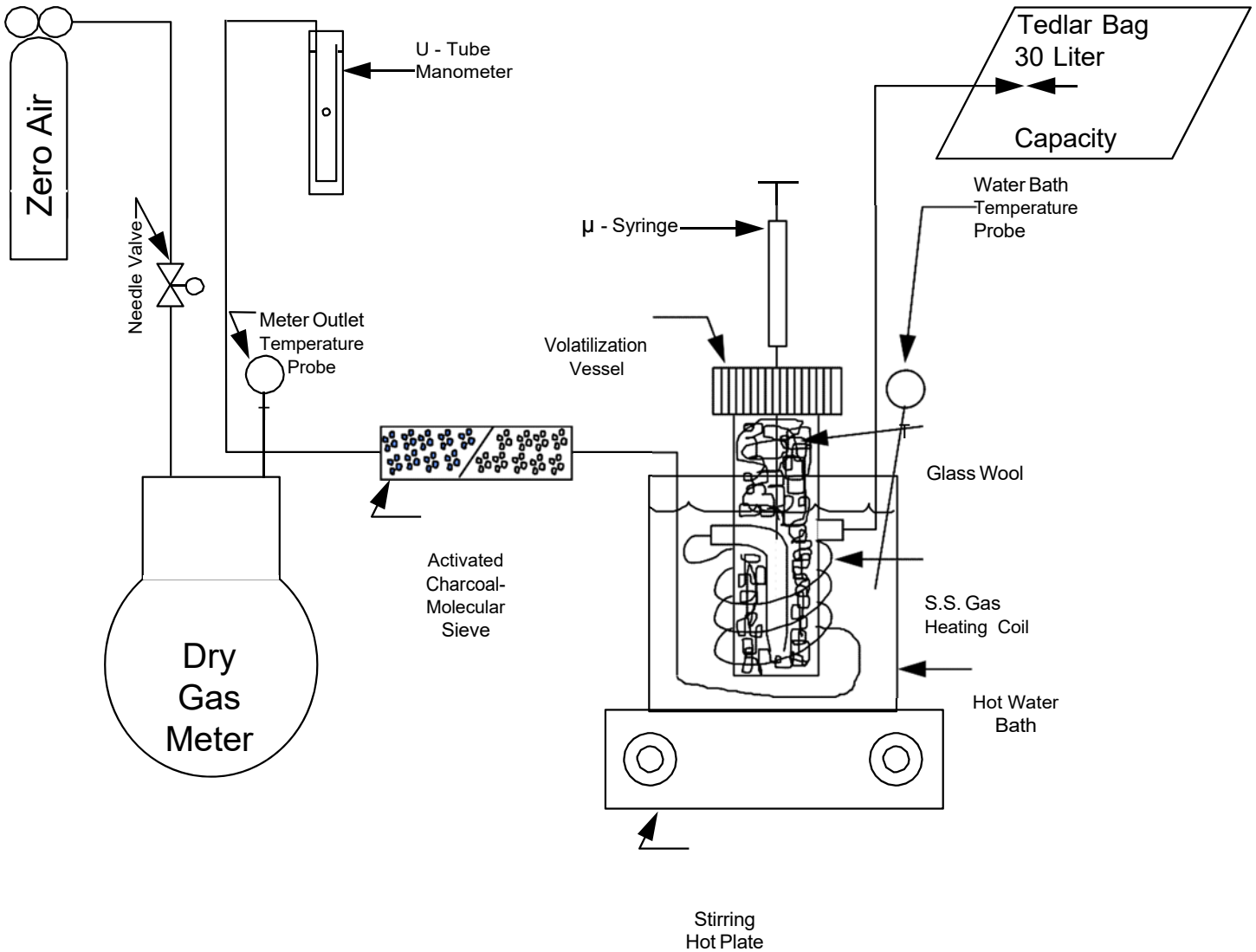

Figure 204F-2. Tedlar gas bag generation system apparatus.

APPENDIX G

Clean Air Act Amendments Of 1990
List Of Hazardous Air Pollutants

Chemical Name	CAS Number
Acetaldehyde	75070
Acetamide	60355
Acetonitrile	75058
Acetophenone	98862
2-Acetylaminofluorene	53963
Acrolein	107028
Acrylamide	79061
Acrylic Acid	79107
Acrylonitrile	107131
Allyl chloride	107051
4-Aminobiphenyl	92671
Aniline	62533
o-Anisidine	90040
Asbestos	1332214
Benzene (includes benzene from gasoline)	71432
Benzidine	92875
Benzotrichloride	98077
Benzyl chloride	100447
Biphenyl	92524
Bis(2-ethylhexyl)phthalate [DEHP]	117817
Bis(chloromethyl)ether	542881
Bromoform	75252
1,3-Butadiene	106990
Calcium cyanamide	156627
Captan	133062
Carbaryl	63252
Carbon disulfide	75150
Carbon tetrachloride	56235
Carbonyl sulfide	463581
Catechol	120809
Chloramben	133904
Chlordane	57749
Chlorine	7782505
Chloroacetic Acid	79118
2-Chloroacetophenone	532274
Chlorobenzene	108907
Chlorobenzilate	510156
Chloroform	67663
Chloromethyl methyl ether	107302
Chloroprene	126998
Cresols/Cresylic acid (isomers and mixtures)	1319773

Chemical Name	CAS Number
o-Cresol	95487
m-cresol	108394
p-cresol	106445
Cumene	98828
2,4-D, salts & esters	94757
DDE	3547044
Diazomethane	334883
Dibenzofurans	132649
1,2-Dibromo-3-chloropropane	96128
Dibutylphthalate	84742
1,4-Dichlorobenzene (p)	106467
3,3-Dichlorobenzidene	91941
Dichlorethylether (Bis(2-chloroethyl)ether)	111444
1,3-Dichloropropene	542756
Dichlorvos	62737
Diethanolamine	111422
N,N-Diethyl aniline (N,N-Dimethylaniline)	121697
Diethyl sulfate	64675
3,3-Dimethoxybenzidene	119904
Dimethyl aminobenzene	60117
3,3-Dimethyl benzidene	119937
Dimethyl carbamoyl chloride	79447
Dimethyl formamide	68122
1,1-Dimethyl hydrazine	57147
Dimethyl phthalate	131113
Dimethyl sulfate	77781
4,6-Dinitro-o-cresol, and salts	534521
2,4-Dinitrophenol	51285
2,4-Dinitrotoluene	121142
1,4-Dioxane (1,4-Diethyleneoxide)	123911
1,2-Diphenylhydrazine	122667
Epichlorohydrin (1-Chloro-2,3-epoxypropane)	106898
1,2-Epoxybutane	106887
Ethyl acrylate	140885
Ethyl benzene	100414
Ethyl carbamate (Urethane)	51796
Ethyl chloride (Chloroethane)	75003
Ethylene dibromide (Dibromoethane)	106934
Ethylene dichloride (1,2-Dichloroethane)	107062
Ethylene glycol	107211
Ethylene imine (Aziridine)	151564
Ethylene oxide	75218
Ethylene thiourea	96457
Ethylidenedichloride (1,1-Dichloroethane)	75343
Formaldehyde	50000

Chemical Name	CAS Number
Heptachlor	76448
Hexachlorobenzene	118741
Hexachlorobutadiene	87683
Hexachlorocyclopentadiene	77474
Hexachloroethane	67721
Hexamethylene-1,6-diisocyanate	822060
Hexamethylphosphoramide	680319
Hexane	110543
Hydrazine	302012
Hydrochloric Acid	7647010
Hydrogen fluoride (Hydrofluoric acid)	7664393
Hydroquinone	123319
Isophorone	78591
Lindane (all isomers)	58899
Maleic anhydride	108316
Methanol	67561
Methoxychlor	72435
Methyl bromide (Bromomethane)	74839
Methyl chloride (Chloromethane)	74873
Methylchloroform (1,1,1-Trichloroethane)	71556
Methyl hydrazine	60344
Methyl iodide (Iodomethane)	74884
Methyl isobutyl ketone (Hexone)	108101
Methyl isocyanate	624839
Methyl methacrylate	80626
Methyl tertiary butyl ether	1634044
4,4-Methylene bis(2-chloroaniline)	101144
Methylene chloride (Dichloromethane)	75092
Methylene diphenyl diisocyanate (MDI)	101688
4,4-Methylenedianiline	101779
Naphthalene	91203
Nitrobenzene	98953
4-Nitrobiphenyl	92933
4-Nitrophenol	100027
2-Nitropropane	79469
N-Nitroso-N-methylurea	684935
N-Nitrosodimethylamine	62759
N-Nitrosomorpholine	59892
Parathion	56382
Pentachloronitrobenzene (Quintobenzene)	82688
Pentachlorophenol	87865
Phenol	108952
p-Phenylenediamine	106503
Phosgene	75445
Phosphine	7803512
Phosphorous	7723140

Chemical Name	CAS Number
Phthalic Anhydride	85449
Polychlorinated biphenyls (Arochlors)	1336363
1,3-Propane sultone	1120714
beta-Propriolactone	57578
Proprionaldehyde	123386
Propoxur (Baygon)	114261
Propylenedichloride (1,2-Dichloropropane)	78875
Propylene oxide	75569
1,2-Propylenimine (2-Methyl aziridine)	75558
Quinoline	91225
Quinone	106514
Styrene	100425
Styrene oxide	96093
2,3,7,8-Tetrachlorodibenzo-p-dioxin	1746016
1,1,2,2-Tetrachloroethane	79345
Tetrachlorethylene (Perchloroethylene)	127184
Titanium tetrachloride	7550450
Toluene	108883
2,4-Toluene diamine	95807
2,4-Toluene diisocyanate	584849
o-Toluidine	95534
Toxaphene (chlorinated Camphene)	8001352
1,2,4-Trichlorobenzene	120821
1,1,2-Trichloroethane	79005
Trichloroethylene	79016
2,4,5-Trichlorophenol	95954
2,4,6-Trichlorophenol	88062
Triethylamine	121448
Trifluralin	1582098
2,2,4-Trimethylpentane	540841
Vinyl acetate	108054
Vinyl bromide	593602
Vinyl chloride	75014
Vinylidenechloride (1,1-Dichloroethylene)	75354
Xylenes (isomers and mixtures)	1330207
o-Xylenes	95476
m-Xylenes	108383
p-Xylenes	106423
Antimony compounds	---
Arsenic compounds (inorganic including arsine)	---
Beryllium compounds	---
Cadmium compounds	---
Chromium compounds	---
Cobalt compounds	---

Chemical Name	CAS Number
Coke oven emissions	---
Cyanide compounds[1]	---
Glycol ethers[2]	---
Lead compounds	---
Manganese compounds	---
Mercury compounds	---
Fine mineral fibers[3]	---
Nickel compounds	---
Polycyclic organic matter[4]	---
Radionuclides (including radon)[5]	---
Selenium Compounds	---

---

[1] X'CN where X = H' or any other group where a formal dissociation may occur. For example, KCN or $Ca(CN)_2$

[2] Includes mono- and di- ethers of ethylene glycol, diethylene glycol, and triethylene glycol $R\text{-}(OCH_2CH_2)n\text{-}OR'$ where:

N = 1, 2, or 3;
R = alkyl C7 or less; or
R = phenyl or alkyl substituted phenyl;
R' = H or alkyl C7 or less; or OR' consisting of carboxylic acid ester, sulfate, phosphate, nitrate, or sulfonate.

The substance ethylene glycol monobutyl ether (EGBE, 2-Butoxyethanol) (CAS Number 111- 76-2) is deleted from the list of hazardous air pollutants.

[3] Includes mineral fiber emissions from facilities manufacturing or processing glass, rock, or slag fibers (or other mineral derived fibers) of average diameter 1 micrometer or less.

[4] Includes organic compounds with more than one benzene ring, and which have a boiling point greater than or equal to 100° C.

[5] A type of atom which spontaneously undergoes radioactive decay.

Note: For all listings above which contain the word "compounds" and for glycol ethers, the following applies: Unless otherwise specified, these listings are defined as including any unique chemical substance that contains the named chemical (i.e., antimony, arsenic, etc.) as part of that chemical's infrastructure.

EXEMPTION CLAIM FORM FOR COFIRED COMBUSTORS

FACILITY INFORMATION

Facility Name: _____

Facility Address: _____

_____

_____

Contact Person Name: _____

Phone: _____

Fax: _____

Type of Facility: _____

WASTE INFORMATION

Please provide the distribution of the types of waste combusted in the incinerator each quarter (i.e., every three months):

___ % Hospital waste and medical/infectious waste (excluding wastes marked with a * below)

___ % Pathological waste, low-level radioactive waste, and chemotherapeutic waste*

___ % Other waste/fuel[1]

Does the incinerator accept waste from off-site? D Yes D No

___ **Lb/Hr** How many pounds of waste/fuel[1] are typically charged per hour?

___ **Hr/Day** How many hours per day is waste/fuel[1] charged into the incinerator?

___ **Lb/Qtr** How many pounds of waste/fuel[1] are typically charged per quarter?

Please attach an explanation of the methodology that will be used on an ongoing basis to estimate the percentages of waste types discussed above.

CERTIFICATION

I am authorized to make this submission on behalf of the owners and operators of _____ and I hereby certify under penalty of law that I have personally examined the foregoing and am familiar with the information contained in this document and all attachments, and that based on my inquiry of those individuals immediately responsible for obtaining the information, I believe the information is true, accurate and complete. I am aware that there are significant penalties for submitting false information including possible fines and imprisonment. In addition, it is my understanding that I am not subject to a Major Source Operating Permit under chapter 335-3-16 based solely on the requirements of ADEM Admin. Code r. 335-3-3-.04.

_____

(Signature of Responsible Official)

[1] Excluding fuels such as propane or natural gas used to maintain combustion chamber temperatures

EXEMPTION CLAIM FORM FOR INCINERATORS BURNING ONLY PATHOLOGICAL, LOW-LEVEL RADIOACTIVE, AND CHEMOTHERAPEUTIC WASTE

FACILITY INFORMATION

Facility Name: _____

Facility Address: _____

_____

_____

Contact Person Name: _____

Phone: _____

Fax: _____

Type of Facility: _____

WASTE INFORMATION

For periods when only pathological, low-level and/or chemotherapeutic waste(s) are combusted provide the distribution of the types of waste combusted in the incinerator each quarter (i.e., every three months):

____ **%** Pathological waste

____ **%** Low-level radioactive waste

____ **%** Chemotherapeutic waste

Does the incinerator accept waste from off-site? D Yes D No

____ **%** Percentage of time when only pathological, low-level, and/or chemotherapeutic waste(s) are combusted.

____ **Lb/Hr** During periods when only pathological, low-level, and/or chemotherapeutic waste is combusted, how much do you typically charge per hour?

____ **Hr/Day** During periods when only pathological, low-level, and/or chemotherapeutic waste is combusted, how many hours per day do you charge?

____ **Lb/Qtr** During periods when only pathological, low-level, and/or chemotherapeutic waste is combusted, how many pounds are burned on a quarterly basis?

Please attach an explanation of the methodology that will be used on an ongoing basis to determine the time periods when only pathological, low-level, and/or chemotherapeutic waste are burned.

CERTIFICATION

I am authorized to make this submission on behalf of the owners and operators of _____ and I hereby certify under penalty of law that I have personally examined the foregoing and am familiar with the information contained in this document and all attachments, and that based on my inquiry of those individuals immediately responsible for obtaining the information, I believe the information is true, accurate and complete. I am aware that there are significant penalties for submitting false information including possible fines and imprisonment. In addition, it is my understanding that I am not subject to a Major Source Operating Permit under chapter 335-3-16 based solely on the requirements of ADEM Admin. Code r. 335-3-3-.04.

_____

(Signature of Responsible Official)

APPENDIX I

Greenhouse Gas Global Warming Potentials

Name	CAS No.	Chemical formula	Global warming potential (100 yr.)
Carbon dioxide	124–38–9	CO_2	1
Methane	74–82–8	CH_4	25
Nitrous oxide	10024–97–2	N_2O	298
HFC–23	75–46–7	CHF_3	14,800
HFC–32	75–10–5	CH_2F_2	675
HFC–41	593–53–3	CH_3F	92
HFC–125	354–33–6	C_2HF_5	3,500
HFC–134	359–35–3	$C_2H_2F_4$	1,100
HFC–134a	811–97–2	CH_2FCF_3	1,430
HFC–143	430–66–0	$C_2H_3F_3$	353
HFC–143a	420–46–2	$C_2H_3F_3$	4,470
HFC–152	624–72–6	CH_2FCH_2F	53
HFC–152a	75–37–6	CH_3CHF_2	124
HFC–161	353–36–6	CH_3CH_2F	12
HFC–227ea	431–89–0	C_3HF_7	3,220
HFC–236cb	677–56–5	$CH_2FCF_2CF_3$	1,340
HFC–236ea	431–63–0	CHF_2CHFCF_3	1,370
HFC–236fa	690–39–1	$C_3H_2F_6$	9,810
HFC–245ca	679–86–7	$C_3H_3F_5$	693
HFC–245fa	460–73–1	$CHF_2CH_2CF_3$	1,030
HFC–365mfc	406–58–6	$CH_3CF_2CH_2CF_3$	794
HFC–43–10mee	138495–42–8	$CF_3CFHCFHCF_2CF_3$	1,640
Sulfur hexafluoride	2551–62–4	SF_6	22,800
Trifluoromethyl sulphur pentafluoride	373–80–8	SF_5CF_3	17,700
Nitrogen trifluoride	7783–54–2	NF_3	17,200
PFC–14 (Perfluoromethane)	75–73–0	CF_4	7,390

PFC–116 (Perfluoroethane)	76–16–4	C_2F_6	12,200
PFC–218 (Perfluoropropane)	76–19–7	C_3F_8	8,830
Perfluorocyclopropane	931–91–9	C-C_3F_6	17,340
PFC–3–1–10 (Perfluorobutane)	355–25–9	C_4F_{10}	8,860
Perfluorocyclobutane	115–25–3	C-C_4F_8	10,300
PFC–4–1–12 (Perfluoropentane)	678–26–2	C_5F_{12}	9,160
PFC–5–1–14 (Perfluorohexane)	355–42–0	C_6F_{14}	9,300
PFC–9–1–18	306–94–5	$C_{10}F_{18}$	7,500
HCFE–235da2 (Isoflurane)	26675–46–7	$CHF_2OCHClCF_3$	350
HFE–43–10pccc (H–Galden 1040x)	E1730133	$CHF_2OCF_2OC_2F_4OCHF_2$	1,870
HFE–125	3822–68–2	CHF_2OCF_3	14,900
HFE–134	1691–17–4	CHF_2OCHF_2	6,320
HFE–143a	421–14–7	CH_3OCF_3	756
HFE–227ea	2356–62–9	$CF_3CHFOCF_3$	1,540
HFE–236ca12 (HG–10)	78522–47–1	$CHF_2OCF_2OCHF_2$	2,800
HFE–236ea2 (Desflurane)	57041–67–5	$CHF_2OCHFCF_3$	989
HFE–236fa	20193–67–3	$CF_3CH_2OCF_3$	487
HFE–245cb2	22410–44–2	$CH_3OCF_2CF_3$	708
HFE–245fa1	84011–15–4	$CHF_2CH_2OCF_3$	286
HFE–245fa2	1885–48–9	$CHF_2OCH_2CF_3$	659
HFE–254cb2	425–88–7	$CH_3OCF_2CHF_2$	359
HFE–263fb2	460–43–5	$CF_3CH_2OCH_3$	11
HFE–329mcc2	67490–36–2	$CF_3CF_2OCF_2CHF_2$	919
HFE–338mcf2	156053–88–2	$CF_3CF_2OCH_2CF_3$	552

HFE–338pcc13 (HG–01)	188690–78–0	$CHF_2OCF_2CF_2OCHF_2$	1,500
HFE–347mcc3	28523–86–6	$CH_3OCF_2CF_2CF_3$	575
HFE–347mcf2	E1730135	$CF_3CF_2OCH_2CHF_2$	374
HFE–347pcf2	406–78–0	$CHF_2CF_2OCH_2CF_3$	580
HFE–356mec3	382–34–3	$CH_3OCF_2CHFCF_3$	101
HFE–356pcc3	160620–20–2	$CH_3OCF_2CF_2CHF_2$	110
HFE–356pcf2	E1730137	$CHF_2CH_2OCF_2CHF_2$	265
HFE–356pcf3	35042–99–0	$CHF_2OCH_2CF_2CHF_2$	502
HFE–365mcf3	378–16–5	$CF_3CF_2CH_2OCH_3$	11
HFE–374pc2	512–51–6	$CH_3CH_2OCF_2CHF_2$	557
HFE–449sl (HFE–7100) Chemical blend	163702–07–6 163702–08–7	$C_4F_9OCH_3$ $(CF_3)_2CFCF_2OCH_3$	297
HFE–569sf2 (HFE–7200) Chemical blend	163702–05–4 163702–06–5	$C_4F_9OC_2H_5$ $(CF_3)_2CFCF_2OC_2H_5$	59
Sevoflurane	28523–86–6	$CH_2FOCH(CF_3)_2$	345
HFE–356mm1	13171–18–1	$(CF_3)_2CHOCH_3$	27
HFE–338mmz1	26103–08–2	$CHF_2OCH(CF_3)_2$	380
(Octafluorotetramethy-lene)hydroxymethyl group	NA	$X\text{-}(CF_2)_4CH(OH)\text{-}X$	73
HFE–347mmy1	22052–84–2	$CH_3OCF(CF_3)_2$	343
Bis(trifluoromethyl)-methanol	920–66–1	$(CF_3)_2CHOH$	195
2,2,3,3,3-pentafluoropropanol	422–05–9	$CF_3CF_2CH_2OH$	42
PFPMIE (HT-70)	NA	$CF_3OCF(CF_3)CF_2OCF_2OCF_3$	10,300